HYPERTHERM®
A Hypertherm Associates Brand

XPR®

Preventive Maintenance Program

809490 - Revision 3

English

Register your new Hypertherm system

Benefits of registration

- **Safety:** Registration allows us to contact you in the unlikely event a safety or quality notification is required.
- **Education:** Registration gives you free access to online product training content via the Hypertherm Cutting Institute.
- **Confirmation of ownership:** Registration can serve as proof of purchase in case of an insurance loss.

Go to www.hypertherm.com/registration for easy and fast registration.

If you experience any problems with the product registration process, please contact registration@hypertherm.com.

For your records

Serial number: _____

Purchase date: _____

Distributor: _____

Maintenance notes: _____

_____

_____

XPR®

Preventive Maintenance Program

809490
Revision 3

English
Original Instructions

May 2025

Hypertherm, Inc.
Hanover, NH 03755 USA
www.hypertherm.com

Hypertherm, Inc.

21 Great Hollow Road, P.O. Box 5010
Hanover, NH 03755 USA
603-643-3441 Tel (Main Office)
603-643-5352 Fax (All Departments)
info@hypertherm.com (Main Office)
800-643-9878 Tel (Technical Service)
technical.service@hypertherm.com (Technical Service)
800-737-2978 Tel (Customer Service)
customer.service@hypertherm.com (Customer Service)

Hypertherm México, S.A. de C.V.

52 55 5681 8109 Tel
52 55 5681 7978 Tel
soporte.tecnico@hypertherm.com (Technical Service)

Hypertherm Plasmatechnik GmbH

Sophie-Scholl-Platz 5
63452 Hanau
Germany
00 800 33 24 97 37 Tel
00 800 49 73 73 29 Fax
31 (0) 165 596900 Tel (Technical Service)
00 800 4973 7843 Tel (Technical Service)
technicalservice.emeia@hypertherm.com (Technical Service)

Hypertherm (Singapore) Pte Ltd.

Solaris @ Kallang 164
164 Kallang Way #03-13
Singapore 349248, Republic of Singapore
65 6841 2489 Tel
65 6841 2490 Fax
marketing.asia@hypertherm.com (Marketing)
techsupportapac@hypertherm.com (Technical Service)

Hypertherm Japan Ltd.

Level 9, Edobori Center Building
2-1-1 Edobori, Nishi-ku
Osaka 550-0002 Japan
81 6 6225 1183 Tel
81 6 6225 1184 Fax
htjapan.info@hypertherm.com (Main Office)
techsupportapac@hypertherm.com (Technical Service)

Hypertherm Europe B.V.

Laan van Kopenhagen 100
3317 DM Dordrecht
Nederland
31 165 596907 Tel
31 165 596901 Fax
31 165 596908 Tel (Marketing)
31 (0) 165 596900 Tel (Technical Service)
00 800 4973 7843 Tel (Technical Service)
technicalservice.emeia@hypertherm.com (Technical Service)

Hypertherm (Shanghai) Trading Co., Ltd.

B301, 495 ShangZhong Road
Shanghai, 200231
PR China
86-21-80231122 Tel
86-21-80231120 Fax
86-21-80231128 Tel (Technical Service)
techsupport.china@hypertherm.com (Technical Service)

South America & Central America: Hypertherm Brasil Ltda.

55 11 5116-8015 Tel
tecnico.sa@hypertherm.com (Technical Service)

Hypertherm Korea Branch

#3904. APEC-ro 17. Heaundae-gu. Busan.
Korea 48060
82 (0)51 747 0358 Tel
82 (0)51 701 0358 Fax
marketing.korea@hypertherm.com (Marketing)
techsupportapac@hypertherm.com (Technical Service)

Hypertherm Pty Limited

Level 57, 25 Martin Place
Sydney NSW 2000, Australia
61 7 3103 1695 Tel
61 7 3219 9010 Fax
au.sales@hypertherm.com (Main Office)
techsupportapac@hypertherm.com (Technical Service)

Hypertherm (India) Thermal Cutting Pvt. Ltd

A-18 / B-1 Extension,
Mohan Co-Operative Industrial Estate,
Mathura Road, New Delhi 110044, India
91-11-40521201/ 2/ 3 Tel
91-11 40521204 Fax
htindia.info@hypertherm.com (Main Office)
technicalservice.emeia@hypertherm.com (Technical Service)

For training and education resources, go to the Hypertherm Cutting Institute (HCI) online at

www.hypertherm.com/hci

Safety information

WARNING! Before operating any Hypertherm equipment, read the safety instructions in your product's manual, the Safety and Compliance Manual (80669C), Waterjet Safety and Compliance Manual (80943C), and Radio Frequency Warning Manual (80945C). Failure to follow safety instructions can result in personal injury or in damage to equipment.

Copies of the manuals can come with the product in electronic and printed formats. Electronic copies are also on our website. Many manuals are available in multiple languages at www.hypertherm.com/docs.

Belden is a trademark of Belden Inc.

Core, CorePlus, Hypertherm, OptiMix, TorchConnect, VWI, XPR, XPR170, XPR300, and XPR460 are trademarks of Hypertherm, Inc. and may be registered in the United States and other countries. All other trademarks are the property of their respective holders.

Environmental stewardship is one of Hypertherm's core values, and it is critical to our success and our customers' success. We are striving to reduce the environmental impact of everything we do. For more information: www.hypertherm.com/environment.

©2018 – 2025 Hypertherm, Inc.

Contents

Electromagnetic Compatibility (EMC) **11**

Warranty **13**

1 Before you begin **15**

Overview of cutting system maintenance 15

Reference documents for preventive maintenance 15

Safety considerations for preventive maintenance 16

Remove the power from the cutting system 25

2 Cleaning and inspection schedule **29**

Cleaning and inspection schedule for preventive maintenance 29

Tasks for one-day intervals 30

Do a test of the inlet pressures 30

Examine the gas regulators 32

Examine the shield-water regulator (if applicable) 32

Examine the air filter 33

Examine the connections between the system components 33

Examine the coolant condition and level 34

Maintenance for torch and consumable parts 36

Remove the torch and consumable parts 36

Examine the water tube and torch 38

Examine the consumable parts 41

Examine the electrode for emitter wear..... 45
Examine the torch receptacle..... 48
Install the torch in the torch receptacle..... 49
Examine the torch lead..... 51
Tasks for one-week intervals..... 54
Do a gas leak test..... 54
Coolant flow measurements..... 56
Use the CNC or XPR web interface to measure coolant flow..... 57
Do a container test to measure coolant flow..... 58
Tasks for one-month intervals..... 60
Clean the internal surfaces of the system components..... 60
Examine the contactors..... 61
Examine the relays..... 63
Examine the gas line connections for leaks..... 65
Examine the ground connections..... 65
Grounding practices..... 66
Example grounding diagram with a plasma cutting system..... 69
Examine the table-to-workpiece connection..... 70
Tasks for six-month intervals – coolant maintenance..... 71
Coolant replacement and its significance..... 71
Make an estimate of the total coolant volume..... 71
Remove old coolant from the plasma cutting system..... 72

3 Component-replacement schedule..... 79

Component-replacement schedule and its significance..... 79
Conditions that have an effect on replacement schedules..... 85
Where you keep system components..... 85
Condition of the consumable parts..... 86
Condition of the air supply..... 87
Quantities of metal dust..... 88
Cut-cycle times..... 88

4 Record your cutting-system information.....91

System information.....91

System voltage.....91

Coolant requirements.....91

Notes.....92

Maintenance log for XPR cutting systems.....93

Electromagnetic Compatibility (EMC) introduction

Hypertherm's CE-marked equipment is built in compliance with standard EN60974-10. The equipment should be installed and used in accordance with the information below to achieve electromagnetic compatibility.

The limits required by EN60974-10 may not be adequate to completely eliminate interference when the affected equipment is in close proximity or has a high degree of sensitivity. In such cases it may be necessary to use other measures to further reduce interference.

This cutting equipment is designed for use only in an industrial environment.

Installation and use

The user is responsible for installing and using the plasma equipment according to the manufacturer's instructions.

If electromagnetic disturbances are detected then it shall be the responsibility of the user to resolve the situation with the technical assistance of the manufacturer. In some cases this remedial action may be as simple as earthing the cutting circuit, see Earthing of the workpiece. In other cases, it could involve constructing an electromagnetic screen enclosing the power source and the work complete with associated input filters. In all cases, electromagnetic disturbances must be reduced to the point where they are no longer troublesome.

Assessment of area

Before installing the equipment, the user shall make an assessment of potential electromagnetic problems in the surrounding area. The following shall be taken into account:

a. Other supply cables, control cables, signaling and telephone cables; above, below and adjacent to the cutting equipment.

b. Radio and television transmitters and receivers.

c. Computer and other control equipment.

d. Safety critical equipment, for example guarding of industrial equipment.

e. Health of the people around, for example the use of pacemakers and hearing aids.

f. Equipment used for calibration or measurement.

g. Immunity of other equipment in the environment. User shall ensure that other equipment being used in the environment is compatible. This may require additional protection measures.

h. Time of day that cutting or other activities are to be carried out.

The size of the surrounding area to be considered will depend on the structure of the building and other activities that are taking place. The surrounding area may extend beyond the boundaries of the premises.

Methods of reducing emissions

Mains supply

Cutting equipment must be connected to the mains supply according to the manufacturer's recommendations. If interference occurs, it may be necessary to take additional precautions such as filtering of the mains supply.

Consideration should be given to shielding the supply cable of permanently installed cutting equipment, in metallic conduit or equivalent. Shielding should be electrically continuous throughout its length. The shielding should be connected to the cutting mains supply so that good electrical contact is maintained between the conduit and the cutting power source enclosure.

Maintenance of cutting equipment

The cutting equipment must be routinely maintained according to the manufacturer's recommendations. All access and service doors and covers should be closed and properly fastened when the cutting equipment is in operation. The cutting equipment should not be modified in any way, except as set forth in and in accordance with the manufacturer's written instructions. For example, the spark gaps of arc striking and stabilizing devices should be adjusted and maintained according to the manufacturer's recommendations.

Cutting cables

The cutting cables should be kept as short as possible and should be positioned close together, running at or close to the floor level.

Equipotential bonding

Bonding of all metallic components in the cutting installation and adjacent to it should be considered.

However, metallic components bonded to the workpiece will increase the risk that the operator could receive a shock by touching these metallic components and the electrode (nozzle for laser heads) at the same time.

The operator should be insulated from all such bonded metallic components.

Earthing of the workpiece

Where the workpiece is not bonded to earth for electrical safety, nor connected to earth because of its size and position, for example, ship's hull or building steel work, a connection bonding the workpiece to earth may reduce emissions in some, but not all instances. Care should be taken to prevent the earthing of the workpiece increasing the risk of injury to users, or damage to other electrical equipment. Where necessary, the connection of the workpiece to earth should be made by a direct connection to the workpiece, but in some countries where direct connection is not permitted, the bonding should be achieved by suitable capacitances selected according to national regulations.

Note: The cutting circuit may or may not be earthed for safety reasons. Changing the earthing arrangements should only be authorized by a person who is competent to assess whether the changes will increase the risk of injury, for example, by allowing parallel cutting current return paths which may damage the earth circuits of other equipment. Further guidance is provided in IEC 60974-9, Arc Welding Equipment, Part 9: Installation and Use.

Screening and shielding

Selective screening and shielding of other cables and equipment in the surrounding area may alleviate problems of interference. Screening of the entire plasma cutting installation may be considered for special applications.

Attention

Genuine Hypertherm parts are the factory-recommended replacement parts for your Hypertherm system. Any damage or injury caused by the use of other than genuine Hypertherm parts may not be covered by the Hypertherm warranty, and will constitute misuse of the Hypertherm Product.

You are solely responsible for the safe use of the Product. Hypertherm does not and cannot make any guarantee or warranty regarding the safe use of the product in your environment.

General

Hypertherm, Inc. warrants that its Products shall be free from defects in materials and workmanship for the specific periods of time set forth herein and as follows: if Hypertherm is notified of a defect (i) with respect to the plasma power supply within a period of two (2) years from the date of its delivery to you, with the exception of Powermax brand power supplies, which shall be within a period of three (3) years from the date of delivery to you, and (ii) with respect to the torch and leads within a period of one (1) year from its date of delivery to you, with the exception of the HPRXD short torch with integrated lead, which shall be within a period of six (6) months from the date of delivery to you, and with respect to torch lifter assemblies within a period of one (1) year from its date of delivery to you, and with respect to Automation products one (1) year from its date of delivery to you, with the exception of the EDGE Connect CNC, EDGE Connect T CNC, EDGE Connect TC CNC, EDGE Pro CNC, EDGE Pro Ti CNC, MicroEDGE Pro CNC, and ArcGlide THC, which shall be within a period of two (2) years from the date of delivery to you, and (iii) with respect to HyIntensity fiber laser components within a period of two (2) years from the date of its delivery to you, with the exception of laser heads and beam delivery cables, which shall be within a period of one (1) year from its date of delivery to you.

All third-party engines, engine accessories, alternators, and alternator accessories are covered by the respective manufacturers' warranties and not covered by this warranty.

This warranty shall not apply to any Powermax brand power supplies that have been used with phase converters. In addition, Hypertherm does not warranty systems that have been damaged as a result of poor power quality, whether from phase converters or incoming line power. This warranty shall not apply to any product which has been incorrectly installed, modified, or otherwise damaged.

Hypertherm provides repair, replacement or adjustment of the Product as the sole and exclusive remedy, if and only if the warranty set forth herein properly is invoked and applies. Hypertherm, at its sole option, shall repair, replace, or adjust, free of charge, any defective Products covered by this warranty which shall be returned with Hypertherm's prior authorization (which shall not be unreasonably withheld), properly packed, to Hypertherm's place of business in Hanover, New Hampshire, or to an authorized Hypertherm repair facility, all costs, insurance and freight pre paid by the customer. Hypertherm shall not be liable for any repairs, replacement, or adjustments of Products covered by this warranty, except those made pursuant to this paragraph and with Hypertherm's prior written consent.

The warranty set forth above is exclusive and is in lieu of all other warranties, express, implied, statutory, or otherwise with respect to the Products or as to the results which may be obtained therefrom, and all implied warranties or conditions of quality or of merchantability or fitness for a particular purpose or against infringement. The foregoing shall constitute the sole and exclusive remedy for any breach by Hypertherm of its warranty.

Distributors/OEMs may offer different or additional warranties, but Distributors/OEMs are not authorized to give any additional warranty protection to you or make any representation to you purporting to be binding upon Hypertherm.

Patent indemnity

Except only in cases of products not manufactured by Hypertherm or manufactured by a person other than Hypertherm not in strict conformity with Hypertherm's specifications and in cases of designs, processes, formulae, or combinations not developed or purported to be developed by Hypertherm, Hypertherm will have the right to defend or settle, at its own expense, any suit or proceeding brought against you alleging that the use of the Hypertherm product, alone and not in combination with any other product not supplied by Hypertherm, infringes any patent of any third party. You shall notify Hypertherm promptly upon learning of any action or threatened action in connection with any such alleged infringement (and in any event no longer than fourteen (14) days after learning of any action or threat of action), and Hypertherm's obligation to defend shall be conditioned upon Hypertherm's sole control of, and the indemnified party's cooperation and assistance in, the defense of the claim.

Limitation of liability

In no event shall Hypertherm be liable to any person or entity for any incidental, consequential direct, indirect, punitive or exemplary damages (including but not limited to lost profits) regardless of whether such liability is based on breach of contract, tort, strict liability, breach of warranty, failure of essential purpose, or otherwise, and even if advised of the possibility of such damages. Hypertherm shall not be liable for any losses to Distributor based on down time, lost production or lost profits. It is the intention of the Distributor and Hypertherm that this provision be construed by a court as being the broadest limitation of liability consistent with applicable law.

National and local codes

National and local codes governing plumbing and electrical installation shall take precedence over any instructions contained in this manual. In no event shall Hypertherm be liable for injury to persons or property damage by reason of any code violation or poor work practices.

Liability cap

In no event shall Hypertherm's liability, if any, whether such liability is based on breach of contract, tort, strict liability, breach of warranties, failure of essential purpose or otherwise, for any claim, action, suit or proceeding (whether in court, arbitration, regulatory proceeding or otherwise) arising out of or relating to the use of the Products exceed in the aggregate the amount paid for the Products that gave rise to such claim.

Insurance

At all times you will have and maintain insurance in such quantities and types, and with coverage sufficient and appropriate to defend and to hold Hypertherm harmless in the event of any cause of action arising from the use of the products.

Transfer of rights

You may transfer any remaining rights you may have hereunder only in connection with the sale of all or substantially all of your assets or capital stock to a successor in interest who agrees to be bound by all of the terms and conditions of this Warranty. Within thirty (30) days before any such transfer occurs, you agree to notify in writing Hypertherm, which reserves the right of approval. Should you fail timely to notify Hypertherm and seek its approval as set forth herein, the Warranty set forth herein shall be null and void and you will have no further recourse against Hypertherm under the Warranty or otherwise.

Waterjet product warranty coverage

Product	Parts coverage
HyPrecision pumps	27 months from the ship date, or 24 months from the date of proven installation, or 4,000 hours, whichever occurs first
PowerDredge abrasive removal system	15 months from the ship date or 12 months from the date of proven installation, whichever occurs first
EcoSift abrasive recycling system	15 months from the ship date or 12 months from the date of proven installation, whichever occurs first
Abrasive metering devices	15 months from the ship date or 12 months from the date of proven installation, whichever occurs first
On/off valve air actuators	15 months from the ship date or 12 months from the date of proven installation, whichever occurs first
Diamond orifices	600 hours of use with the use of a thimble filter and compliance with Hypertherm's water quality requirements

Consumable parts are not covered by this warranty. Consumable parts include, but are not limited to, high-pressure water seals, check valves, cylinders, bleed-down valves, low-pressure seals, high-pressure tubing, low- and high-pressure water filters and abrasive collection bags. All third-party pumps, pump accessories, hoppers, hopper accessories, dryer boxes, dryer box accessories and plumbing accessories are covered by the respective manufacturers' warranties and not covered by this warranty.

1 Before you begin

Overview of cutting system maintenance

Hypertherm® cutting systems can operate in harsh conditions for many years. For satisfactory cutting system performance, decreased operation costs, and longer cutting system life, it is important to do all maintenance procedures on schedule.

The Preventive Maintenance Program (PMP) explains how to do preventive maintenance tasks. The PMP has two parts: a cleaning and inspection schedule and a component-replacement schedule.

If you have questions about the maintenance of your cutting system, speak to your cutting machine supplier or regional Hypertherm Technical Service team. You can find contact information for each regional office at www.hypertherm.com on the "Contact us" page.

Reference documents for preventive maintenance

The PMP refers to your cutting system's instruction manual.

- *XPR170 Instruction Manual (810060)*
- *XPR300 Instruction Manual (809480)*
- *XPR460 Instruction Manual (811530)*

The most recent revisions of technical documents are available at www.hypertherm.com/docs.

Safety considerations for preventive maintenance

Before you start maintenance tasks, make sure to read, understand, and comply with all safety instructions.

WARNING

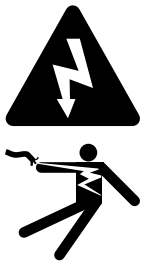

ELECTRIC SHOCK CAN KILL

Voltages in the cutting system can cause serious electric shock. Electric shock can seriously injure or kill you.

When the line-disconnect switch is in the ON position, there is line voltage throughout the cutting system. Use extreme caution if you do diagnosis or maintenance tasks when the line-disconnect switch is in the ON position.

WARNING

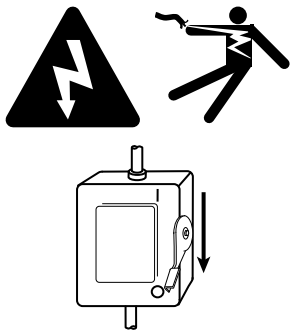

ELECTRIC SHOCK CAN KILL

If the line-disconnect switch is not in the OFF position you can get a serious electric shock. Electric shock can seriously injure or kill you.

The line-disconnect switch must be in the OFF position before you connect the power cord to the cutting system. It must REMAIN in the OFF position until all installation steps are complete. In the United States, use a "lock out/tag out" procedure until installation is complete. In other countries, follow the appropriate national and local safety procedures. Refer to the *Safety and Compliance Manual (80669C)* for more safety information.

⚠ WARNING

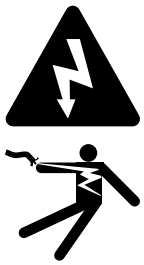

ELECTRIC SHOCK CAN KILL

The plasma power supply contains dangerous electric voltages that can seriously injure or kill you. Even if the plasma power supply is turned OFF, you can still get a serious electric shock if the plasma power supply remains connected to an electric power source.

Use extreme caution if you do diagnosis or maintenance tasks when the plasma power supply remains connected to an electric power source and the outer cover or panels are removed. All work that requires removal of the plasma power supply outer cover or panels must be done by a qualified technician. Refer to the *Safety and Compliance Manual (80669C)* for more safety information.

⚠ WARNING

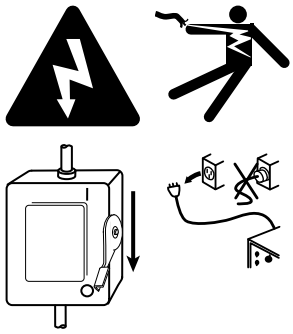

ELECTRIC SHOCK CAN KILL

Disconnect electric power before doing installation or maintenance. The line-disconnect switch must STAY in the OFF position until all of the installation or maintenance steps are complete. Refer to the *Safety and Compliance Manual (80669C)* for more safety information.

WARNING

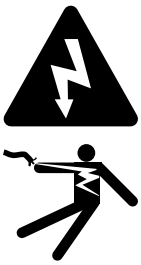

ELECTRIC SHOCK CAN KILL

Voltages at the terminal block and contactors can cause injury or death.

When the line-disconnect switch is in the ON position, there is line voltage at the contactor and the power distribution Printed Circuit Board (PCB). Use extreme caution when you measure the primary power in these areas.

WARNING

MACHINE MOTION CAN CAUSE INJURY

The end-use customer and the cutting machine supplier are responsible for providing protection against the hazardous moving parts of this cutting system. Read and follow the instruction manual provided by the cutting machine supplier. Refer to the *Safety and Compliance Manual (80669C)* for more safety information.

⚠ WARNING

HYDROGEN GAS CAN CAUSE AN EXPLOSION OR FIRE

Hydrogen is a flammable gas that can cause an explosion or fire if it is not removed.

Keep flames away from cylinders and hoses that contain hydrogen. Keep flames and sparks away from the torch when using hydrogen as a plasma gas.

Consult your local safety, fire, and building code requirements for the storage and use of hydrogen.

Hypertherm recommends that you install an exhaust ventilation system to remove the hydrogen-enriched atmosphere that can collect when hydrogen is used as the plasma gas for cutting.

Flashback arrestors are REQUIRED to stop the spread of fire to the supply gases (unless a flashback arrestor is not available for a specific gas or pressure).

As an installer or user, you must supply the exhaust ventilation and flashback arrestors for your cutting system. You can get them from your cutting machine supplier.

⚠ WARNING

OXYGEN GAS CAN CAUSE A FIRE HAZARD

If you use oxygen as the plasma gas for cutting, it can cause a potential fire hazard due to the oxygen-enriched atmosphere that collects. A fire can occur if oxygen is not removed.

Hypertherm recommends that you install an exhaust ventilation system to remove the oxygen-enriched atmosphere that can collect when oxygen is used as the plasma gas for cutting.

Flashback arrestors are REQUIRED to stop the spread of fire to the supply gases (unless a flashback arrestor is not available for a specific gas or pressure).

As an installer or user, you must supply the exhaust ventilation and flashback arrestors for your cutting system. You can get them from your cutting machine supplier.

⚠ WARNING

INCORRECT SUPPLY-GAS CONNECTIONS CAN CAUSE AN EXPLOSION OR FIRE

An explosion or fire can occur if a supply-gas hose is connected to the wrong port on a gas connect console.

NEVER connect a supply gas to a hose, connection, or fitting that is not designed for that gas type or pressure.

WARNING

MISSING CHECK VALVES CAN CAUSE AN EXPLOSION OR FIRE

An explosion or fire can occur if the cutting system is operated without check valves.

Never remove a check valve.

WARNING

COOLANT CAN BE IRRITATING TO SKIN AND EYES AND HARMFUL OR FATAL IF SWALLOWED

Propylene glycol and benzotriazole are irritating to skin and eyes, and harmful or fatal if swallowed.

When you come into contact, flush skin or eyes with water. If swallowed, seek immediate medical attention.

CAUTION

WET FLOOR

If you put too much coolant in the reservoir, the coolant can spill onto the floor. Coolant can cause floors to become slippery.

Be careful not to put too much coolant in the reservoir.

⚠ CAUTION

MOVING BLADES CAN CAUSE INJURY

Keep your hands away from moving parts.

NOTICE

AUTOMOTIVE ANTIFREEZE CAN CAUSE DAMAGE TO THE TORCH COOLANT SYSTEM

Antifreeze contains chemicals that can cause damage to the torch coolant system.

Never use automotive antifreeze as an alternative to Hypertherm coolant.

NOTICE

LOW COOLANT LEVELS CAN DAMAGE THE CUTTING SYSTEM AND COOLANT PUMP

There is a risk of serious damage to the cutting system and to the coolant pump if you operate the cutting system with no coolant or with low coolant. If your coolant pump is damaged, pump replacement can be necessary.

Never operate the cutting system if you get a low coolant level notice.

NOTICE

USE THE CORRECT COOLANT

If you use an incorrect coolant, it can cause damage to the cutting system.

Refer to the coolant requirement specifications for your plasma cutting system.

NOTICE

PTFE TAPE CAN CAUSE CLOGGED VALVES, REGULATORS, AND TORCHES

Never use PTFE tape on any joint preparation. Use only a liquid or paste thread sealant on male thread ends.

NOTICE

DIRTY, OILY AIR CAN CAUSE DAMAGE TO THE AIR FILTER BOWL

Some air compressors use synthetic lubricants that contain esters. Esters can cause damage to the polycarbonates in the air filter bowl.

Add more gas filtration if necessary.

NOTICE

INCORRECT HOSES, CONNECTIONS, OR FITTINGS CAN CAUSE DAMAGE AND BAD PERFORMANCE

Noncompliant hoses, hose connections, or hose fittings can crack or leak. Incorrect fittings can cause malfunctions with the internal valves because contaminants can enter the valves through damaged or loose fittings.

All hoses, hose connections, and hose fittings used for supply-gas plumbing must be designed for use with the appropriate gas and pressure rating. NEVER connect a supply gas to a hose, connection, or fitting that is not designed for that gas type or pressure. A replacement hose, connection, or fitting must meet all applicable regulations and codes.

NOTICE

INCORRECT SUPPLY-GAS FITTINGS CAN CAUSE VALVES TO MALFUNCTION

If you alter or replace the fittings, it can cause the internal valves to malfunction if particulates get inside.

Do not change or replace the supply-gas fittings on the gas connect console.

NOTICE

INCORRECT SUPPLY-GAS CONNECTIONS CAN CAUSE CUTTING SYSTEM DAMAGE

Incorrect connections can reduce the life of consumables and cause damage to the torch head, torch receptacle, torch leads, and torch connect console.

NEVER connect a supply gas to a hose, connection, or fitting that is not designed for that gas type or pressure.

NOTICE

INCORRECT SUPPLY-GAS CONNECTIONS CAN CAUSE BAD PERFORMANCE

Cutting system performance can be bad if a supply-gas hose is connected to the wrong port on a gas connect console.

NEVER connect a supply gas to a hose, connection, or fitting that is not designed for that gas type or pressure.

NOTICE

INCORRECT GAS PRESSURES CAN CAUSE BAD PERFORMANCE

Gas leaks or pressure and flow rates that are outside of recommended ranges can cause problems with system performance, result in bad cut quality, and shorten the life of consumables.

If the quality of the gas is bad or if the pressure setting is incorrect, it can decrease cut quality, cut speed, and cut thickness capabilities.

Make sure the incoming gas pressure aligns with system specifications.

NOTICE

FOR THE BEST CUT QUALITY AND CONSUMABLE LIFE USE THE CORRECT LEAD LENGTHS

Cut quality and the lifespan of consumables will be decreased if you change the lead lengths.

The manufactured lengths of torch and console leads are critical for system performance. Never change the lengths of leads.

NOTICE

A LOOSE OR OVERTIGHTENED ELECTRODE CAN CAUSE DAMAGE TO THE TORCH

If you do not correctly install and tighten the electrode, torch damage can occur.

A tool is necessary to correctly install and tighten the torch electrode. Do not use your hands. Hypertherm recommends tightening the electrode to a torque value of 2.3 N·m – 2.8 N·m (20 lbf·in – 25 lbf·in).

Remove the power from the cutting system

It is necessary to remove the power from the cutting system for many procedures.

⚠ WARNING

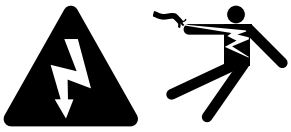

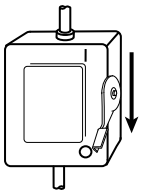

ELECTRIC SHOCK CAN KILL

If the line-disconnect switch is not in the OFF position you can get a serious electric shock. Electric shock can seriously injure or kill you.

The line-disconnect switch must be in the OFF position before you connect the power cord to the cutting system. It must REMAIN in the OFF position until all installation steps are complete. In the United States, use a "lock out/tag out" procedure until installation is complete. In other countries, follow the appropriate national and local safety procedures. Refer to the *Safety and Compliance Manual (80669C)* for more safety information.

⚠ WARNING

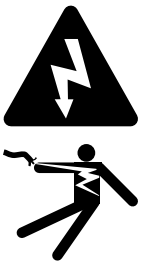

ELECTRIC SHOCK CAN KILL

The plasma power supply contains dangerous electric voltages that can seriously injure or kill you. Even if the plasma power supply is turned OFF, you can still get a serious electric shock if the plasma power supply remains connected to an electric power source.

Use extreme caution if you do diagnosis or maintenance tasks when the plasma power supply remains connected to an electric power source and the outer cover or panels are removed. All work that requires removal of the plasma power supply outer cover or panels must be done by a qualified technician. Refer to the *Safety and Compliance Manual (80669C)* for more safety information.

⚠ WARNING

MACHINE MOTION CAN CAUSE INJURY

The end-use customer and the cutting machine supplier are responsible for providing protection against the hazardous moving parts of this cutting system. Read and follow the instruction manual provided by the cutting machine supplier. Refer to the *Safety and Compliance Manual (80669C)* for more safety information.

Before you begin: Before you remove the power from the cutting system, it can be helpful to move the torch to the edge of the cutting table and raise the torch lifter to its highest point. This gives you easier access to the torch and consumable parts.

1. Set the line-disconnect switch to the OFF position.
2. If the cutting system is not hard wired, disconnect the main power from the electric power.

   If the cutting system is hard wired, you cannot disconnect the main power from the electric power.

   Even if you remove the power from the cutting system, you can still get a serious electric shock if the plasma power supply stays connected to an electric power source. Use extreme care during service and maintenance when the cutting system is connected to electricity.
3. Make sure that the power-indicator Light Emitting Diode (LED) is not illuminated on the plasma power supply and cooler if applicable, gas connect console, and torch connect console.

2 Cleaning and inspection schedule

Cleaning and inspection schedule for preventive maintenance

The cleaning and inspection schedule for plasma cutting systems shows the intervals of preventive maintenance tasks.

Usually, operators can do the cleaning and inspection tasks for the one-day and one-week intervals. Qualified personnel must do the cleaning and inspection tasks for the one-month, six-month, and one-year intervals.

Table 1 - Example checklist of inspection, preventive maintenance, and cleaning tasks

Maintenance task	Day	Week	Month	6 Months
Do a test of the inlet pressures	X			
Examine the gas regulators	X			
Examine the shield water regulator (if applicable)	X			
Examine the air filter	X			
Examine the connections between system components	X			
Examine the coolant level and condition	X			
Examine the water tube and torch	X			
Examine the consumable parts	X			
Examine the torch receptacle	X			

Table 1 - Example checklist of inspection, preventive maintenance, and cleaning tasks (continued)

Maintenance task	Day	Week	Month	6 Months
Examine the torch lead	X			
Do a gas leak test		X		
Do the weekly coolant check (coolant flow measurements)		X		
Clean the internal surfaces of the system components			X	
Examine the contactors			X	
Examine the relays			X	
Examine the gas line connections for leaks			X	
Examine the ground connections			X	
Examine the table-to-workpiece connection			X	
Do coolant system maintenance				X

Tasks for one-day intervals

Do a test of the inlet pressures

While the gas flows, do a test of gas pressures in preflow, cutflow, and pierceflow modes to find if the incoming gas pressure is in a range that complies with the inlet-pressure requirements for your cutting system.

Before you begin: Make sure that the cutting system is prepared for operation while the gas flows.

1. Use the Computer Numerical Control (CNC) or **Gas System** screen on the XPR® web interface to see the most current measurements of gas pressure.

   For information about how to see gas pressures on your CNC, refer to the instruction manual that came with your CNC. For information about how to see gas pressures on the XPR web interface, refer to the instruction manual that came with your cutting system.

2. If a gas pressure is too high or too low, use the regulators to adjust the pressure to the correct range.

Table 2 - Gas quality, pressure, and flow requirements

Gas	Quality	System inlet pressure (during gas flow [1])	Flow rate
O_2 (oxygen)	99.5% pure, clean, dry, oil-free	Core™, CorePlus™, VWI™: 7.5 bar ± 0.4 (110 psi ± 5) OptiMix™: 7.9 bar ± 0.4 (115 psi ± 5)	XPR170®, XPR300®: 71 slpm (150 scfh) XPR460®: 240 scfh (114 slpm)
N_2 (nitrogen)	99.99% pure, clean, dry, oil-free	Core, CorePlus, VWI: 7.5 bar ± 0.4 (110 psi ± 5) OptiMix: 8.3 bar ± 0.4 (120 psi ± 5)	181 slpm (380 scfh)
Air [2]	Clean, dry, oil free consistent with 8573-1:2010 Class 1.4.2	Core, CorePlus, VWI: 7.5 bar ± 0.4 (110 psi ± 5) OptiMix: 7.9 bar ± 0.4 (115 psi ± 5)	XPR170, XPR300: 118 slpm (250 scfh) XPR460: 128 slpm (270 scfh)
H_2 (hydrogen)	99.995% pure	OptiMix: 8.3 bar ± 0.4 (120 psi ± 5)	50 slpm (105 scfh)
Ar (argon)	99.99% pure; clean, dry, oil-free	CorePlus, VWI: 7.5 bar ± 0.4 (110 psi ± 5) OptiMix: 8.3 bar ± 0.4 (120 psi ± 5)	XPR170, XPR300: 118 slpm (250 scfh) [3] XPR460: 181 slpm (380 schf) [4]
F5 (95% nitrogen, 5% hydrogen)	99.98% pure	VWI: 7.5 bar ± 0.4 (110 psi ± 5) OptiMix: 7.9 bar ± 0.4 (115 psi ± 5)	40 slpm (85 scfh)

1 When there is **no** gas flow, make sure that the pressure at the gas inlet connection is less than 8.6 bar (125 psi) to prevent system alerts.

2 Air compressors must remove oil before they supply air to the cutting system.

3 Flow rate during argon marking and argon-assisted piercing.

4 Flow rate during argon marking and argon-assisted piercing and during stainless steel cutting with an OptiMix gas connect console.

Examine the gas regulators

Before cutting system operation, examine the regulators on the supply gases to make sure that the pressures and flow rates are correct. Adjust the regulators on the supply gases, if necessary.

1. Make sure the gas pressures and flow rates are within the recommended range.

   Refer to Table 2 on page 31.

2. Adjust the regulators on the supply gases, if necessary.

Examine the shield-water regulator (if applicable)

Before cutting system operation, examine the regulator on the shield water supply to make sure that the pressure and flow rate are correct. Adjust the regulator on the water supply, if necessary.

1. Make sure that the water pressure and flow rate is within the recommended range.

Table 3 - Quality, pressure, and flow requirements for shield water

Quality [1]	Minimum and maximum pressure	Flow rate required
Deionized water is **not** recommended to use as shield water. Deionized water will react with the copper components in the system and result in decreased life of components and consumables. Hypertherm recommends that you contact a water-quality expert for guidance.	2.76 bar (40 psi) minimum 8.27 bar (120 psi) maximum	35 L/h (9.4 U.S. gal/h)

1 Water that does not meet minimum purity specifications can cause unwanted deposits on the torch nozzle and shield. These deposits can alter the water flow and produce an unstable arc.

2. Adjust the regulator on the water supply, if necessary.

   The regulator on the gas connect console cannot be adjusted.

   For more information about shield-water requirements, refer to the instruction manual that came with your cutting system.

Examine the air filter

- Examine the air filter in the gas connect console for contamination.

If you find any moisture	Replace the filter.
If you find a small or moderate quantity of dust or small particles [1]	Use compressed air or suction to clean the air filter.
If you find a large quantity of dust or large particles [1]	Replace the air filter.

1 Refer to Figure 1 on page 33 for an example.

Figure 1 - Contaminated air filter

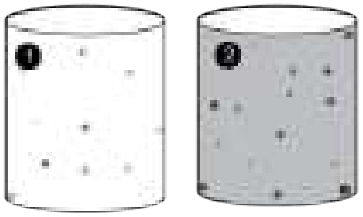

1 A moderate quantity of solid contamination

2 A large quantity of solid contamination

Examine the connections between the system components

1. Examine all hoses, cables, and leads for these conditions:
   a. Scrapes, cuts, or holes
   b. Chemical spills or burns
   c. Kinks or bends
2. Replace the hose, cable, or lead if you find signs of damage or kinks and bends.

   Refer to the *Parts List* in the instruction manual that came with your cutting system.
3. Examine all of the fittings that connect the hoses, cables, and leads:

If you find loose connections	Tighten loose connections, but do not tighten the connections too much.

If you find signs of damage or excess wear	Get a replacement hose, cable, or lead from Hypertherm.

Individual fittings for external hoses, cables, and leads are **not** replaceable. If you find a problem with an integrated fitting, you must replace the entire hose, cable, or lead that comes with the integrated fitting.

4. Make sure that the hoses, cables, and leads do not twist or kink during system operation and torch movement. Put the hoses, cables, and leads in different positions if necessary.

Examine the coolant condition and level

Examine the coolant condition and level in the plasma cutting system. Replace the coolant if you find copper pieces or debris or if the coolant is clear and not the original pink color. Add coolant if the level is low.

Before you begin:

- For the XPR170 and XPR300, the location of the coolant reservoir is in the plasma power supply.
- For the XPR460, the location of the coolant reservoir is in the cooler.

1. Remove the cap from the reservoir inlet found on top of the reservoir.
2. Examine the reservoir internally for coolant contamination.

If you find any contamination	Replace all of the coolant. Refer to Remove old coolant from the plasma cutting system on page 72.
If you do not find contamination	Continue to the next step.

3. If the coolant level is low, add coolant (028872) until the coolant is at the recommended fill level.

- ☐ For the XPR170 and XPR300, if the coolant is below the base of the inlet spout, add coolant to the reservoir until the coolant is at the base of the inlet spout.

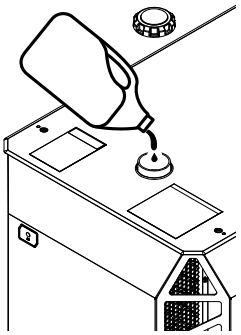

- ☐ For the XPR460, if the coolant is below the maximum fill line on the coolant-level view window on the cooler, add coolant to the reservoir until the coolant level is at the maximum fill line.

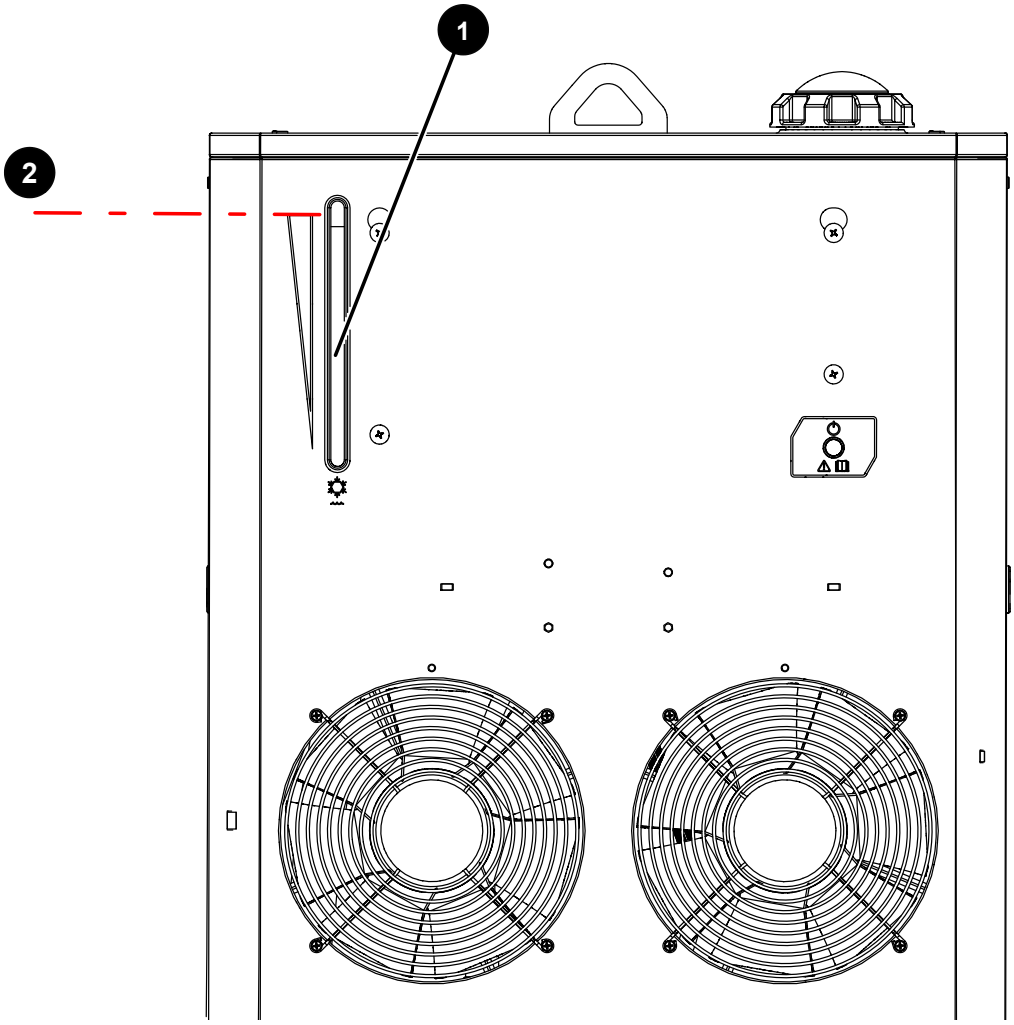

1 Coolant-level view window

2 Maximum fill line

CAUTION

WET FLOOR

If you put too much coolant in the reservoir, the coolant can spill onto the floor. Coolant can cause floors to become slippery.

Be careful not to put too much coolant in the reservoir.

4. Install the cap on the coolant reservoir.

Maintenance for torch and consumable parts

Remove the torch and consumable parts

It can be necessary to remove the torch and consumable parts for replacement, maintenance, or troubleshooting.

WARNING

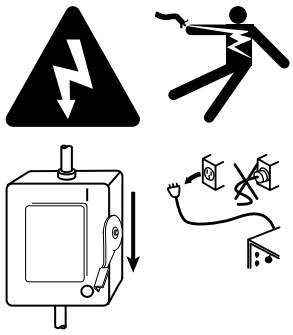

ELECTRIC SHOCK CAN KILL

Disconnect electric power before doing installation or maintenance. The line-disconnect switch must STAY in the OFF position until all of the installation or maintenance steps are complete. Refer to the *Safety and Compliance Manual (80669C)* for more safety information.

WARNING

HOT PARTS CAN CAUSE SEVERE BURNS

Let the temperature of the plasma power supply decrease before you do any maintenance.

NOTICE

A LOOSE OR OVERTIGHTENED ELECTRODE CAN CAUSE DAMAGE TO THE TORCH

If you do not correctly install and tighten the electrode, torch damage can occur.

A tool is necessary to correctly install and tighten the torch electrode. Do not use your hands. Hypertherm recommends tightening the electrode to a torque value of 2.3 N·m – 2.8 N·m (20 lbf·in – 25 lbf·in).

1. Remove the power from the cutting system:
   a. Set the line-disconnect switch to the OFF position.
   b. Make sure that the power-indicator LED is **not** illuminated on the plasma power supply or other system components.
2. Loosen the torch coupler nut to release the torch from the torch receptacle.

   The torch and consumable parts can be hot. Put on gloves to prevent burns.
3. Put the torch and torch receptacle on a surface that is:
   - ☐ Clean
   - ☐ Dry
   - ☐ Oil-free
4. Remove the consumable parts as shown:
   a. Use your hands to pull and twist off the swirl ring.
   b. Use the consumable-parts tool to turn the electrode counterclockwise.
   c. Hold the tool tightly and pull straight out to correctly remove the electrode.

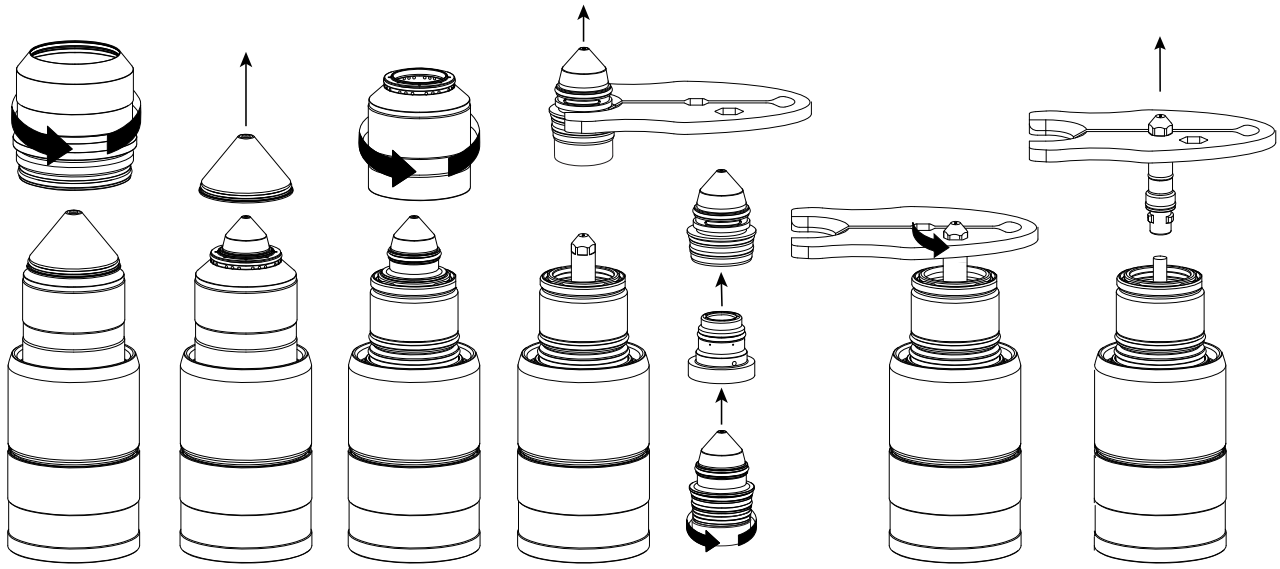

5. Put the consumable parts on a surface that is:
   - ☐ Clean
   - ☐ Dry
   - ☐ Oil-free

Examine the water tube and torch

Before you begin:

- Remove the power from the cutting system on page 25.
- Remove the torch and consumable parts on page 36.

1. Remove the water tube from the torch main body.

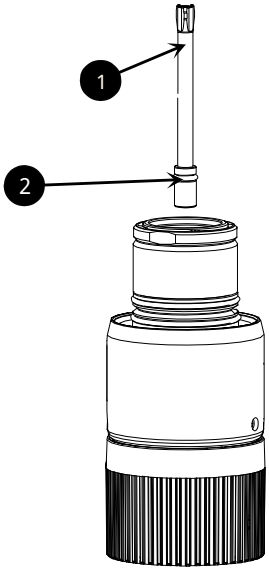

1 Water tube

2 O-ring

2. Examine the water tube for bends and pitting.

If you find bends or pitting	Replace the water tube, and then go to step 4 on page 39.
If you do not find bends or pitting	Continue to the next step.

3. Examine the O-ring on the water tube.

If you find signs of damage	Replace the O-ring. Torch rebuild kits are available from Hypertherm.
If you do not find signs of damage and the O-ring is dry	Apply a thin layer of silicone lubricant (027055). The O-ring must be shiny. Too much lubricant can prevent water-tube movement. Remove unwanted lubricant if found.

4. Examine the torch main body and torch insulator for cracks.

If you find cracks	Replace the torch main body.
If you do not find cracks	Continue to the next step.

5. Examine the nozzle and electrode-mating surfaces on the torch main body for damage or pitting.

If you find signs of damage or pitting	Replace the torch main body.
If you do not find signs of damage or pitting	Continue to the next step.

6. Clean the torch main body if you did not replace it during step 4 on page 39 or if you think it is dirty:
   a. Use a clean paper towel or lint-free cloth to clean the internal and external surfaces of the torch main body.
   b. Use a cotton swab to clean internal surfaces that are not easy to touch.
   c. Make sure that you do not let fibers stay on the internal surfaces of the torch main body.
   d. Use compressed air to remove remaining particles from the torch main body.

7. Examine the O-rings on the torch main body.

If you find signs of damage	Replace the O-ring. Torch rebuild kits are available from Hypertherm.
If you do not find signs of damage and the O-ring is dry	Apply a thin layer of silicone lubricant (027055). The O-ring must be shiny. Too much lubricant can prevent gas flow. Remove unwanted lubricant if found.
If the O-ring has too much lubricant	Use a clean, lint-free cloth to remove unwanted lubricant.

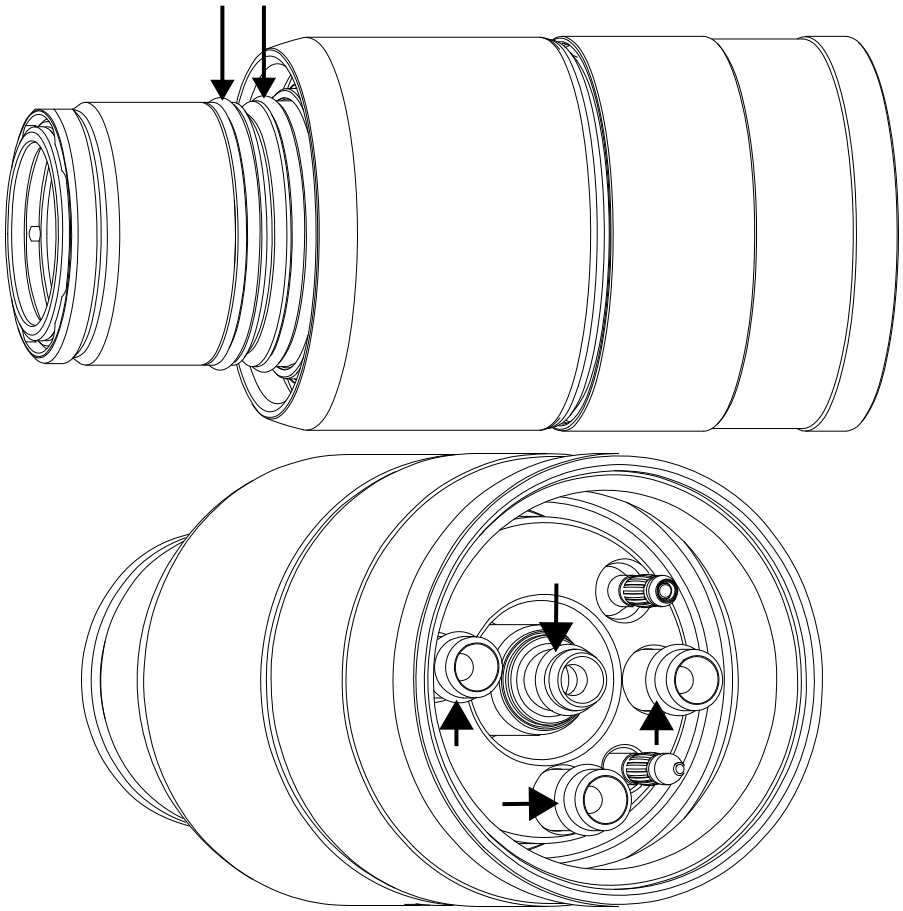

8. Install a water tube in the torch.

   When correctly installed, the water tube can feel loose. Any side-to-side looseness will go away after electrode installation.

What to do next: Examine the consumable parts on page 41.

Examine the consumable parts

Examine and clean consumable parts of the XPR plasma cutting system, look for signs of damage and correct lubrication of O-rings. Replace any consumable parts that have signs of damage and make sure that all components are clean before assembly.

Before you begin:

- Remove the power from the cutting system on page 25
- Remove the torch and consumable parts on page 36

1. Examine the consumable parts for signs of damage.

Table 4 - Inspection tasks for consumable parts

Inspect	Look for	Action if found
Shield cap 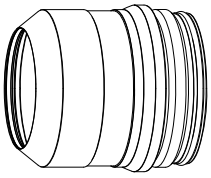	Erosion Cracks Melted or missing surfaces Damaged O-rings	Replace the shield cap.
	Molten metal attached	If there is no damage to the shield cap, you can remove the molten metal. If there is damage, replace the shield cap.
	Dry O-rings	Apply a thin layer of silicone lubricant (027055) to O-rings that are dry.
Shield 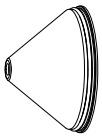	A center hole that is not circular Damage O-rings	Replace the shield.
	Over-lubricated O-rings	Use a clean, lint-free cloth to remove unwanted lubricant.
	Dry O-rings	Apply a thin layer of silicone lubricant (027055) to O-rings that are dry.
Nozzle retaining cap 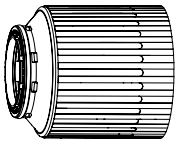	Damage Bad cut quality after replacing other consumables Damage O-rings	Replace the nozzle retaining cap.
	Dry O-rings	Apply a thin layer of silicone lubricant (027055) to O-rings that are dry.

Table 4 - Inspection tasks for consumable parts (continued)

Inspect	Look for	Action if found
Nozzle 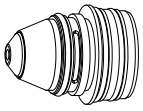	Erosion Blocked gas holes A center hole that is not circular Damaged O-rings	Replace the nozzle.
	Over-lubricated O-rings	Use a clean, lint-free cloth to remove unwanted silicone lubricant.
	Dry O-rings	Apply a thin layer of silicone lubricant (027055) to O-rings that are dry.
Swirl ring	Chips or cracks Blocked gas holes Damaged O-rings	Replace the swirl ring.
	Dirt or debris	Use compressed air to remove dirt or debris. Replace the swirl ring if you find signs of damage.
	Over-lubricated O-rings	Use a clean, lint-free cloth to remove unwanted silicone lubricant.
	Dry O-rings	Apply a thin layer of silicone lubricant (027055) to O-rings that are dry.
Electrode 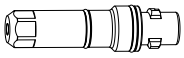	Damaged O-rings	Replace the electrode. Use the electrode torque tool (429013) to correctly tighten the electrode.
	Over-lubricated O-rings	Use a clean, lint-free cloth to remove unwanted lubricant.
	Dry O-rings	Apply a thin layer of silicone lubricant (027055) to O-rings that are dry.
	Emitter wear For guidance about how to identify emitter wear, refer to Examine the electrode for emitter wear on page 45.	Replace the electrode **and nozzle**. Use the electrode torque tool (429013) to correctly tighten the electrode.

If an electrode needs replacement because of emitter wear, **always replace the nozzle at the same time as the electrode**. Use the electrode torque tool (429013) to correctly tighten the electrode.

2. Clean the consumable parts that do not need replacement:
   a. Use a clean, lint-free cloth to wipe the internal and external surfaces.
   b. Use compressed air to remove debris from internal and external surfaces.

      The nozzle retaining cap can keep debris. Make sure to fully clean the retaining cap thoroughly.
   c. Use **clean water** if you choose to wash consumables parts in water.

      Use water from the faucet to soak or rinse them. **Never use the water from a cutting table** to wash consumable parts. Cutting table water has contaminants that will cause damage to the consumable parts.
3. Apply a thin layer of silicone lubricant (027055) to each O-ring on all consumable parts.

   The O-rings should be shiny. Too much lubricant can prevent gas flow. Remove excess lubricant if found.

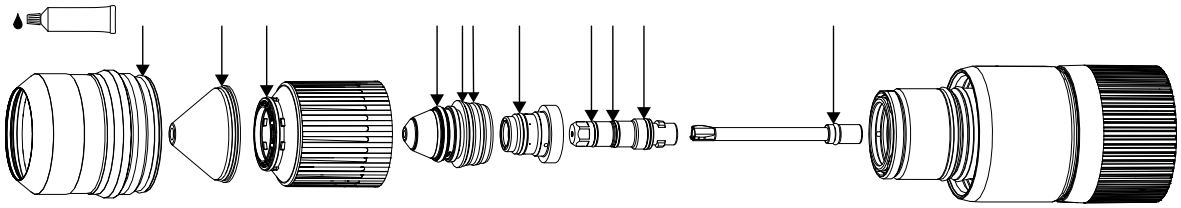

4. Install the consumables on the torch as shown.

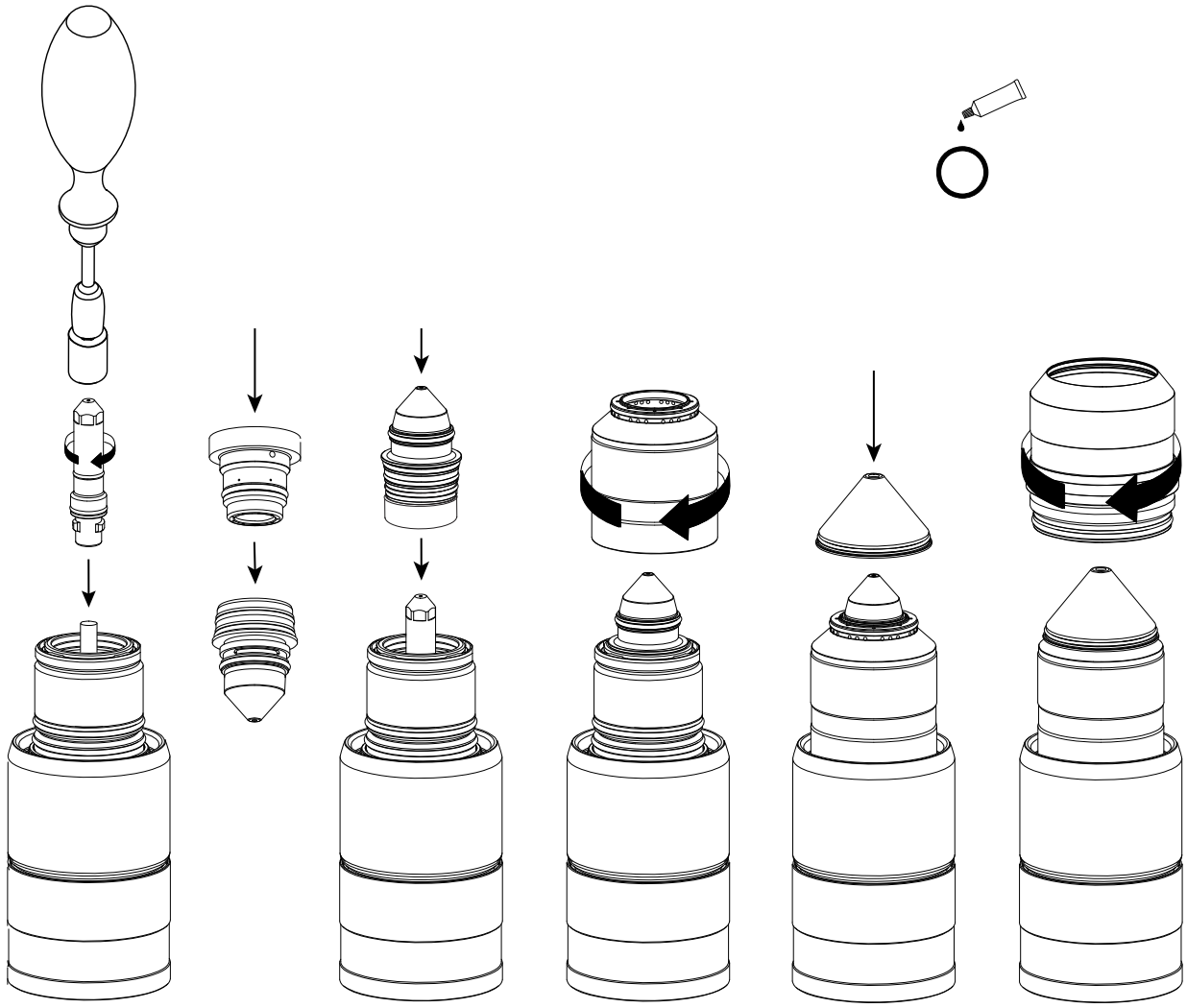

What to do next: Examine the torch receptacle on page 48.

Examine the electrode for emitter wear

Emitter wear can indicate when to replace the electrode. Increasing the number of starts and the arc-on time can cause the emitter to wear more quickly. Emitter wear can cause the cut quality to decrease. Your cut-quality requirements will indicate when to replace the electrode.

Figure 2 - Example of a new electrode

Figure 2 - Example of a new electrode (continued)

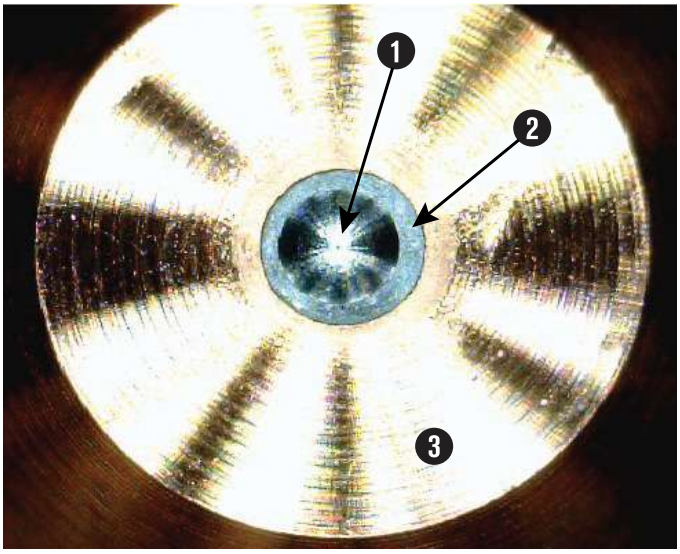

1 Electrode pit

2 Hafnium emitter

3 Electrode face

If an electrode needs replacement because of emitter wear, **always replace the nozzle at the same time as the electrode**. Use the electrode torque tool (429013) to correctly tighten the electrode.

Before you begin:

- Remove the power from the cutting system on page 25
- Remove the torch and consumable parts on page 36

1. Examine the electrode pit diameter for these conditions:

   a. If the diameter extends beyond the hafnium, replace the electrode and nozzle.

   b. If you see a non-symmetrical, rough-edged pit and rough-surfaced electrode face, replace the

electrode and nozzle.

2. Use an electrode pit-depth gauge to measure the pit depth on the electrode.

   A pit-depth gauge is available from Hypertherm.

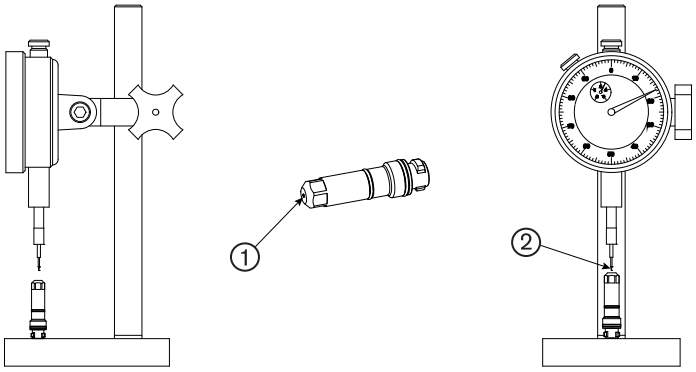

1 Electrode pit

2 Pit-depth gauge

The electrode shown is not to scale.

3. Replace the electrode and nozzle if your pit-depth measurement is outside of these guidelines:

Electrode amperage	Replacement pit depth [1]	Description
< 130 A	≥ 1 mm (0.04 in)	In general, for electrodes less than 130 A, replace the electrode when the pit depth is 1 mm (0.04 in) or more.
≥ 130 A and < 220 A	≥ 1.25 mm (0.05 in)	In general, for electrodes more than or equal to 130 A and less than 220 A, replace the electrode when the pit depth is 1.25 mm (0.05 in) or more.
≥ 220 A	≥ 1.5 mm (0.06 in)	In general, for electrodes more than or equal to 220 A, replace the electrode when the pit depth is 1.5 mm (0.06 in) or more.

1 Based on your cut-quality requirements, it can be necessary to replace your electrode at a pit depth that is shallower or deeper than these guidelines.

Examine the torch receptacle

Damage on the torch receptacle, especially on the O-ring and the receptacle body, can decrease system performance.

Before you begin:

- Remove the power from the cutting system on page 25.
- Remove the torch and consumable parts on page 36.

1. Examine the torch receptacle.

If you find cracks in the torch receptacle	Replace the torch receptacle. Refer to *Install the torch-lead assembly to the torch receptacle* in the instruction manual that came with your cutting system.
If you do not find cracks in the torch receptacle	Continue to the next step.

2. Examine the O-ring on the torch receptacle for cuts, nicks, or signs of damage.

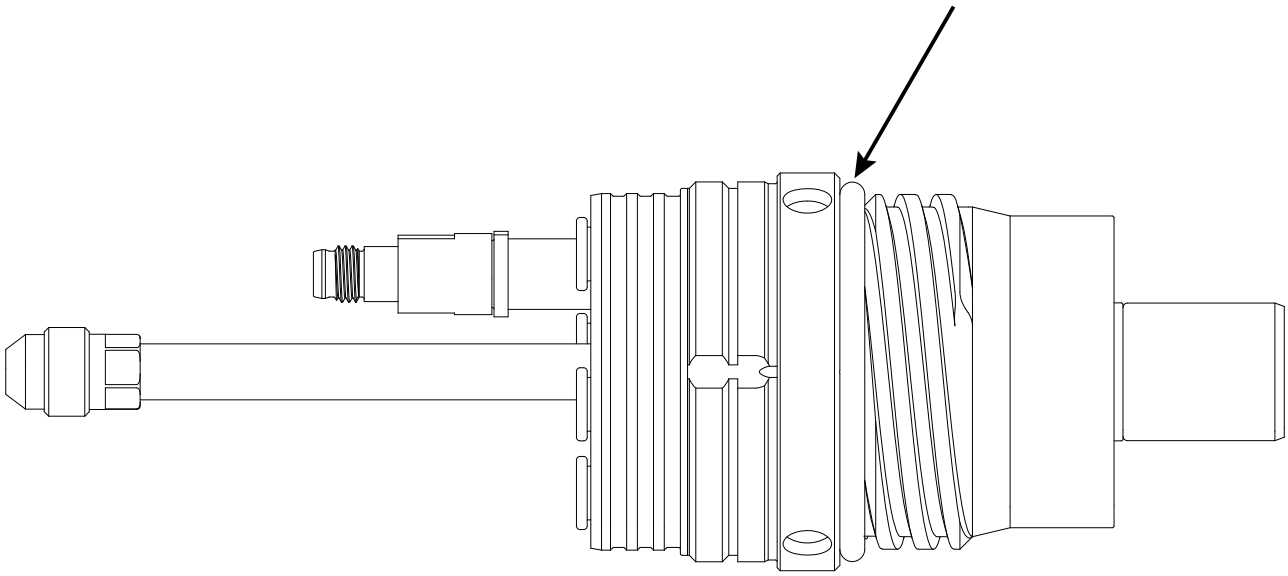

It is not necessary to apply lubricant to the O-ring on the torch receptacle. The O-ring on the torch receptacle is for dust protection only.

3. Replace the O-ring if it has damage or excess wear.

   Torch rebuild kits are available from Hypertherm.

4. Use a clean paper towel or lint-free cloth to clean the internal and external surfaces of the torch receptacle.

5. Use a cotton swab to clean internal surfaces that are not easy to touch.

6. Make sure that you do not let fibers stay on the internal surfaces of the torch receptacle.

7. Use compressed air to remove remaining particles from the torch receptacle.

What to do next: Install the torch in the torch receptacle on page 49.

Install the torch in the torch receptacle

Make sure that the torch is correctly installed in the torch receptacle.

Figure 3 - Torch receptacle connections

Figure 3 - Torch receptacle connections (continued)

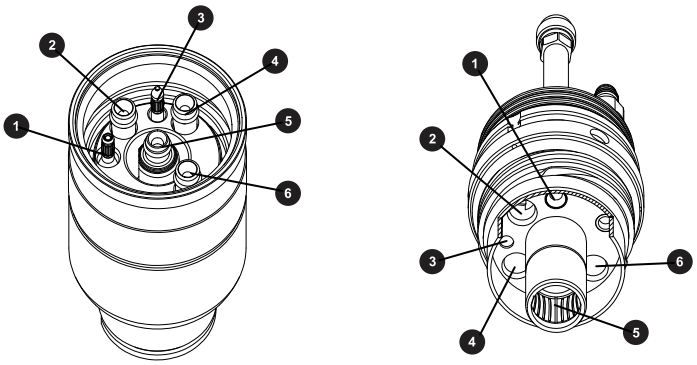

1 Pilot arc

2 Coolant return

3 Ohmic

4 Shield gas

5 Coolant supply

6 Plasma gas

1. Apply a thin layer of silicone lubricant to the four O-rings that are in the torch body.

   Do **not** apply silicone to the brass electrical connectors.

   Make sure that the O-rings are shiny. However, too much lubricant can prevent gas flow. Remove unwanted lubricant if found.

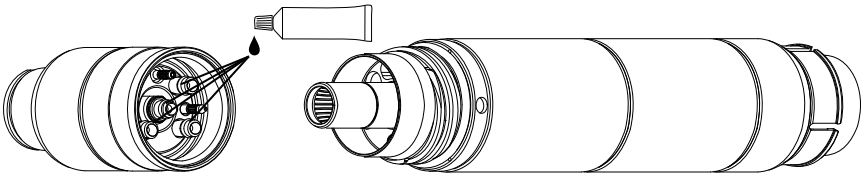

2. Install the torch in the torch receptacle:

   a. Turn the torch body up with light force until you feel the torch body engage into position in the torch receptacle.

   b. Use your hands to tighten the torch-coupler nut until the coupler nut cannot turn.

      Do **not** use tools to tighten the torch-coupler nut.

3. Make sure that the torch body is fully installed in the torch receptacle and that there is no space between the torch body and torch receptacle.

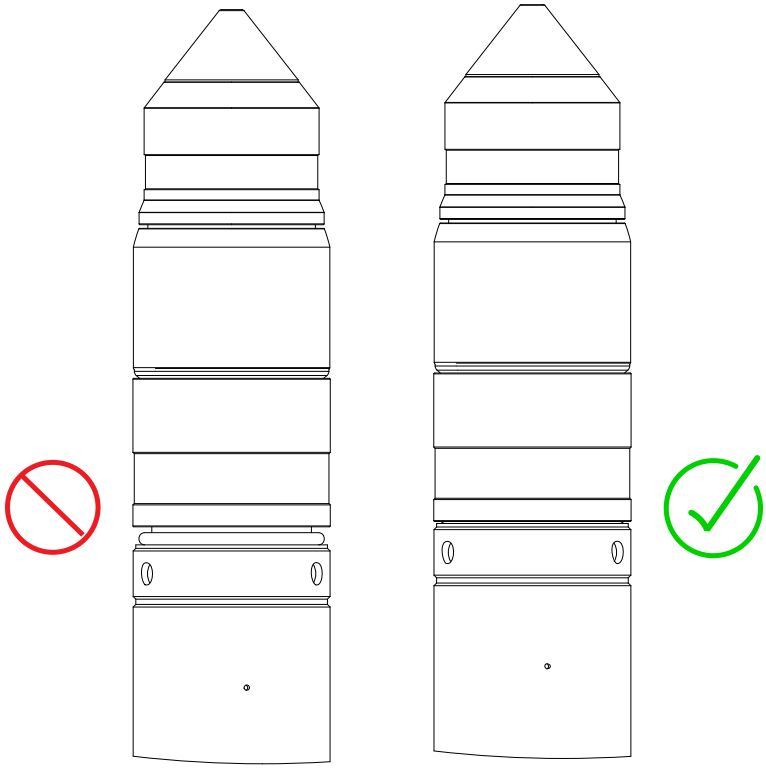

Examine the torch lead

Examine the torch lead for signs of damage or loose connections. Make sure that the torch lead obeys bend-radius requirements in the instruction manual that came with your cutting system.

Before you begin:

- Remove the power from the cutting system on page 25.
- Remove the torch and consumable parts on page 36.

1. Examine the torch lead for kinks, cracks, cuts, or damage.
2. Replace the torch lead if you find these conditions.
3. Remove the collar on the torch-end of the torch lead:
    a. Loosen the hose clamp that holds the collar in position.
    b. Pull the collar away from the torch-end of the torch lead assembly.

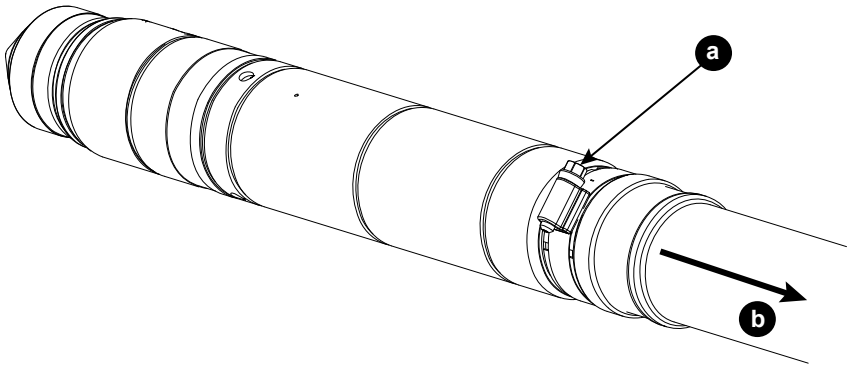

4. Remove the torch mounting sleeve:
   a. Use a spanner wrench to hold the torch stable.
   b. Loosen the torch mounting sleeve.
   c. Pull the torch mounting sleeve away from the torch.

   A spanner wrench is included in all of the consumable-parts kits. Refer to the *Parts List*. The spanner wrench helps to reduce torch movement when you loosen or tighten the torch-mounting sleeve.

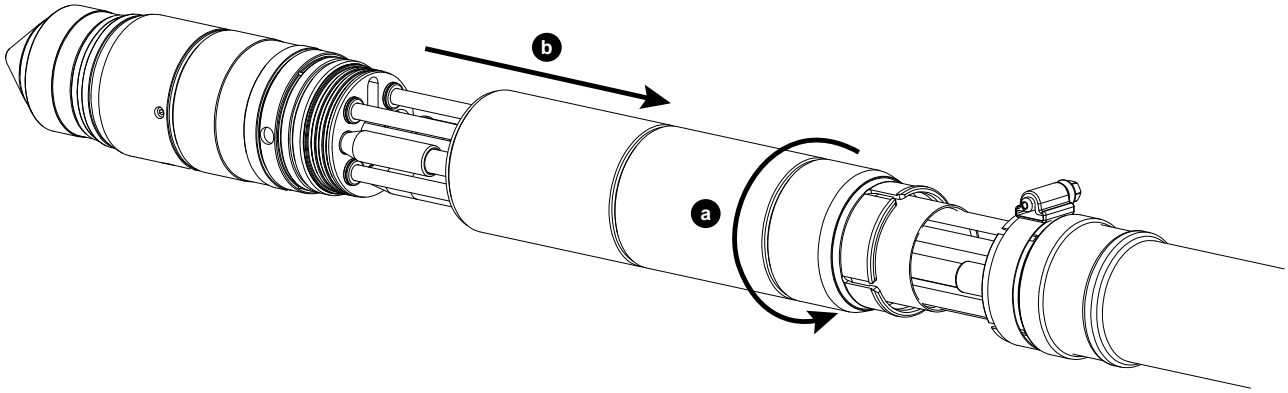

5. Make sure that all connections between the torch and torch lead are tight:
   a. If the pilot arc or ohmic cable connectors are not tight, use your fingers to tighten the connections, but do not make them too tight.
   b. If the coolant-return hose connector is not tight, use two wrenches to tighten the nut to 16.3 N·m –19.0 N·m (144 lbf·in – 168 lbf·in).
   c. Examine the push-to-connect fittings for the Plasma Line A, Plasma Line B, coolant-supply, and shield-gas hoses to make sure that each hose is fully inserted and insertion mark is not in view.

      Use your fingers to push the connector until it stops, approximately 13 mm (0.5 inch) if these connections are not tight.

6. Install the torch mounting sleeve:
   a. Use a spanner wrench to hold the torch stable.
   b. Move the torch mounting sleeve in the direction of the torch.
   c. Use your hands to tighten the torch mounting sleeve connection.

   Do **not** overtighten the torch mounting sleeve.

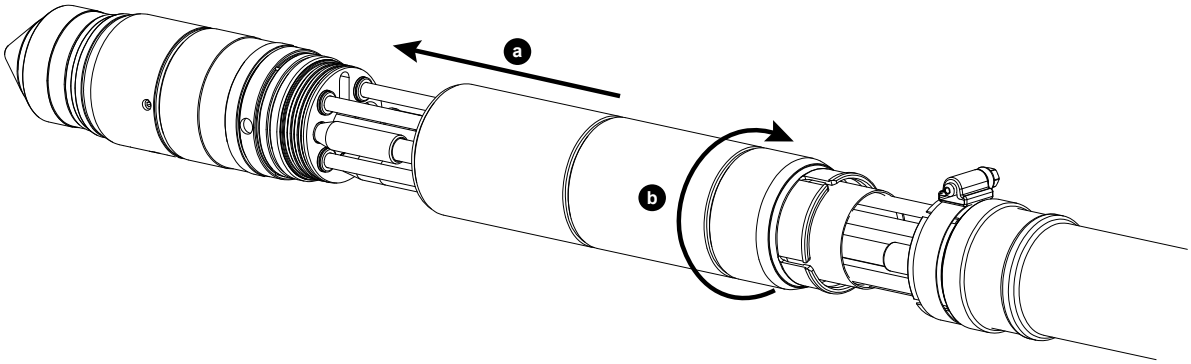

7. Put the collar in the correct position on the torch-end of the torch lead:
   a. Move the collar in the direction of the torch-end of the torch-lead assembly.
   b. Tighten the hose clamp that holds the collar in position.

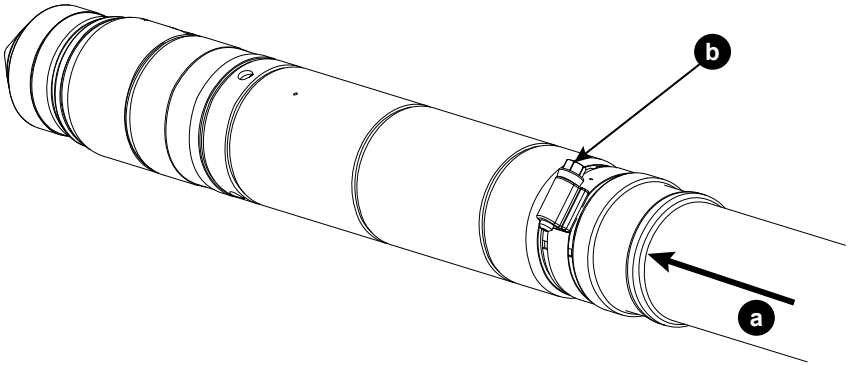

8. If you have a power track that supports the torch lead, look for torch-lead damage or loose connections that are signs that the torch lead movement is more than the 152.5 mm (6 inch) bend-radius requirement.
9. Adjust or replace the torch lead if necessary.

Tasks for one-week intervals

Do a gas leak test

Do an automated gas leak test on the CNC screen or XPR web interface if you suspect a cutting system gas leak.

WARNING

HYDROGEN GAS CAN CAUSE AN EXPLOSION OR FIRE

Hydrogen is a flammable gas that can cause an explosion or fire if it is not removed.

Keep flames away from cylinders and hoses that contain hydrogen. Keep flames and sparks away from the torch when using hydrogen as a plasma gas.

Consult your local safety, fire, and building code requirements for the storage and use of hydrogen.

Hypertherm recommends that you install an exhaust ventilation system to remove the hydrogen-enriched atmosphere that can collect when hydrogen is used as the plasma gas for cutting.

Flashback arrestors are REQUIRED to stop the spread of fire to the supply gases (unless a flashback arrestor is not available for a specific gas or pressure).

As an installer or user, you must supply the exhaust ventilation and flashback arrestors for your cutting system. You can get them from your cutting machine supplier.

WARNING

OXYGEN GAS CAN CAUSE A FIRE HAZARD

If you use oxygen as the plasma gas for cutting, it can cause a potential fire hazard due to the oxygen-enriched atmosphere that collects. A fire can occur if oxygen is not removed.

Hypertherm recommends that you install an exhaust ventilation system to remove the oxygen-enriched atmosphere that can collect when oxygen is used as the plasma gas for cutting.

Flashback arrestors are REQUIRED to stop the spread of fire to the supply gases (unless a flashback arrestor is not available for a specific gas or pressure).

As an installer or user, you must supply the exhaust ventilation and flashback arrestors for your cutting system. You can get them from your cutting machine supplier.

- For the XPR170 and XPR300, with version U (or later) of the XPR firmware, you can do a gas leak test with all gas connect consoles, including Core and CorePlus. With a firmware version before revision U, you can do gas leak tests only with VWI and OptiMix consoles.
- For the XPR460, you can do a gas leak test with all gas connect consoles, including Core and CorePlus.

1. Use the CNC screen or XPR web interface to select the command to do an automated gas leak test.

   The error log shows the test results.

   The instruction manual that came with your CNC has information to help you do this step.

2. Refer to the error log for information about how to find or troubleshoot a possible gas leak.

Example

Gas leak tests in the XPR web interface

When you select **GAS LEAK TEST** in the XPR web interface:

1 The **GAS LEAK TEST** button is highlighted with red to show that it is active, and the test has started.

2 The active valves are identified with colored highlights.

3 The gases shown on Line A, Line B, and shield are different for different process IDs. You can do a gas leak test for Line A (black) and for Line B (yellow) but not for the shield gas line (blue).

4 The gases flow until you select the same button or select a different button that interrupts the test.

Figure 4 - GAS LEAK TEST in the XPR web interface

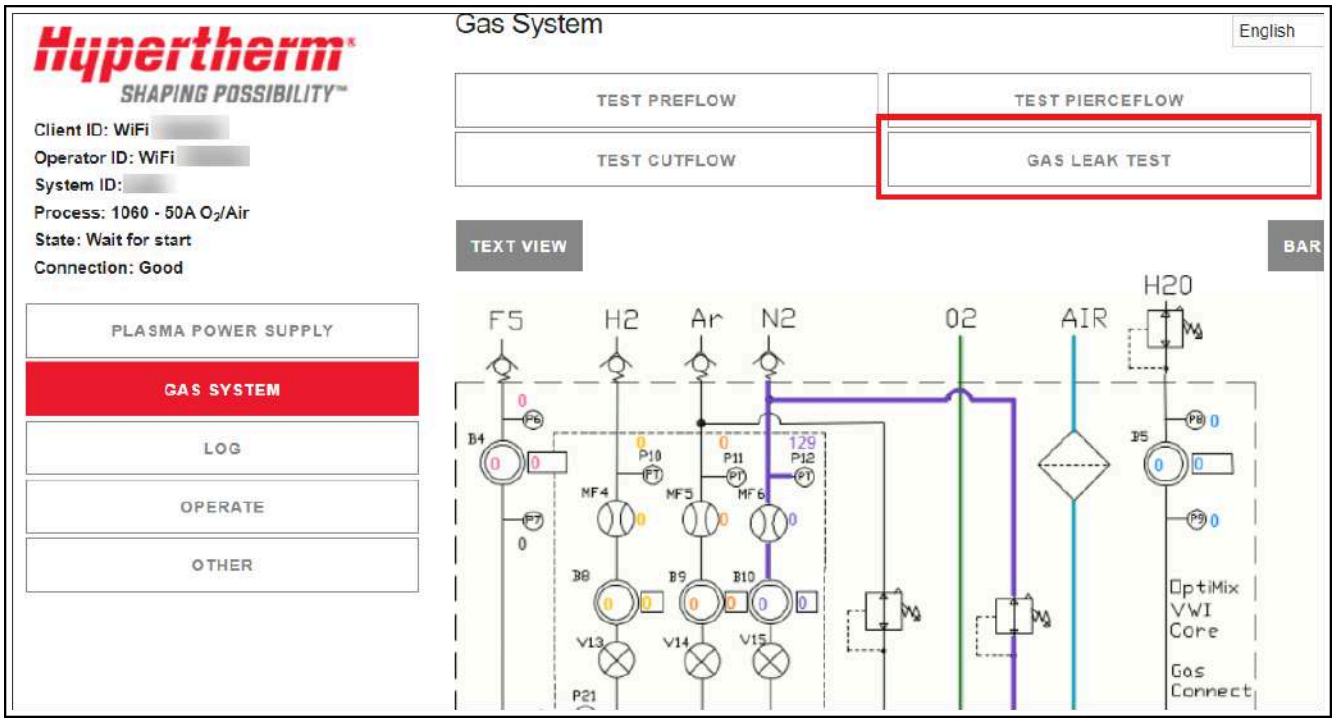

What to do next:

- After you complete a gas leak test in the XPR web interface, select the **LOG** button to see the result of the test.
- The **Log** screen shows if the test was successful.
- For a test that was not successful, look for information on the **Log** screen that identifies the point of failure.
- Use the information from the **Log** screen and the wiring diagrams for your system to find the location of the gas leak.

Coolant flow measurements

There are two methods to measure coolant flow. You can use the CNC or XPR web interface, or you can do a container test.

It is necessary for electric power to be supplied to the cutting system to measure coolant flow. **Use extreme caution if you do diagnosis or maintenance tasks when the system components are connected to electric power.**

WARNING

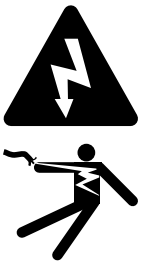

ELECTRIC SHOCK CAN KILL

The plasma power supply contains dangerous electric voltages that can seriously injure or kill you. Even if the plasma power supply is turned OFF, you can still get a serious electric shock if the plasma power supply remains connected to an electric power source.

Use extreme caution if you do diagnosis or maintenance tasks when the plasma power supply remains connected to an electric power source and the outer cover or panels are removed. All work that requires removal of the plasma power supply outer cover or panels must be done by a qualified technician. Refer to the *Safety and Compliance Manual (80669C)* for more safety information.

Use the CNC or XPR web interface to measure coolant flow

If the coolant flow rate is outside of the correct range, an internal obstruction or leak can be the cause.

1. Look at the CNC or XPR web interface to identify the coolant flow rate.
2. Make sure that the coolant flow rate is more than the minimum flow rate limit for your cutting system.

Minimum flow rate limits		Frequency (Hz)
Liters per minute (L/min)	**U.S. gallons per minute (gal/min)**	
1.89 L/min	0.5 gal/min	15 Hz
3.78 L/min	1.0 gal/min	XPR170, XPR300: 34 Hz, XPR460: 33 Hz
5.67 L/min	1.5 gal/min	XPR170, XPR300: 54 Hz, XPR460: 51 Hz

Do a container test to measure coolant flow

The container test helps to find problems with coolant flow.

1. Get an empty container that has a minimum capacity of 3.79 liters (1 U.S. gallon) and includes volume measurements, if possible.
2. Remove the power from the cutting system on page 25.
3. Remove the correct coolant-return hose (red band) from the correct coolant-return fitting.
   - For the XPR170 and XPR300, the correct coolant-return hose (red band) is connected to the coolant-return fitting (red) on the **rear** of the **plasma power supply**.

Figure 5 - XPR170 and XPR300 coolant-return hose

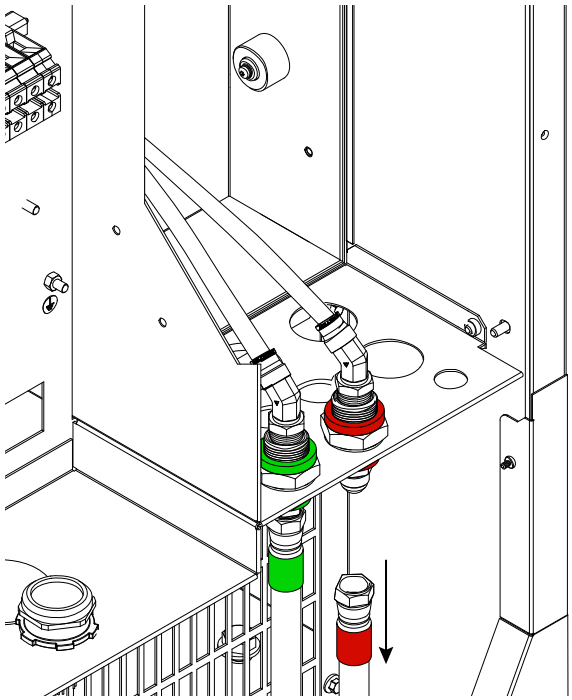

   - For the XPR460, the correct coolant-return hose (red band) is connected to the coolant-return fitting (large red) on the **rear** of the **cooler**.

Figure 6 - XPR460 coolant-return hose

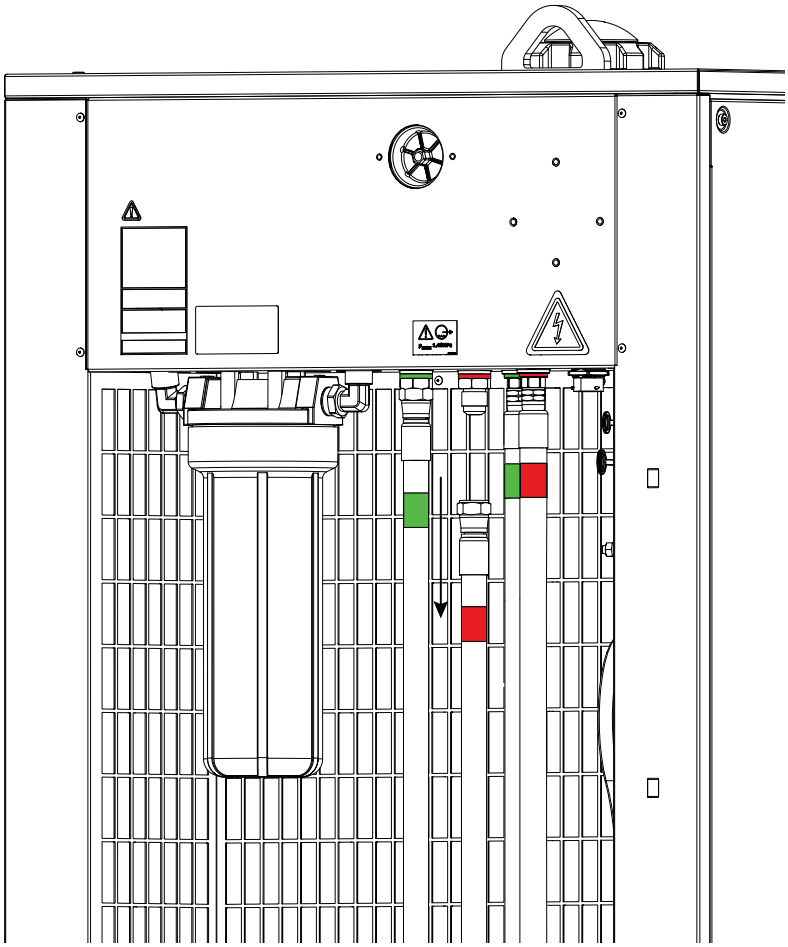

4. Use the container to collect coolant leaks if necessary.
5. Remove the coolant from the container before you start the test.
6. Put the end of the coolant-return hose in the container.
7. Supply power to the cutting system.
8. Send a process to the cutting system.
9. When you hear the coolant pump start, let the coolant flow in the container for 30 seconds.
10. After 30 seconds, look at the quantity of coolant in the container.

    Make sure that the container has a minimum of 1.89 liters (0.5 U.S. gallon) of coolant.
11. If the flow rate is outside of the correct range, an internal obstruction or leak can be the cause.

Problems with the torch or consumable parts can be a source of flow restrictions. Make sure the consumable parts are in good condition and that you are using the correct consumable parts for the process.

12. If you find obstructions, remove them.

13. If you find parts that have damage, replace them.

14. If coolant flow stays slow, and it has been more than six months since the last coolant replacement, replace the coolant.

    Refer to Coolant replacement and its significance on page 71.

    Hypertherm recommends coolant replacement every six months. Replace the coolant if you find copper pieces or if the coolant is clear and not the original pink color.

15. If coolant flow stays slow after replacement, make sure that the bypass-operation is correct and that these components are in good condition:

    - ☐ Consumable parts and torch
    - ☐ Console-to-console leads
    - ☐ Coolant check valve
    - ☐ Coolant bypass valve
    - ☐ Valve seals
    - ☐ Coolant solenoid
    - ☐ Coolant-pump motor

16. If you cannot find or correct the problem, speak to your cutting machine supplier or regional Hypertherm Technical Service team.

Tasks for one-month intervals

Clean the internal surfaces of the system components

Remove dust and particles from the internal surfaces of the plasma power supply, cooler (if applicable), gas connect console, and TorchConnect™ console.

1. Remove the power from the cutting system:

    a. Set the line-disconnect switch to the OFF position.

b. Make sure that the power-indicator LED is **not** illuminated on these system components:

- Plasma power supply
- Cooler, if applicable
- Gas connect console
- TorchConnect console

2. Remove both side panels from the plasma power supply.
3. Remove both side panels from the cooler, if applicable.
4. Remove the top panel from the gas connect console.
5. Remove the top panel from the TorchConnect console.
6. Use low-pressure air or a vacuum to remove dust and particles from these locations:

   - ☐ Side panels
   - ☐ Fans
   - ☐ Heat exchanger
   - ☐ Any internal surface that has dust or particles

7. Carefully remove dust and particles from each PCB.
8. **Before** you supply power to the cutting system, install all external panels.

Examine the contactors

1. Examine the contactors for black or rough surfaces:

   - ☐ For XPR170, examine the main contactor.

Figure 7 - Location of main contactor for XPR170

Figure 7 - Location of main contactor for XPR170 (continued)

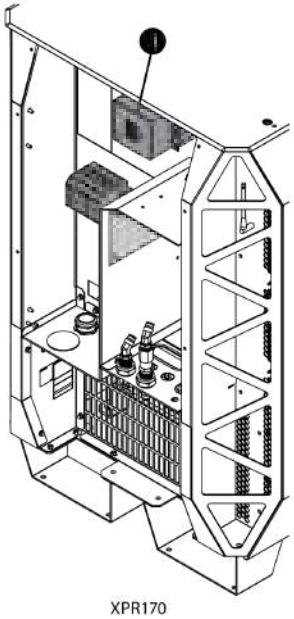

1 Main contactor

- ☐ For XPR300, examine the main contactor and inrush contactor.

Figure 8 - Location of the main contactor and inrush contactor for XPR300

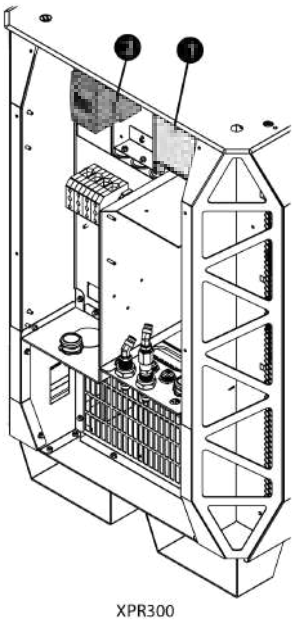

Figure 8 - Location of the main contactor and inrush contactor for XPR300 (continued)

1 Main contactor

2 Inrush contactor

- ☐ For XPR460, examine the main contactor and inrush contactor.

Figure 9 - Location of the main contactor and inrush contactor for XPR460

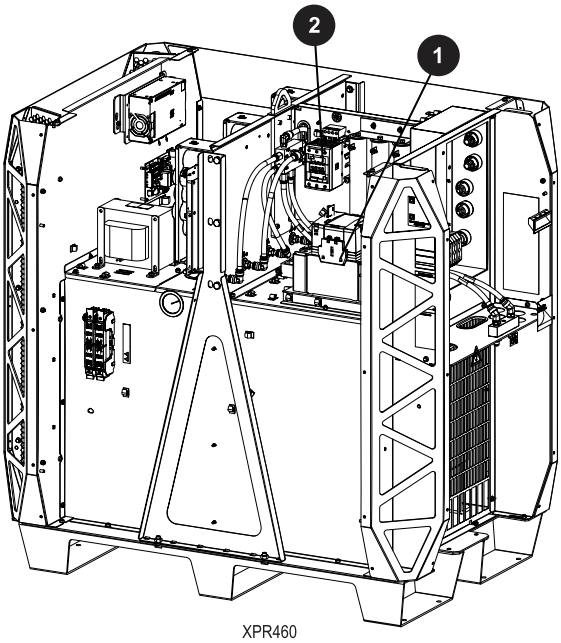

1 Main contactor

2 Inrush contactor

2. If you find a contactor that has unwanted black or rough surfaces, replace the contactor.

Examine the relays

1. Examine the relays for black or rough surfaces:

- ☐ For XPR170 and XPR300, remove the cover from the pilot-arc relay in the **plasma power supply**.

Figure 10 - Location of the pilot-arc relay for XPR170 and XPR300

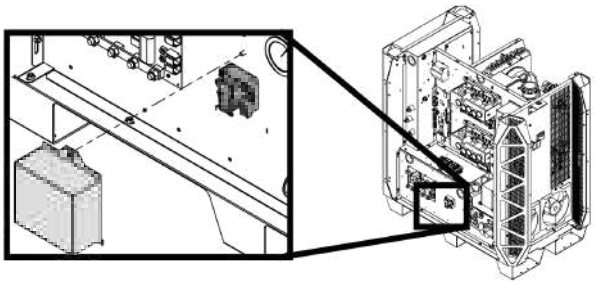

- ☐ For XPR460, remove the covers from the pilot-arc relay and the cooler-power relay in the **plasma power supply**.

Figure 11 - Location of the pilot-arc relay and cooler-power relay for XPR460

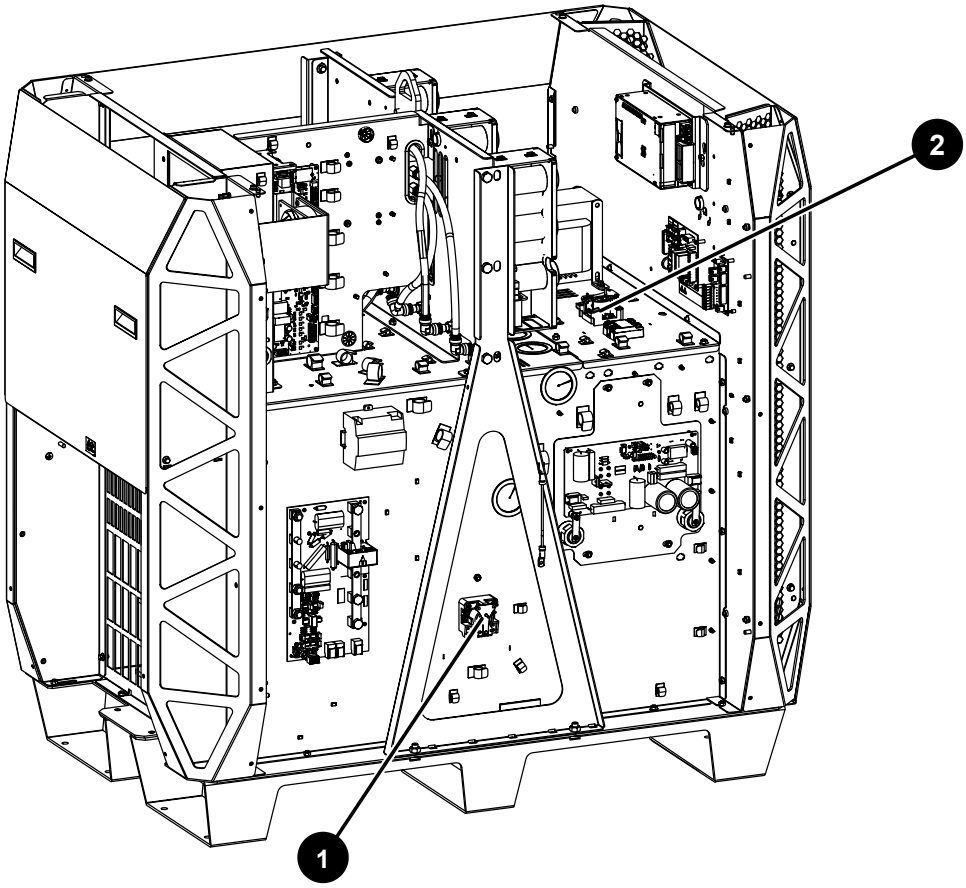

Figure 11 - Location of the pilot-arc relay and cooler-power relay for XPR460 (continued)

1 Pilot-arc relay

2 Cooler-power relay

2. Examine the contacts in the relay.
3. If you find unwanted black or rough surfaces, replace the relay.
4. Carefully install the cover of the relay.

Do not pinch the wires between the cover and the panel.

Examine the gas line connections for leaks

Before you begin:

CAUTION

AMMONIA CAUSES BRASS TO CRACK AND BECOME BRITTLE.

Do not clean brass connections with ammonia-based cleaners.

- Spray all of the gas line connections with soapy water. If bubbles show on a gas line, tighten or replace it as necessary. Refer to the *Parts List* section of your system's instruction manual.

Examine the ground connections

- Make sure that all components of the system are individually grounded to a driven earth ground.

  Refer to the Grounding practices on page 66 and Example grounding diagram with a plasma cutting system on page 69.

  For more information, refer to *Recommended grounding and shielding* in the instruction manual that came with your cutting system.

Grounding practices

When you set up an XPR cutting system, make sure that you comply with all best practices for correctly grounding the system.

- Unless noted, for XPR cutting systems, use cables with a minimum gauge of 21.2 mm^2 (4 AWG) (047031) for the Electromagnetic Interference (EMI) ground cables shown in the Example grounding diagram with a plasma cutting system on page 69.
- The cutting table is used for the common, or star, EMI ground point and should have threaded studs welded to the table with a copper bus bar mounted on them. A separate bus bar should be mounted on the gantry as close to each motor as possible. If there are motors at each end of the gantry, run a separate EMI ground cable from the far motor to the gantry bus bar. The gantry bus bar should have a separate, heavy EMI ground cable 21.2 mm^2 (4 AWG; 047031) to the table bus bar. The EMI ground cables for the torch lifter and the Remote High Frequency (RHF) console or combined ignition/gas connect console must each run separately to the table ground bus.
- Inadequate grounding not only exposes operators to dangerous voltages, but inadequate grounding also increases the risk of equipment failure and unnecessary downtime. Ideally a ground should be zero ohms resistance, but field experience indicates under 1 ohm resistance is satisfactory for most applications. Hypertherm recommends that you consult your national and local electrical codes to make sure that the grounding and shielding practices that you use comply with the requirements for your location.
- A ground rod (a Protective Earth (PE) ground) that meets all applicable national and local electric codes must be installed within 6 m (20 ft) of the cutting table. For XPR cutting systems, the PE ground must be connected to the cutting table ground bus bar using a minimum 21.2 mm^2 (4 AWG) grounding cable (047031). Consult an electrician in your location to make sure that your grounding meets all national and local electric codes.
- For the most effective shielding, use the Hypertherm CNC interface cables for Input/Output (I/O) signals, serial communication signals, between plasma cutting systems in multi-drop connections, and for interconnections between all components of the Hypertherm system.
- All hardware used in the ground system must be brass or copper. While you can use steel studs welded to the cutting table for mounting the ground bus, no other aluminum or steel hardware can be used in the ground system.
- Alternating Current (AC) power, PE, and service grounds must be connected to all equipment according to national and local codes.

- For a cutting system with a RHF console or combined ignition/gas connect console, the positive, negative, and pilot arc cables should be bundled together for as long a distance as possible. The torch lead, work cable, and the pilot arc (nozzle) cables may be run parallel to other wires or cables only if they are separated by at least 150 mm (6 inches). If possible, run power and signal cables in separate cable tracks.
- For a cutting system with a RHF console or combined ignition/gas connect console, Hypertherm recommends that you mount this console as close as possible to the torch. This console also must have a separate ground cable that connects directly to the cutting table ground bus bar.
- Each Hypertherm component, and any other CNC or motor drive cabinet or enclosure, must have a separate ground cable to the common (star) ground on the table. This includes the ignition/gas connect console, whether it is bolted to the plasma cutting system or to the cutting table.
- For XPR cutting systems, the coupler on the pilot arc and coolant hose assembly must be connected firmly to the gas connect console and TorchConnect console collars. Make sure to tighten the clamp. The collar on the torch lead must be connected firmly to the torch sleeve. Make sure to tighten the clamp. Connect a ground cable (10 AWG) to the flat terminal on the torch mounting sleeve.
- The torch holder and the torch breakaway mechanism – the part mounted to the lifter, not the part mounted to the torch – must be connected to the stationary part of the lifter with copper braid at least 12.7 mm (0.5 inches) wide. A separate cable must run from the lifter to the gantry ground bus bar. The valve assembly should also have a separate ground connection to the gantry ground bus bar.
- If the gantry runs on rails that are not welded to the table, then each rail must be connected with a ground cable from the end of the rail to the table. The rail ground cables connect directly to the table and do not need to connect to the table ground bus bar.
- If you are installing a voltage divider PCB, mount it as closely as possible to where the arc voltage is sampled. One recommended location is inside the plasma power supply enclosure. If a Hypertherm voltage divider PCB is used, the output signal is isolated from all other circuits. The processed signal should be run in twisted shielded cable (Belden® 1800F or equivalent). Use a cable with a braided shield, not a foil shield. Connect the shield to the chassis of the plasma cutting system and leave it unconnected at the other end.
- All other signals (analog, digital, serial, and encoder) should run in twisted pairs inside a shielded cable. Connectors on these cables should have a metal housing. The shield, not the drain, should be connected to the metal housing of the connector at each end of the cable. Never run the shield or the drain through the connector on any of the pins.

Figure 12 - Plasma cutting system components connected to a cutting table ground bus

Figure 12 - Plasma cutting system components connected to a cutting table ground bus (continued)

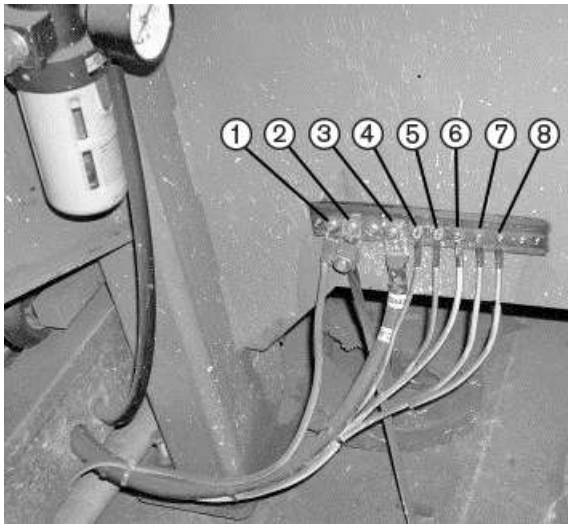

1 Gantry ground bus

2 Ground rod

3 Plasma cutting system work cable (+)

4 Gas connect console

5 CNC enclosure

6 Torch holder

7 Plasma cutting system chassis

8 TorchConnect console

Cooler, if applicable (not shown)

The following picture shows an example of a gantry ground bus. It is bolted to the gantry, close to the motor. All of the individual ground cables from the components mounted on the gantry connect to the bus. A single heavy cable then connects the gantry ground bus to the table ground bus.

Figure 13 - Gantry ground bus example

Figure 13 - Gantry ground bus example (continued)

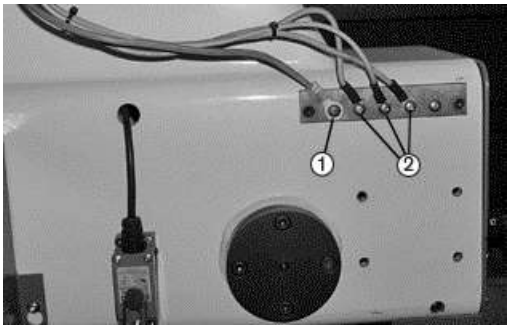

1 Cable to the cutting table ground bus

2 Ground cables from components on the gantry

Example grounding diagram with a plasma cutting system

Figure 14 - Example grounding diagram with a plasma cutting system

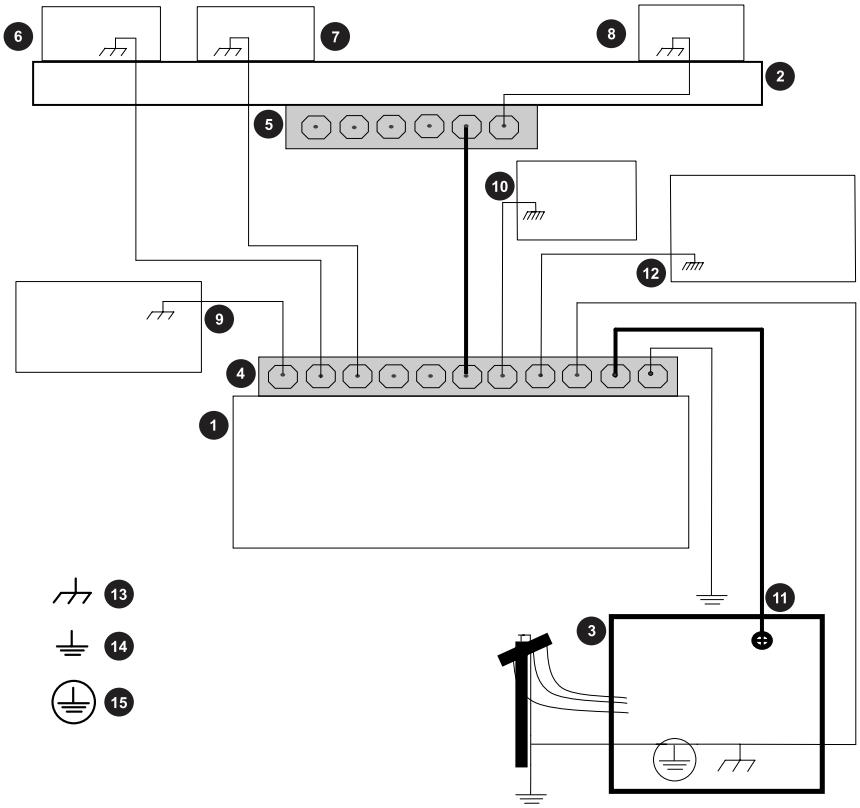

1 Cutting table

Figure 14 - Example grounding diagram with a plasma cutting system (continued)

2 Gantry

3 Plasma system

4 Table ground bus bar

5 Gantry ground bus bar

6 Torch height control lifter

7 TorchConnect console

8 CNC

9 Torch height control module

10 Gas connect console. Connect to table ground bus bar. [1]

11 Direct Current (DC) power ground (work)

12 Cooler, if applicable

13 Chassis and EMI ground

14 Service ground

15 PE ground

1 The ignition console is integrated into the gas connect console for XPR cutting systems.

This example is based on practices in North America. Other regions can have different national or local electrical codes. Hypertherm recommends that you consult your national and local electrical codes to make sure that the grounding and shielding practices that you use comply with the requirements for your location.

Examine the table-to-workpiece connection

- Examine the work lead (+) connection where the work lead (+) connects to the cutting table.
- Make sure that there is no paint, oil, dirt, or rust on the workpiece.

  Paint, oil, dirt, or rust, on the workpiece prevents a clean metal-to-metal contact between the work lead and the cutting table or workpiece. It can also cause arc-transfer problems.

Tasks for six-month intervals – coolant maintenance

Coolant replacement and its significance

Hypertherm recommends that you replace all of the coolant at least once every six months, as part of routine preventive maintenance. More frequent replacement can be necessary because of environmental conditions, contaminants in your coolant, or diagnostic codes for coolant problems.

Adding new coolant to the reservoir when the coolant level is low is **not** the same as replacing all of the coolant. **All** of the coolant must be removed to flush the coolant system.

Before refilling the cutting system with new coolant, refer to Remove old coolant from the plasma cutting system on page 72.

The use of old coolant can decrease coolant flow, which can cause higher torch temperatures that shorten the life of consumable parts.

Make an estimate of the total coolant volume

Use these calculations to make an estimate for the total coolant volume for your plasma cutting system.

The coolant reservoir can contain a maximum of 15.1 liters (4 U.S. gallons). But when the cutting system is fully installed, the entire system can contain between 22.7 liters – 45 liters (6 U.S. gallons – 12 U.S. gallons).

More coolant is necessary for a cutting system with long leads than a cutting system with short leads.

- Make an estimate of total coolant volume in liters.

26	+	0.2534	X	Length of leads (**in meters**) between the plasma power supply and gas connect console for your cutting system	=	Total estimated volume (in liters)

- Make an estimate of total volume in U.S. gallons.

6.8	+	0.0204	X	Length of leads (**in feet**) between the plasma power supply and gas connect console for your cutting system	=	Total estimated volume (in U.S. gallons)

Remove old coolant from the plasma cutting system

Empty the reservoir, heat exchanger, hoses, and filter housing. Use compressed air to remove remaining coolant. Replace the coolant filter and pump screen if necessary. Clean all parts and look for debris before you connect the hoses.

Before you begin:

- Remove the power from the cutting system on page 25.
- Get a new coolant-pump filter and find the provided drainage tube.
- Get an empty container that holds the approximate total coolant volume for your cutting system. Refer to Make an estimate of the total coolant volume on page 71.

1. Remove the correct external panel to get access to the coolant system.
   - For the XPR170 and XPR300, the correct external panel is on the **right** when you look at the front of the **plasma power supply**.
   - For the XPR460, the correct external panel is on the **left** when you look at the rear of the **cooler**.
2. Remove the old coolant from the coolant reservoir:
   a. Connect the provided drainage tube (10083915) to the drainage fitting on the bottom of the coolant reservoir
   b. Keep the cap on the coolant reservoir inlet to slow coolant flowing for temporarily.
   c. Put the other end of the drainage tube in an empty container that holds the approximate total coolant volume for your cutting system.
   d. Move the valve for the drainage fitting to the open position.
   e. Remove the cap from the coolant reservoir inlet to let coolant start flowing.
3. Remove the old coolant from the heat exchanger:
   a. Keep one end of the drainage tube connected to the drainage fitting and the other end of the drainage tube in the container.
   b. Remove the correct coolant-return hose (red band) from the correct coolant-return fitting.

- For the XPR170 and XPR300, the correct coolant-return hose (red band) is connected to the coolant-return fitting (red) on the **rear** of the **plasma power supply**.

Figure 15 - XPR170 and XPR300 coolant-return hose

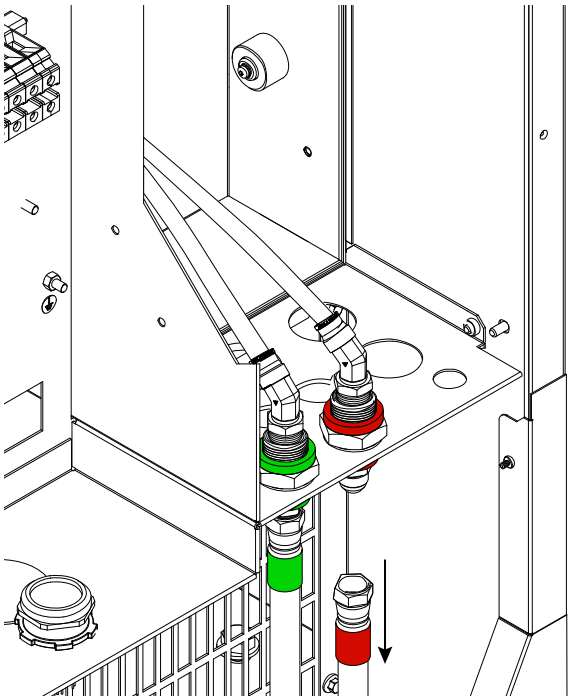

- For the XPR460, the correct coolant-return hose (red band) is connected to the coolant-return fitting (large red) on the **rear** of the **cooler**.

Figure 16 - XPR460 coolant-return hose

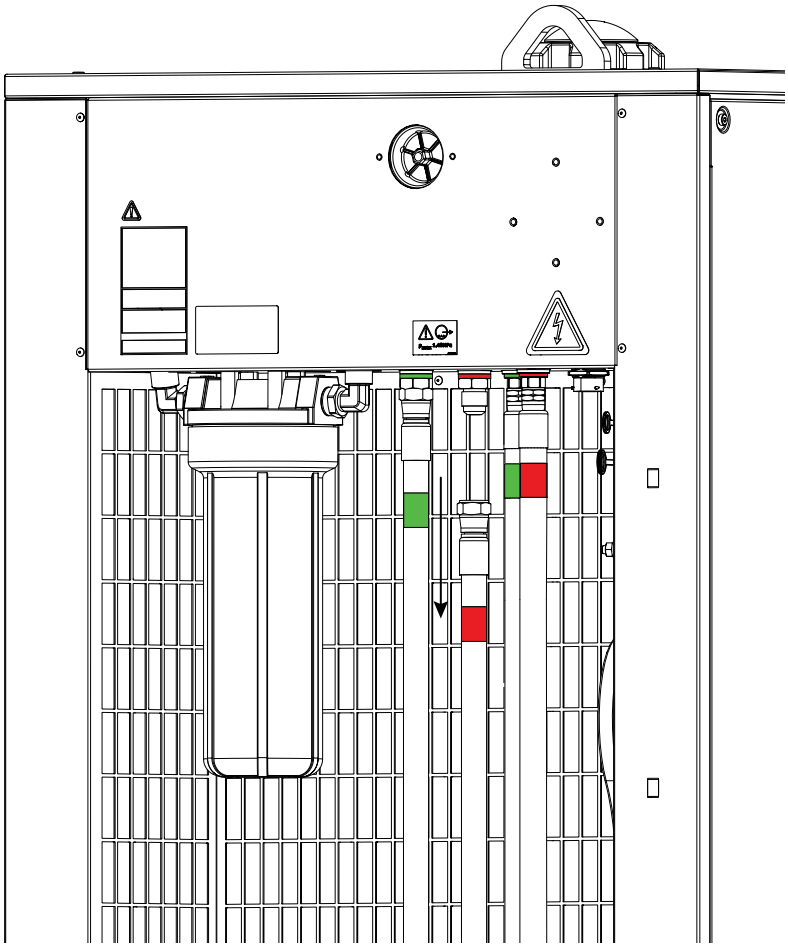

c. Connect compressed air (no more than 6.89 bar/100 psi) to the coolant-return fitting (red, large red).

d. For **no more** than 30 seconds, use compressed air to blow the coolant in the direction of the coolant reservoir and filter housing.

System components require coolant to lubricate rotating surfaces. If air flows for more than 30 seconds, it can remove too much coolant and have a bad effect on lubrication.

e. Keep the coolant-return hose (red band) disconnected temporarily.

4. Remove the old coolant from the coolant pump:

a. Put an empty container under the coolant-pump plug.

b. Remove the plug and screen from the coolant pump.

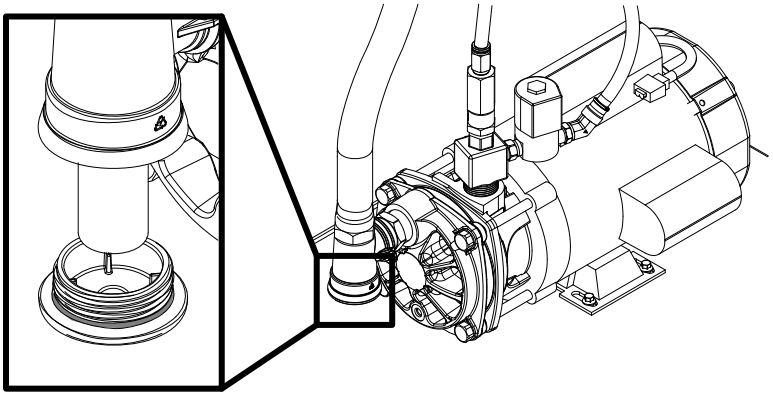

5. Clean and examine the coolant-pump screen and the O-ring on the coolant-pump plug:
   a. Remove debris from the screen and use clean water to remove small particles if necessary.
   b. Examine the screen for damage.
   c. Replace the screen (127559) if you find damage.

      Install again the original screen if no damage is found.
   d. Use a clean cloth to wipe the O-ring on the coolant-pump plug and examine the O-ring for damage.
   e. Replace the plug (428973) if you find O-ring damage.

      Install the original plug with provided O-ring if no O-ring damage is found.
   f. Install the coolant-pump plug on the coolant-pump housing.
6. Remove the old coolant from the coolant-filter housing and replace the coolant filter:
   a. Remove the filter housing.

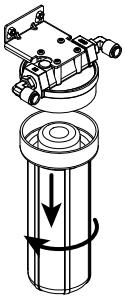

   b. Discard all coolant from the filter housing and remove and discard the coolant filter.

      Recycle if possible. Discard if not.
   c. Examine the internal surfaces of the coolant-filter housing for debris.
   d. Remove debris from the internal surfaces and use clean water to remove small particles if

necessary.

e. Install a new coolant-pump filter (027005) in the pump housing.

f. Install the filter housing.

7. Remove the old coolant from the coolant-supply and the coolant-return hoses:

The hoses can hold a large volume of coolant.

If you do not remove all of the old coolant from the hoses, the old and new coolant will mix. Mixing the old and new coolant causes contamination that will have a bad effect on coolant condition.

a. Put the disconnected end of the coolant-return hose (red band) in an empty container that holds the approximate total coolant volume for your cutting system.

b. Remove the correct coolant-supply hose (green band) from the correct coolant-supply fitting.

- For the XPR170 and XPR300, the correct coolant-supply hose (green band) is connected to the coolant-supply fitting (green) on the **rear** of the **plasma power supply**.
- For the XPR460, the correct coolant-supply hose (green band) is connected to the coolant-supply fitting (large green) on the **rear** of the **cooler**.

c. Connect compressed air (no more than 6.89 bar/100 psi) to the disconnected end of the coolant-supply hose (green band).

d. For approximately three minutes, blow compressed air in the coolant-supply hose (green band).

e. Continue to blow compressed air in the coolant-supply hose (green band) until coolant stops flowing out of the coolant-return hose (red band).

f. After coolant stops flowing out of the coolant-return hose (red band), do one of the following:

For the XPR170 and XPR300	Continue to the next step.
For the XPR460	Remove the other coolant-supply hose (green band) and coolant-return hose (red band). Put the disconnected end of the coolant-return hose (red band) in the empty container. Do step c on page 76, step d on page 76, step e on page 76 again until coolant stops flowing out of the coolant-return hose (red band).

g. Connect the correct coolant-return hose (red band) and coolant-supply hose (green band) to the correct fittings.

- For the XPR170 and XPR300, the coolant-return hose (red band) is connected to the coolant-return fitting (red) and the coolant-supply hose (green band) is connected to the coolant-supply fitting (green) on the **rear** of the **plasma power supply**.

- For the XPR460, connect both of the coolant-return hoses (red band) to the coolant-return fittings (red, large red) and both of the coolant-supply hoses (green band) to the coolant-supply fittings (green, large green) on the **rear** of the **cooler**.

Figure 17 - Coolant connectors on the rear of the cooler

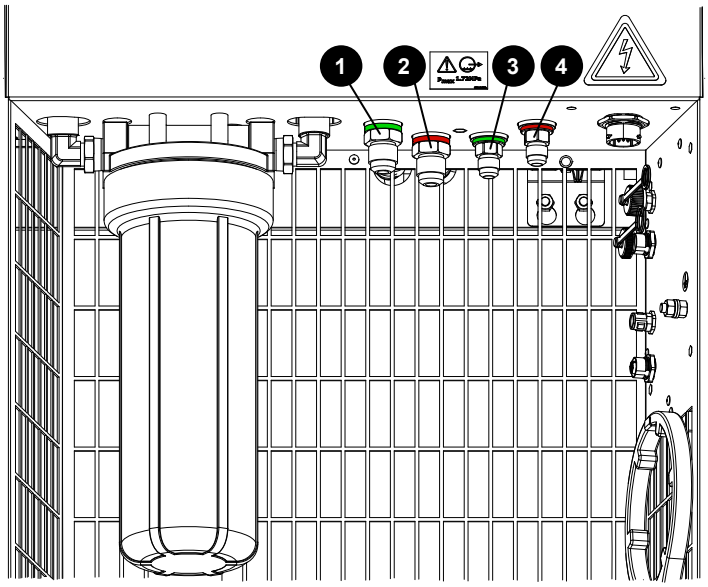

1 Coolant supply to the gas connect console (large green)

2 Coolant return from the gas connect console (large red)

3 Coolant supply to the plasma power supply (green)

4 Coolant return from the plasma power supply (red)

What to do next: Install new coolant.

Refer to *Fill the cutting system with coolant* in the instruction manual that came with your cutting system.

3 Component-replacement schedule

Component-replacement schedule and its significance

This is a list of components and their usual replacement schedule. The schedule uses arc hours to make an estimate of when to replace a component. The use of arc hours is the most accurate method to make an estimate of when to replace a component.

If you do not have a Hypertherm CNC and your CNC cannot monitor arc hours, use the information below to make an estimate of arc hours per year. This guide uses the usual number of eight-hour shifts that the system operates during a usual work day. For more information about how to calculate arc hours, speak to your cutting machine supplier or regional Hypertherm Tech Service team.

Number of shifts per day	Number of arc hours per year
1	500
2	1,000
3	1,500

Your cutting area and operations can have an effect on this schedule. Refer to Conditions that have an effect on replacement schedules on page 85.

Keep information about your system and its replacement requirements in the these locations:

- System information on page 91
- Maintenance log for XPR cutting systems on page 93

⚠ WARNING

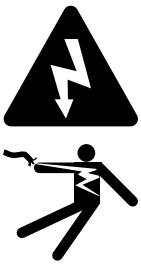

ELECTRIC SHOCK CAN KILL

The plasma power supply contains dangerous electric voltages that can seriously injure or kill you. Even if the plasma power supply is turned OFF, you can still get a serious electric shock if the plasma power supply remains connected to an electric power source.

Use extreme caution if you do diagnosis or maintenance tasks when the plasma power supply remains connected to an electric power source and the outer cover or panels are removed. All work that requires removal of the plasma power supply outer cover or panels must be done by a qualified technician. Refer to the *Safety and Compliance Manual (80669C)* for more safety information.

Table 5 - Usual component list and replacement schedule

Part number	Quantity	Description	Number of arc hours in each year											
			500	1,000	1,500	2,000	2,500	3,000	3,500	4,000	4,500	5,000	5,500	6,000
428639	1	Kit: Torch-rebuild components, air filter (011110), and coolant filter (027005), without coolant	X	X	X	X	X	X	X	X	X	X	X	X
428640	1	Kit: Torch-rebuild components, air filter (011110), and coolant filter (027005), with coolant	X	X	X	X	X	X	X	X	X	X	X	X
028872	6 – 12	Coolant (in U.S. gallons) [1]	X	X	X	X	X	X	X	X	X	X	X	X
	1	Kit: Electronics [2]												
428878 [3]		200 V – 240 V (XPR170)		X		X		X		X		X		X
428879 [4]		380 V – 600 V (XPR170)		X		X		X		X		X		X
428641 [5]		200 V – 240 V (XPR300)		X		X		X		X		X		X
428642 [6]		380 V – 600 V (XPR300)		X		X		X		X		X		X
10083902 [7]		200 V – 240 V (XPR460)		X		X		X		X		X		X
10083903 [8]		380 V – 600 V (XPR460)		X		X		X		X		X		X
420220	1	Quick-disconnect torch receptacle				X				X				X
_ [9]	1	Torch lead				X				X				X

Table 5 - Usual component list and replacement schedule (continued)

Part number	Quantity	Description	Number of arc hours in each year											
			500	1,000	1,500	2,000	2,500	3,000	3,500	4,000	4,500	5,000	5,500	6,000
_ [9]	1	Bevel or robotic torch lead		X		X		X		X		X		X
006113	1	Coolant check valve						X						X
229821 [10]	1 – 2	Fan assembly, 120 mm (4.7 inch) diameter						X						X
229822 [10]	3 – 5	Fan assembly, 254 mm (10 inch) diameter						X						X
229741	1	Kit: Coolant flow meter						X						X
_ [9]	1	Gas lead						X						X
_ [9]	1	Pilot arc lead						X						X
141425	1	Power distribution PCB (PCB7) (XPR170, XPR300)						X						X
141577	1	Power distribution PCB (PCB7) (XPR460)						X						X
141354	1	Ignition PCB (PCB2) for gas connect consoles with a serial number that is less than 5,000											X	
141595	1	Spark gap PCB that goes on the ignition PCB for gas connect consoles with a serial number that is more than 5,000.						X						X

Table 5 - Usual component list and replacement schedule (continued)

Part number	Quantity	Description	Number of arc hours in each year											
			500	1,000	1,500	2,000	2,500	3,000	3,500	4,000	4,500	5,000	5,500	6,000
10081573	1	Plasma power supply I/O PCB (XPR170, XPR300)												X
10085206	1	Plasma power supply I/O PCB (PCB5) (XPR460)												X
229838	1	High-frequency transformer (T1)												X
229640	1	Power source: 24 VDC											X	
229671	1	Power source: 48 VDC											X	
10082976	1	Power source: 48 VDC with bracket (XPR460)											X	
229882	1	Kit: Ohmic contact PCB (PCB2) and ohmic relay											X	
10085251	1– 3	Chopper												X

1 The number of gallons that is necessary changes for different leads. Refer to the instruction manual that came with your cutting system for more information. Keep this number in Coolant requirements on page 91.

2 Refer to the instruction manual that came with your cutting system for the correct voltage. Keep this number in System voltage on page 91.

3 Kit 428878 includes a pilot arc relay (003277), primary contactor (003276), and torch main body (420221).

4 Kit 428879 includes a pilot arc relay (003277), primary contactor (003294), and torch main body (420221).

5 Kit 428641 includes a pilot arc relay (003277), primary contactor (003276), inrush contactor (229697), and torch main body (420221).

6 Kit 428642 includes a pilot arc relay (003277), primary contactor (003294), inrush contactor (229697), and torch main body (420221).

7 Kit 10083902 includes pilot arc relays (003277 and 003298), main contactors (003297 and 003302), and torch main body (420221).

8 Kit 10083903 includes pilot arc relays (003277 and 003298), main contactors (003297 and 003293), and torch main body (420221).

9 Part number can be different. Refer to the *Parts List* in the instruction manual that came with your cutting system.

10 The type of plasma power supply you have has an effect on the quantity that is necessary.

Conditions that have an effect on replacement schedules

This component-replacement schedule is for most cutting systems in usual conditions.

In bad conditions, you must replace components more frequently. If you have questions about the component-replacement schedule for your cutting system, speak to your cutting machine supplier or regional Hypertherm Technical Service team.

Where you keep system components

If you keep consumable parts and torch assemblies in cutting areas or locations that are not clean, they will collect dirt and metal dust that can cause these problems:

- Contamination of unsealed O-rings and seals on the torch heads and torch receptacles
- Decreased life of torch heads and torch receptacles
- Decreased life of the coolant pump
- Unsatisfactory operation of the coolant-flow switch.

It can help to flush the coolant system or clean the coolant-flow switch. If necessary, replace the coolant-flow switch to fully repair the coolant system.

The best solution is to keep consumable parts and torch assemblies in a clean location away from dirt and metal dust. Another solution is to use compressed air to clean consumable parts and torch assemblies before you use them.

If the storage location for your consumable parts and torch assemblies is not clean, replace these components more frequently:

Description	Part number
Quick-disconnect torch receptacle	420220
Quick-disconnect torch	420221
Kit: Coolant pump and motor assembly	428729
Kit: Coolant flow meter	229741

Condition of the consumable parts

If you use consumable parts that have damage, the consumable parts can melt. Copper pieces can break off and go into the coolant and cause these problems:

- Decreased coolant flow
- Increased coolant-flow errors
- Damage to the other consumable parts
- Coolant leaks at the check valve when you change consumable parts
- Inaccurate coolant-flow indications
- Decreased life of the coolant pump
- Decreased life of the check valve

When you do maintenance, examine the coolant filter for copper pieces. If you find copper pieces in the coolant filter, replace the filter and **all** of the coolant. If coolant-flow errors occur after the filter and coolant are replaced, use the troubleshooting procedure in the instruction manual that came with your cutting system.

The best solution is to obey the usage recommendations for consumable parts. This reduces the risk for damage from too much use. If you use consumable parts more frequently than Hypertherm recommends, replace these components more frequently:

Description	Part number
Coolant	028872
Quick-disconnect torch receptacle	420220
Quick-disconnect torch	420221
Coolant filter (fine)	027005
Kit: Coolant pump and motor assembly	428729
Coolant check valve	006113
Kit: Coolant flow meter	229741

Condition of the air supply

Make sure that the air supply is clean. If the air supply contains dirt, water, or oil, components can become clogged or defective. An air supply that is not clean can cause these problems:

- Decreased air flow
- Increased system gas errors
- Decreased cut quality and performance
- False error codes from bad pressure sensors

For recommendations about how to keep your air supply clean, speak to your cutting machine supplier or or regional Hypertherm Technical Service team.

If the air supply is not clean, replace these components more frequently:

Description	Part number
Air filter element	011110
Quick-disconnect torch	420221
Quick-disconnect torch receptacle	420220
Torch lead	_ [1]
Gas solenoid valve, pressure transducer	_ [1]

1 Part number can be different.

Oil in the torch head can cause a fire when the oil reacts with the oxygen-cutting process. If you find oil in the air supply, speak with your cutting table manufacturer or regional Hypertherm Technical Service team.

CAUTION

FIRE HAZARD

Oil in the torch head can cause a fire. Do not let oil into the air supply.

Quantities of metal dust

Plasma cutting makes metal dust. If metal dust collects on the system components, it can decrease the life of the fans and other components.

The coolant-pump motor, primary power source, chopper, or heat exchanger fans can operate more slowly, or the fans can stop working. This can cause temperature-related errors.

The best solution to keep dust from collecting on system components is to clean the surfaces of the system components. Refer to Clean the internal surfaces of the system components on page 60.

If you let metal dust collect on the fans, replace them more frequently:

Description	Part number
Fan assembly: 292 cfm, 48 VDC,120 mm (4.7 inch) diameter	229821
Fan assembly: 890 cfm, 48 VDC, 254 mm (10 inch) diameter	229822

Cut-cycle times

When the cut-cycle time is very short, relays operate more frequently. The system also pierces more frequently during very short cut-cycle times. Examples of very short cut-cycle times are when you cut many small holes or make markings for numbers and letters. Cycle times that are very short can cause these problems:

- Decreased life of pilot arc relay contact pads
- Decreased life of the starting components, such as the high-frequency transformer and the high-frequency ignition PCB
- Increased misfires and error codes

If your usual cut-cycle times are very short, replace these components more frequently:

Description	Part number
Pilot arc relay	003277
Primary contactor 200 V – 240 V (XPR170, XPR300)	003276
Primary contactor 380 V – 600 V (XPR170, XPR300)	429060
Primary contactor 200 V – 240 V (XPR460)	10084340
Primary contactor 380 V – 600 V (XPR460)	10084339

Description	Part number
Quick-disconnect torch	420221
High-frequency, high-voltage transformer (T1) [1]	229838
High-frequency, high-voltage ignition PCB (PCB2) [1] for gas connect consoles with a serial number that is less than 5,000	141354
Spark gap PCB on the ignition PCB [1] for gas connect consoles with a serial number that is more than 5,000	141595

1 These parts are in the gas connect console.

4 Record your cutting-system information

System information

Model number _____ **Serial number** _____

System voltage

200 V / 208 V

220 V

240 V

380 V (CCC)

400 V (CE)

415 V (CE)

440 V

480 V (CSA)

600 V (CSA)

Coolant requirements

22.7 L (6 gal)

26.5 L (7 gal)

30.3 L (8 gal)

34.1 L (9 gal)

37.9 L (10 gal)

41.6 L (11 gal)

45.4 L (12 gal)

Other:

Notes

Maintenance log for XPR cutting systems

You can make copies of this maintenance log to monitor tasks.

Table 6 - Tasks for one-day intervals

Task	1	2	3	4	5	6	7	8	9	10	11	12	13	14	15	16	17	18	19	20	21	22	23	24	25	26	27	28	29	30	31
Do a test of the inlet pressures																															
Examine the gas regulators																															
Examine the shield water regulator (if applicable)																															
Examine the air filter																															
Examine the connections between system components																															
Examine the coolant condition and level																															
Examine the water tube and torch																															
Examine the consumable parts																															
Examine the torch receptacle																															
Examine the torch lead																															

Table 7 - Tasks for one-week, one-month, and six-month intervals

Task	Week beginning:	Week beginning:	Week beginning:	Week beginning:
Do a gas leak test				
Do the weekly coolant check (coolant flow measurements)				
Month (circle one) January February March April May June July August September October November December				
Clean the internal surfaces of the system components				
Examine the contactors				
Examine the relays				
Examine the gas line connections for leaks				
Examine the ground connections				
Examine the table-to-workpiece connection				
Every 6 months - do coolant-system maintenance – Date completed:				