HYPERTHERM®
A Hypertherm Associates Brand

# XPR460®

## Instruction Manual

811530 - Revision 0

English

# Register your new Hypertherm system

**Benefits of registration**

- **Safety:** Registration allows us to contact you in the unlikely event a safety or quality notification is required.
- **Education:** Registration gives you free access to online product training content via the Hypertherm Cutting Institute.
- **Confirmation of ownership:** Registration can serve as proof of purchase in case of an insurance loss.

Go to www.hypertherm.com/registration for easy and fast registration.

If you experience any problems with the product registration process, please contact registration@hypertherm.com.

**For your records**

Serial number: _____

Purchase date: _____

Distributor: _____

Maintenance notes: _____

_____

_____

# XPR460

# Instruction Manual

811530
Revision 0

English
Original Instructions

June 2024

Hypertherm, Inc.
Hanover, NH 03755 USA
www.hypertherm.com

***Hypertherm, Inc.***

*21 Great Hollow Road, P.O. Box 5010*
*Hanover, NH 03755 USA*
*603-643-3441 Tel (Main Office)*
*603-643-5352 Fax (All Departments)*
*info@hypertherm.com (Main Office)*
*800-643-9878 Tel (Technical Service)*
*technical.service@hypertherm.com (Technical Service)*
*800-737-2978 Tel (Customer Service)*
*customer.service@hypertherm.com (Customer Service)*

***Hypertherm México, S.A. de C.V.***

*52 55 5681 8109 Tel*
*52 55 5681 7978 Tel*
*soporte.tecnico@hypertherm.com (Technical Service)*

***Hypertherm Plasmatechnik GmbH***

*Sophie-Scholl-Platz 5*
*63452 Hanau*
*Germany*
*00 800 33 24 97 37 Tel*
*00 800 49 73 73 29 Fax*
*31 (0) 165 596900 Tel (Technical Service)*
*00 800 4973 7843 Tel (Technical Service)*
*technicalservice.emeia@hypertherm.com (Technical Service)*

***Hypertherm (Singapore) Pte Ltd.***

*Solaris @ Kallang 164*
*164 Kallang Way #03-13*
*Singapore 349248, Republic of Singapore*
*65 6841 2489 Tel*
*65 6841 2490 Fax*
*marketing.asia@hypertherm.com (Marketing)*
*techsupportapac@hypertherm.com (Technical Service)*

***Hypertherm Japan Ltd.***

*Level 9, Edobori Center Building*
*2-1-1 Edobori, Nishi-ku*
*Osaka 550-0002 Japan*
*81 6 6225 1183 Tel*
*81 6 6225 1184 Fax*
*htjapan.info@hypertherm.com (Main Office)*
*techsupportapac@hypertherm.com (Technical Service)*

***Hypertherm Europe B.V.***

*Vaartveld 9, 4704 SE*
*Roosendaal, Nederland*
*31 165 596907 Tel*
*31 165 596901 Fax*
*31 165 596908 Tel (Marketing)*
*31 (0) 165 596900 Tel (Technical Service)*
*00 800 4973 7843 Tel (Technical Service)*
*technicalservice.emeia@hypertherm.com (Technical Service)*

***Hypertherm (Shanghai) Trading Co., Ltd.***

*B301, 495 ShangZhong Road*
*Shanghai, 200231*
*PR China*
*86-21-80231122 Tel*
*86-21-80231120 Fax*
*86-21-80231128 Tel (Technical Service)*
*techsupport.china@hypertherm.com (Technical Service)*

***South America & Central America: Hypertherm Brasil Ltda.***

*55 11 5116-8015 Tel*
*tecnico.sa@hypertherm.com (Technical Service)*

***Hypertherm Korea Branch***

*#3904. APEC-ro 17. Heaundae-gu. Busan.*
*Korea 48060*
*82 (0)51 747 0358 Tel*
*82 (0)51 701 0358 Fax*
*marketing.korea@hypertherm.com (Marketing)*
*techsupportapac@hypertherm.com (Technical Service)*

***Hypertherm Pty Limited***

*GPO Box 4836*
*Sydney NSW 2001, Australia*
*61 7 3103 1695 Tel*
*61 7 3219 9010 Fax*
*au.sales@hypertherm.com (Main Office)*
*techsupportapac@hypertherm.com (Technical Service)*

***Hypertherm (India) Thermal Cutting Pvt. Ltd***

*A-18 / B-1 Extension,*
*Mohan Co-Operative Industrial Estate,*
*Mathura Road, New Delhi 110044, India*
*91-11-40521201/ 2/ 3 Tel*
*91-11 40521204 Fax*
*htindia.info@hypertherm.com (Main Office)*
*technicalservice.emeia@hypertherm.com (Technical Service)*

For training and education resources, go to the Hypertherm Cutting Institute (HCI) online at
www.hypertherm.com/hci

## Safety information

WARNING! Before operating any Hypertherm equipment, read the safety instructions in your product's manual, the Safety and Compliance Manual (80669C), Waterjet Safety and Compliance Manual (80943C), and Radio Frequency Warning Manual (80945C). Failure to follow safety instructions can result in personal injury or in damage to equipment.

Copies of the manuals can come with the product in electronic and printed formats. Electronic copies are also on our website. Many manuals are available in multiple languages at www.hypertherm.com/docs.

Beckhoff is a trademark of Beckhoff Automation GmbH. Belden is a trademark of Belden Inc. Chrome is a trademark of Google LLC. EtherCAT is a trademark of Beckhoff Automation GmbH. Hilscher is a trademark of Hilscher Gesellschaft für Systemautomation mbH. Phillips is a trademark of Phillips Screw Company. TORX is a trademark of Acument Global Technologies, LLC. Wi-Fi is a trademark of Wi-Fi Alliance. xPico is a trademark of Lantronix, Inc.

Arc Response Technology, Core, CorePlus, EasyConnect, EDGE, HPR, HPRXD, HyDefinition, Hypertherm, LongLife, MAXPRO200, OMAX, OptiMix, Powermax, ProNest, Sensor, TorchConnect, TrueBevel, True Hole, VWI, X-Definition, XPR, XPR170, XPR300, and XPR460 are trademarks of Hypertherm, Inc. and may be registered in the United States and other countries. All other trademarks are the property of their respective holders.

Environmental stewardship is one of Hypertherm's core values, and it is critical to our success and our customers' success. We are striving to reduce the environmental impact of everything we do. For more information: www.hypertherm.com/environment.

©2024 Hypertherm, Inc.

# Contents

**Electromagnetic Compatibility (EMC)** ..... **23**

**Warranty** ..... **25**

**1 Specifications** ..... **27**

XPR terminology for plasma cutting ..... 27
Plasma cutting system description and components ..... 28
Plasma power supply description ..... 28
Gas connect consoles description ..... 28
TorchConnect console description ..... 29
Cooler description ..... 29
Torch description ..... 30
Plasma power supply specifications ..... 30
Ecodesign requirements for CE models ..... 32
Gas connect console specifications ..... 33
TorchConnect console specifications ..... 34
Cooler specifications ..... 35
Torch specifications ..... 36
Critical raw materials ..... 37
Safety and EMC symbols and marks ..... 38
IEC symbols ..... 40

**2 Qualifications and Requirements** ..... **41**

Document requirements ..... 41
Operator qualifications ..... 41
Qualifications of service personnel ..... 43

System electrical requirements....44
Electrical codes and requirements....44
General input power requirements....44
Line-disconnect switch requirements....45
Circuit breaker or fuse requirements....46
Main power cord requirements....46
Input power requirements for CE units....47
Remote on-off switch requirements....47
Process-gas requirements for all gas connect consoles....48
Plumbing requirements for supply gases....50
Regulator requirements for supply gases....53
Shield-water requirements (VWI and OptiMix)....55
Plumbing and hose requirements for shield water....56
Additional regulator requirement for shield water when pressure is high....56
Remove shield water from the gas connect console....56
Torque specifications for gas or water plumbing and hose connections....57
Coolant requirements....57
Coolant requirements for operation between -10°C – 40°C (14°F – 104°F)....58
Coolant requirements for operation in temperatures above 40°C (104°F)....59
Flow requirements for coolant....60
Purity requirements for coolant water....60
Requirements to put system components in position....61
Configuration with the Core gas connect console....61
Configuration with the CorePlus gas connect console....62
Configuration with VWI or OptiMix gas consoles....63
Worksite requirements for system components....65
Length requirements for hoses, cables, and leads....66
Bend-radius requirements for hoses, cables, and leads....66
Correct sizes for connectors on hoses, cables, and leads....67
Distance requirements between high-frequency cables and control cables....68
Distance requirements for ventilation and access....68
Requirements for ventilation....68
Requirements for service and maintenance access....69
Distance requirements for communications....69
Wireless compliance....69
Torch mounting bracket requirements....70
Torch lifter requirements....70
CNC requirements for plasma cutting systems....70

Remote on-off switch.... 70
Adjustable settings.... 71
Display settings.... 71
Diagnostics and troubleshooting.... 71
Recommended grounding and shielding.... 72
Types of grounding.... 72
Grounding practices.... 73
Example grounding diagram with a plasma cutting system.... 76

3 Installation.... 79
Before you begin installation.... 79
Installation checklist.... 84
Configuration with Core gas connect consoles.... 87
Configuration with CorePlus gas connect consoles.... 89
Configuration with VWI or OptiMix gas connect consoles.... 90
Installation steps.... 91
Put the system components in position.... 91
Put the plasma power supply in position.... 91
Put the cooler in position.... 92
Put the gas connect console in position.... 93
Put the TorchConnect console in position.... 95
Ground the system components.... 98
Remove external panels from the system components.... 101
Prepare the hoses, cables, and leads.... 105
Connect the plasma power supply.... 106
Connect the cooler.... 111
Connect the gas connect console.... 114
Connect the gas connect console (Core, CorePlus) to the TorchConnect console.... 118
Connect the pilot-arc and coolant assembly for Core or CorePlus.... 118
Connect the power, CAN, and 3-gas assembly for Core.... 121
Connect the power, CAN, and 4-gas assembly for CorePlus.... 122
Connect the gas connect console (VWI, OptiMix) to the TorchConnect console.... 123
Connect the pilot-arc, coolant, and shield-water assembly for VWI or OptiMix.... 123
Connect the power, CAN, and 5-gas assembly for VWI or OptiMix.... 126
Supply gas installation.... 127
Install gas regulators.... 132
Connect supply gases to Core or CorePlus.... 132
Connect the supply gases and shield water to VWI or OptiMix.... 134

Install the torch-lead assembly to the torch receptacle....136
Connect the torch lead to the TorchConnect console....141
Remove the torch and consumable parts....143
Install the torch into the torch receptacle....145
Install the torch in the torch mounting bracket....147
Install the consumables....149
Connect electric power to the cutting system....151

4 Connect for Communication....153

Communication methods for XPR cutting systems....153
Requirements for EtherCAT....154
Connect to the plasma power supply with EtherCAT....155
EtherCAT cable specifications....156
Requirements for serial RS-422....156
Connect to the plasma power supply with serial RS-422....157
Pinouts for serial RS-422 interface cables....160
Requirements for discrete....160
Connect to the plasma power supply with discrete....162
Pinouts for the discrete interface cables....164
Pinouts for the discrete cable for the expansion PCB....165
Use the XPR web interface to change the arc voltage output scale....166
Requirements for the XPR web interface....168
Web interface support information....169
Use AP mode to connect....169
Use network mode to connect....171
Select an existing wireless network....173
Set up the wireless network manually....175
Access the XPR web interface after setup in network mode....178
Change the limited AP settings....180
Change the network settings....181
Reset the wireless module....183
Disable the wireless connection temporarily....185
Disable the wireless connection permanently....187
Web interface screen information....188
Plasma power supply screen....190
Gas system screen....192
Log screen....195
Operate screen....195

Other screen....196
Change the device that has control....197
Use ohmic contact sense....198
Example of internal ohmic contact sense....199
Example of external ohmic contact sense....200
Install a remote on-off switch....201
Examples of output circuits....202
Logic interface, active high....202
Logic interface, active low....203
Relay interface....203
This circuit voids the warranty. Do not use....204
Examples of input circuits....205
Relay interface....205
Optocoupler interface....205
Amplified-output interface....206
Redundant remote on-off example interface....207
Install a redundant remote on-off switch....207

**5 Coolant Installation....209**

Overview of cutting system coolant....209
Fill the cutting system with coolant....209

**6 Operation....215**

CNC controls and display....215
Wireless device controls....216
Power-indicator LEDs....216
Sequence of operation....217
Power-up state (1)....217
Initial Checks state (2)....218
Gas Purge/Pump On state (3)....219
Wait for Start state (5)....221
Preflow/Charge DC state (7)....221
Ignite state (8)....222
Pilot Arc state (9)....224
Ramp-up state (11)....226
Steady state (12)....227
Ramp-down state (13)....228

End of Cycle state (14) 228
High-voltage relay stages in the ohmic circuit 229
Automatic purges 229
Gas-change purges for OptiMix or VWI cutting systems 230
Process-setup purges for all plasma cutting systems 230
Process selection 231
Use process IDs for optimal settings 231
Process ID offsets / overrides 232
Cut charts 232
Process core thickness (PCT) 233
Process categories 233
Torch consumables 236
Example configurations for consumables 236
Ferrous (mild steel) example configurations 236
Mild steel – 30 A – $O_2/O_2$ 236
Mild steel – 50 A, 80 A, 130 A, 170 A, 220 A, 300 A, and 460 A – $O_2$/Air 237
Non-ferrous (stainless steel and aluminum) example configurations 238
Non-ferrous – 40 A – $N_2/N_2$ and Air/Air 238
Non-ferrous – 60 A – F5/$N_2$, $N_2/N_2$, $N_2/H_2O$, and Air/Air 239
Non-ferrous – 80 A – F5/$N_2$, $N_2/N_2$, $N_2/H_2O$, Air/Air 239
Non-ferrous – 130 A – $N_2/N_2$, Mix/$N_2$, $N_2/H_2O$ 240
Non-ferrous – 170 A – $N_2/N_2$, Mix/$N_2$, $N_2/H_2O$, Air/Air 241
Non-ferrous – 300 A – $N_2/N_2$, Mix/$N_2$, $N_2/H_2O$ 242
Recommendations for maximum consumable life 243
Arc Response Technology 244
Automatic torch protection 244
Automatic ramp-down error protection 245

**7 Maintenance 247**

Plasma system maintenance 247
Daily inspections 248
Remove the power from the cutting system 249
Examine the gas regulators 250
Examine the shield water regulator (if applicable) 250
Examine the connections and fittings 251
Remove the torch and consumable parts 252
Examine the consumable parts 254

Examine the torch....256
Examine the torch receptacle....258
Examine the torch lead....259
Indicators of emitter wear....259
Measure the pit depth of an electrode....261
Coolant maintenance....262
Calculations for total coolant volume estimates....263
Total estimated volume in liters....263
Total estimated volume in U.S. gallons....263
Coolant replacement and its significance....263
Remove old coolant from the system....264

**8 Diagnostics and Troubleshooting....269**

Safety considerations....269
Initial inspection steps....273
Remove the power from the cutting system....274
Examine each PCB....274
Measure the line voltage between the terminals inside the plasma power supply....276
PCB names and locations....277
Diagnostic code conventions....277
Diagnostic codes....278
General troubleshooting procedures....293
Causes of decreased consumable life....293
Cuts are started or stopped off the surface of the workpiece....293
The cut settings are not correct....294
The cutting material is magnetic....294
Cutting faults that can occur frequently....294
The pilot arc starts but does not transfer to the workpiece....294
The plasma arc does not cut completely through the workpiece, and there is too much sparking on top of the workpiece....294
There is dross on the bottom of the cut....295
The angle of the cut is not square....295
Do a gas leak test....295
Coolant flow measurements....298
Use the CNC or XPR web interface to measure coolant flow....298
Do a container test to measure coolant flow....299
Do a test for continuity between the nozzle and workpiece....301
Safety consideration for the XPR460....301

Corrective action ... 302
Measure resistance from thermistors ... 307
Do an ohmic-contact test ... 308
Troubleshooting procedures for diagnostic codes ... 311
CAN communication troubleshooting for gas connect consoles ... 311
Diagnostic codes 500, 507, 508, 510, 602 ... 311
Symptoms ... 311
Corrective action ... 311
CAN communication troubleshooting for mixing modules in OptiMix consoles ... 313
Diagnostic codes 501, 507, 508, 511 ... 313
Symptoms ... 313
Corrective action ... 314
CAN communication troubleshooting for TorchConnect consoles ... 316
Diagnostic codes 503, 507, 508, 513, 600 ... 316
Symptoms ... 316
Corrective action ... 316
CAN communication troubleshooting for choppers ... 317
Diagnostic codes 504 – 508, 514 – 516, 601, 604, 606 ... 317
Symptoms ... 318
Corrective action ... 318
Troubleshooting for an ignition timeout ... 320
Diagnostic code 520 ... 320
Symptoms ... 320
Corrective action ... 320
Troubleshooting for a pilot arc timeout ... 321
Diagnostic code 521 ... 321
Symptoms ... 321
Corrective action ... 321
Verification ... 321
Troubleshooting for gas flow process timeouts ... 322
Diagnostic codes 522 – 525 ... 322
Symptoms ... 322
Corrective action ... 322
Troubleshooting for low inlet gas pressure ... 322
Diagnostic codes 530, 531, 533 ... 322
Symptoms ... 323
Corrective action ... 323
Verification ... 323

Troubleshooting for low shield water pressure ..... 323
Diagnostic code 532 ..... 323
Symptoms ..... 324
Corrective action ..... 324
Troubleshooting for low shield gas pressure ..... 324
Diagnostic code 534 ..... 324
Symptoms ..... 325
Corrective action ..... 325
Troubleshooting for low coolant flow ..... 326
Diagnostic codes 540, 541, 542 ..... 326
Symptoms ..... 326
Corrective action ..... 326
Troubleshooting for high coolant flow ..... 328
Diagnostic codes 543, 544 ..... 328
Symptoms ..... 328
Corrective action ..... 328
Troubleshooting for low current ..... 329
Diagnostic codes 550, 552 – 554 ..... 329
Symptoms ..... 329
Corrective action ..... 329
Troubleshooting for high current ..... 330
Diagnostic codes 555, 556, 557 ..... 330
Symptoms ..... 330
Corrective action ..... 331
Troubleshooting for over-temperature faults for choppers and coolant ..... 331
Diagnostic codes 560 – 562, 587 ..... 331
Symptoms ..... 332
Corrective action ..... 332
Ohmic resistance values for thermistors ..... 334
Troubleshooting for start switch faults ..... 335
Diagnostic codes 570, 571, 574 – 577 ..... 335
Symptoms ..... 336
Corrective action ..... 336
Troubleshooting for over-temperature faults for inductors and transformers ..... 337
Diagnostic codes 580 – 586, 589, 793 ..... 337
Symptoms ..... 338
Corrective action ..... 338
Troubleshooting for a fan timeout ..... 340

Diagnostic code 588 ..... 340
Symptoms ..... 341
Corrective action ..... 341
Troubleshooting for consumable part failure or no chopper current ..... 341
Diagnostic codes 610 – 615 and 626 – 628 ..... 341
Symptoms ..... 341
Corrective action ..... 342
Troubleshooting for a ramp-down error ..... 342
Diagnostic code 620 ..... 342
Symptoms ..... 342
Corrective action ..... 343
Troubleshooting for high DC bus voltage ..... 343
Diagnostic code 621 ..... 343
Symptoms ..... 343
Corrective action ..... 343
Troubleshooting for low DC bus voltage ..... 343
Diagnostic code 622 ..... 343
Symptoms ..... 344
Corrective action ..... 344
Troubleshooting for idle choppers with current ..... 345
Diagnostic codes 623, 624, 625 ..... 345
Symptoms ..... 345
Corrective action ..... 345
Troubleshooting for current sensor faults ..... 345
Diagnostic code 631 ..... 345
Symptoms ..... 345
Corrective action ..... 346
Troubleshooting for arc timeouts during the Ignite state ..... 346
Diagnostic code 654 ..... 346
Symptoms ..... 346
Corrective action ..... 346
Troubleshooting for current in chopper during preflow ..... 346
Diagnostic code 655 ..... 346
Symptoms ..... 347
Corrective action ..... 347
Troubleshooting for a console reset message ..... 347
Diagnostic code 691 ..... 347
Symptoms ..... 347

Corrective action ... 347
Troubleshooting for low inlet pressure for hydrogen, argon, or nitrogen ... 348
Diagnostic codes 695 – 697 ... 348
Symptoms ... 348
Corrective action ... 348
Permitted inlet pressures to gas connect consoles ... 349
Troubleshooting for low inlet pressure for F5 gas ... 349
Diagnostic code 700 ... 349
Symptoms ... 350
Corrective action ... 350
Troubleshooting for low inlet pressure for water ... 350
Diagnostic code 701 ... 350
Symptoms ... 351
Corrective action ... 351
Troubleshooting for shield gas inlet pressure in the TorchConnect console ... 352
Diagnostic codes 702 – 705 ... 352
Symptoms ... 352
Corrective action ... 353
Permitted inlet pressures to the TorchConnect console ... 353
Troubleshooting for process-gas inlet pressure faults in the TorchConnect console for OptiMix systems ... 354
Diagnostic codes 702, 705, 769, and 770 ... 354
Symptoms ... 354
Corrective action to adjust the $N_2$ regulator ... 354
Corrective action to adjust the Ar regulator ... 356
Troubleshooting for pressure transducer faults ... 356
Diagnostic codes 706 – 715 ... 356
Symptoms ... 357
Corrective action ... 357
Troubleshooting for invalid processes ... 358
Diagnostic code 716 ... 358
Symptoms ... 358
1: invalid id ... 358
2: invalid user ... 358
3: invalid user source ... 359
4: invalid process ... 359
5: not allowed or system not ready ... 359
6: not supported ... 360

Troubleshooting flowchart for diagnostic code 716....360
Troubleshooting for duty cycle limit on proportional valve supply voltage....364
Diagnostic code 719....364
Symptoms....364
Corrective action....364
Troubleshooting for pressure out is greater than pressure in....364
Diagnostic code 720....364
Symptoms....365
Corrective action....365
Troubleshooting for gas mixture faults....365
Diagnostic codes 721 – 723, 726....365
Symptoms....365
Corrective action....366
Troubleshooting for gas mixture communication errors....366
Diagnostic codes 724, 725, 742, 743....366
Symptoms....366
Corrective action....366
Troubleshooting for solenoid valve V1 in the TorchConnect console....367
Diagnostic code 730....367
Symptoms....367
Corrective action....367
Troubleshooting for solenoid valves V4 – V12 in the TorchConnect console....367
Diagnostic codes 733 – 741....367
Symptoms....368
Corrective action....368
Fan diagnostic codes diagram....368
Troubleshooting for low fan speeds – MAGFAN....371
Diagnostic codes 744 – 746....371
Symptoms....371
Corrective action....371
Troubleshooting for low fan speeds – HXFAN....371
Diagnostic codes 748 and 749....371
Symptoms....372
Corrective action....372
Troubleshooting for low fan speeds – CAB FAN 1....372
Diagnostic codes 747 and 750....372
Symptoms....373
Corrective action....373

Troubleshooting for phase errors in choppers ... 373
Diagnostic codes 752, 753, 754 ... 373
Symptoms ... 373
Corrective action ... 374
Troubleshooting for a main contactor fault ... 374
Diagnostic code 764 ... 374
Symptoms ... 374
Corrective action ... 374
Troubleshooting for an inrush contactor fault ... 375
Diagnostic code 765 ... 375
Symptoms ... 375
Corrective action ... 375
Troubleshooting for a pump-enable fault or remote-relay fault ... 375
Diagnostic codes 766, 767 ... 375
Symptoms ... 375
Corrective action ... 376
Troubleshooting for gas inlet pressure faults ... 376
Diagnostic codes 768 – 771 ... 376
Symptoms ... 376
Corrective action ... 377
Troubleshooting for a pilot relay fault ... 377
Diagnostic code 777 ... 377
Symptoms ... 377
Safety consideration for the XPR460 ... 378
Corrective action ... 378
Troubleshooting for high or low chopper voltage ... 379
Diagnostic codes 779, 780, 781 ... 379
Symptoms ... 379
Corrective action ... 379
Troubleshooting for high voltage on the 24 V power supply ... 379
Diagnostic code 784 ... 379
Symptoms ... 380
Corrective action ... 380
PCB information ... 381
Plasma power supply power distribution PCB (141577) diagram ... 381
Plasma power supply control PCB (141545) diagram ... 382
DIP switch positions ... 383
Plasma power supply chopper PCB (141319) diagram ... 385

Plasma power supply start circuit PCB (141360) diagram.....386
Plasma power supply I/O PCB (10085206) diagram.....386
Fan power distribution PCB (141384) diagram.....386
Gas connect console control PCB (141375) diagram.....387
Gas connect console high frequency PCB (141563) diagram.....388
Torch connect console ohmic PCB (141368) diagram.....389
Torch connect console control PCB (141334) diagram.....389
Cooler control PCB (141524) diagram.....390
Cooler power distribution PCB (141573) diagram.....391

**9 Parts List.....393**

Plasma power supply parts.....393
Outer panel parts.....394
Fans.....395
Coolant adapters and manifold in the rear compartment.....395
Coolant adapters and manifolds in plasma power supply.....396
Transformers and inductors.....396
Control parts - 1.....397
Control parts - 2.....398
Wire harness and CAN cables in the plasma power supply.....398
Rear compartment of the plasma power supply.....399
Cooler parts.....399
Cooler outer parts.....400
Cooler interior parts - view 1.....400
Cooler interior parts - view 2.....401
Cooler interior parts - view 3.....402
Cooler interior parts - view 4.....403
Gas connect console parts.....404
Gas connect console high-voltage side parts.....405
Gas connect console manifold side parts.....406
Core gas connect console manifolds and adapters.....407
CorePlus gas connect console manifolds and adapters.....408
VWI gas connect console input and output manifolds and adapters.....409
OptiMix gas connect console input and output manifolds and adapters.....411
VWI and OptiMix gas connect console mixer, resonators, transducers, and valves.....412
Gas connect console wire harness, hose kit, and CAN cables.....413
TorchConnect console parts.....414
TorchConnect console EasyConnect side.....415

TorchConnect console – top....415
TorchConnect console manifold side – view 1....416
TorchConnect console manifold side – view 2....417
TorchConnect console front adapters and valves....418
Torch assembly....419
Torch bracket....419
Consumable starter kits....420
Mild steel consumable starter kit (10083904)....420
Mild steel consumable starter kit with torch (10083905)....421
Other consumable and torch parts....422
Cable, hose, and lead parts....423
Pilot-arc cables with strain relief....423
Negative cables with strain relief....423
Power cable, 120 VAC....424
Power cables, 220 VAC....424
Coolant-hose assemblies (cooler to gas connect console)....425
Coolant-hose assemblies (cooler to plasma power supply)....425
CAN cables....425
Pilot-arc and coolant assemblies (Core, CorePlus)....426
Power, CAN, and 3-gas assemblies (Core)....426
Power, CAN, and 4-gas assemblies (CorePlus)....427
Pilot-arc, coolant, and shield-water assemblies (VWI, OptiMix)....427
Power, CAN, and 5-gas assemblies (VWI, OptiMix)....427
EtherCAT CNC interface cables....428
Discrete CNC interface cables....429
Discrete cables for the expansion PCB....429
Serial CNC interface cables....430
Work cables....431
Torch leads....431
Bevel torch leads....432
Oxygen hoses (blue)....432
Nitrogen or Argon hoses (black)....432
Air hoses (black)....433
Hydrogen or nitrogen-hydrogen (F5) hoses (red)....433
Water (optional shield fluid) hoses (blue)....434
Preventive maintenance kits....434
Tools....435
Recommended spare parts....435

Plasma power supply – recommended spare parts.... 435
Cooler – recommended spare parts.... 436
Gas connect consoles – recommended spare parts.... 436
TorchConnect console – recommended spare parts.... 437
Torch – recommended spare parts.... 437
Descriptions of warning label icons.... 437

**10 Wiring Diagrams.... 439**

Wiring diagram conventions.... 439
Wiring diagram symbols.... 439
Torch symbols.... 441
Valve states during operation.... 441
Valve states by process ID.... 442
Overview (Sheet 1 of 25).... 456
Plasma power supply 1 (Sheet 2 of 25).... 459
Plasma power supply 2 (Sheet 3 of 25).... 462
Plasma power supply 3 (Sheet 4 of 25).... 465
Plasma power supply 4 (Sheet 5 of 25).... 468
Plasma power supply 5 (Sheet 6 of 25).... 471
Plasma power supply 6 (Sheet 7 of 25).... 474
Plasma power supply 7 (Sheet 8 of 25).... 477
Gas connect console 1 (Sheet 9 of 25).... 480
Gas connect console 2 (Sheet 10 of 25).... 483
TorchConnect console (Sheet 11 of 25).... 486
Cooler (Sheet 12 of 25).... 489
Coolant system 1 (Sheet 13 of 25).... 492
Coolant system 2 (Sheet 14 of 25).... 495
Gas system 1 Core (Sheet 15 of 25).... 498
Gas system 2 CorePlus (Sheet 16 of 25).... 501
Gas system 3 VWI (Sheet 17 of 25).... 504
Gas system 4 OptiMix (Sheet 18 of 25).... 507
EtherCAT multi-drop (multi-system) interface (Sheet 19 of 25).... 510
Serial RS-422 and discrete multi-drop (multi-system) interface (Sheet 20 of 25).... 513
Discrete multi-drop (multi-system) interface (Sheet 21 of 25).... 516
EtherCAT connection to EDGE Connect (Sheet 22 of 25).... 519
Discrete and serial RS-422 CNC connections (Sheet 23 of 25).... 522
Discrete CNC connections (Sheet 24 of 25).... 525
Wireless subsystem block diagram (Sheet 25 of 25).... 528

## Electromagnetic Compatibility (EMC) introduction

Hypertherm's CE-marked equipment is built in compliance with standard EN60974-10. The equipment should be installed and used in accordance with the information below to achieve electromagnetic compatibility.

The limits required by EN60974-10 may not be adequate to completely eliminate interference when the affected equipment is in close proximity or has a high degree of sensitivity. In such cases it may be necessary to use other measures to further reduce interference.

This cutting equipment is designed for use only in an industrial environment.

## Installation and use

The user is responsible for installing and using the plasma equipment according to the manufacturer's instructions.

If electromagnetic disturbances are detected then it shall be the responsibility of the user to resolve the situation with the technical assistance of the manufacturer. In some cases this remedial action may be as simple as earthing the cutting circuit, see Earthing of the workpiece. In other cases, it could involve constructing an electromagnetic screen enclosing the power source and the work complete with associated input filters. In all cases, electromagnetic disturbances must be reduced to the point where they are no longer troublesome.

## Assessment of area

Before installing the equipment, the user shall make an assessment of potential electromagnetic problems in the surrounding area. The following shall be taken into account:

a. Other supply cables, control cables, signaling and telephone cables; above, below and adjacent to the cutting equipment.

b. Radio and television transmitters and receivers.

c. Computer and other control equipment.

d. Safety critical equipment, for example guarding of industrial equipment.

e. Health of the people around, for example the use of pacemakers and hearing aids.

f. Equipment used for calibration or measurement.

g. Immunity of other equipment in the environment. User shall ensure that other equipment being used in the environment is compatible. This may require additional protection measures.

h. Time of day that cutting or other activities are to be carried out.

The size of the surrounding area to be considered will depend on the structure of the building and other activities that are taking place. The surrounding area may extend beyond the boundaries of the premises.

## Methods of reducing emissions

### Mains supply

Cutting equipment must be connected to the mains supply according to the manufacturer's recommendations. If interference occurs, it may be necessary to take additional precautions such as filtering of the mains supply.

Consideration should be given to shielding the supply cable of permanently installed cutting equipment, in metallic conduit or equivalent. Shielding should be electrically continuous throughout its length. The shielding should be connected to the cutting mains supply so that good electrical contact is maintained between the conduit and the cutting power source enclosure.

## Maintenance of cutting equipment

The cutting equipment must be routinely maintained according to the manufacturer's recommendations. All access and service doors and covers should be closed and properly fastened when the cutting equipment is in operation. The cutting equipment should not be modified in any way, except as set forth in and in accordance with the manufacturer's written instructions. For example, the spark gaps of arc striking and stabilizing devices should be adjusted and maintained according to the manufacturer's recommendations.

## Cutting cables

The cutting cables should be kept as short as possible and should be positioned close together, running at or close to the floor level.

### Equipotential bonding

Bonding of all metallic components in the cutting installation and adjacent to it should be considered.

However, metallic components bonded to the workpiece will increase the risk that the operator could receive a shock by touching these metallic components and the electrode (nozzle for laser heads) at the same time.

The operator should be insulated from all such bonded metallic components.

### Earthing of the workpiece

Where the workpiece is not bonded to earth for electrical safety, nor connected to earth because of its size and position, for example, ship's hull or building steel work, a connection bonding the workpiece to earth may reduce emissions in some, but not all instances. Care should be taken to prevent the earthing of the workpiece increasing the risk of injury to users, or damage to other electrical equipment. Where necessary, the connection of the workpiece to earth should be made by a direct connection to the workpiece, but in some countries where direct connection is not permitted, the bonding should be achieved by suitable capacitances selected according to national regulations.

Note: The cutting circuit may or may not be earthed for safety reasons. Changing the earthing arrangements should only be authorized by a person who is competent to assess whether the changes will increase the risk of injury, for example, by allowing parallel cutting current return paths which may damage the earth circuits of other equipment. Further guidance is provided in IEC 60974-9, Arc Welding Equipment, Part 9: Installation and Use.

## Screening and shielding

Selective screening and shielding of other cables and equipment in the surrounding area may alleviate problems of interference. Screening of the entire plasma cutting installation may be considered for special applications.

## Attention

Genuine Hypertherm parts are the factory-recommended replacement parts for your Hypertherm system. Any damage or injury caused by the use of other than genuine Hypertherm parts may not be covered by the Hypertherm warranty, and will constitute misuse of the Hypertherm Product.

You are solely responsible for the safe use of the Product. Hypertherm does not and cannot make any guarantee or warranty regarding the safe use of the product in your environment.

## General

Hypertherm, Inc. warrants that its Products shall be free from defects in materials and workmanship for the specific periods of time set forth herein and as follows: if Hypertherm is notified of a defect (i) with respect to the plasma power supply within a period of two (2) years from the date of its delivery to you, with the exception of Powermax brand power supplies, which shall be within a period of three (3) years from the date of delivery to you, and (ii) with respect to the torch and leads within a period of one (1) year from its date of delivery to you, with the exception of the HPRXD short torch with integrated lead, which shall be within a period of six (6) months from the date of delivery to you, and with respect to torch lifter assemblies within a period of one (1) year from its date of delivery to you, and with respect to Automation products one (1) year from its date of delivery to you, with the exception of the EDGE Connect CNC, EDGE Connect T CNC, EDGE Connect TC CNC, EDGE Pro CNC, EDGE Pro Ti CNC, MicroEDGE Pro CNC, and ArcGlide THC, which shall be within a period of two (2) years from the date of delivery to you, and (iii) with respect to HyIntensity fiber laser components within a period of two (2) years from the date of its delivery to you, with the exception of laser heads and beam delivery cables, which shall be within a period of one (1) year from its date of delivery to you.

All third-party engines, engine accessories, alternators, and alternator accessories are covered by the respective manufacturers' warranties and not covered by this warranty.

This warranty shall not apply to any Powermax brand power supplies that have been used with phase converters. In addition, Hypertherm does not warranty systems that have been damaged as a result of poor power quality, whether from phase converters or incoming line power. This warranty shall not apply to any product which has been incorrectly installed, modified, or otherwise damaged.

Hypertherm provides repair, replacement or adjustment of the Product as the sole and exclusive remedy, if and only if the warranty set forth herein properly is invoked and applies. Hypertherm, at its sole option, shall repair, replace, or adjust, free of charge, any defective Products covered by this warranty which shall be returned with Hypertherm's prior authorization (which shall not be unreasonably withheld), properly packed, to Hypertherm's place of business in Hanover, New Hampshire, or to an authorized Hypertherm repair facility, all costs, insurance and freight pre paid by the customer. Hypertherm shall not be liable for any repairs, replacement, or adjustments of Products covered by this warranty, except those made pursuant to this paragraph and with Hypertherm's prior written consent.

The warranty set forth above is exclusive and is in lieu of all other warranties, express, implied, statutory, or otherwise with respect to the Products or as to the results which may be obtained therefrom, and all implied warranties or conditions of quality or of merchantability or fitness for a particular purpose or against infringement. The foregoing shall constitute the sole and exclusive remedy for any breach by Hypertherm of its warranty.

Distributors/OEMs may offer different or additional warranties, but Distributors/OEMs are not authorized to give any additional warranty protection to you or make any representation to you purporting to be binding upon Hypertherm.

## Patent indemnity

Except only in cases of products not manufactured by Hypertherm or manufactured by a person other than Hypertherm not in strict conformity with Hypertherm's specifications and in cases of designs, processes, formulae, or combinations not developed or purported to be developed by Hypertherm, Hypertherm will have the right to defend or settle, at its own expense, any suit or proceeding brought against you alleging that the use of the Hypertherm product, alone and not in combination with any other product not supplied by Hypertherm, infringes any patent of any third party. You shall notify Hypertherm promptly upon learning of any action or threatened action in connection with any such alleged infringement (and in any event no longer than fourteen (14) days after learning of any action or threat of action), and Hypertherm's obligation to defend shall be conditioned upon Hypertherm's sole control of, and the indemnified party's cooperation and assistance in, the defense of the claim.

## Limitation of liability

**In no event shall Hypertherm be liable to any person or entity for any incidental, consequential direct, indirect, punitive or exemplary damages (including but not limited to lost profits) regardless of whether such liability is based on breach of contract, tort, strict liability, breach of warranty, failure of essential purpose, or otherwise, and even if advised of the possibility of such damages. Hypertherm shall not be liable for any losses to Distributor based on down time, lost production or lost profits. It is the intention of the Distributor and Hypertherm that this provision be construed by a court as being the broadest limitation of liability consistent with applicable law.**

## National and local codes

National and local codes governing plumbing and electrical installation shall take precedence over any instructions contained in this manual. In no event shall Hypertherm be liable for injury to persons or property damage by reason of any code violation or poor work practices.

## Liability cap

**In no event shall Hypertherm's liability, if any, whether such liability is based on breach of contract, tort, strict liability, breach of warranties, failure of essential purpose or otherwise, for any claim, action, suit or proceeding (whether in court, arbitration, regulatory proceeding or otherwise) arising out of or relating to the use of the Products exceed in the aggregate the amount paid for the Products that gave rise to such claim.**

## Insurance

At all times you will have and maintain insurance in such quantities and types, and with coverage sufficient and appropriate to defend and to hold Hypertherm harmless in the event of any cause of action arising from the use of the products.

## Transfer of rights

You may transfer any remaining rights you may have hereunder only in connection with the sale of all or substantially all of your assets or capital stock to a successor in interest who agrees to be bound by all of the terms and conditions of this Warranty. Within thirty (30) days before any such transfer occurs, you agree to notify in writing Hypertherm, which reserves the right of approval. Should you fail timely to notify Hypertherm and seek its approval as set forth herein, the Warranty set forth herein shall be null and void and you will have no further recourse against Hypertherm under the Warranty or otherwise.

## Waterjet product warranty coverage

| Product | Parts coverage |
|---|---|
| HyPrecision pumps | 27 months from the ship date, or 24 months from the date of proven installation, or 4,000 hours, whichever occurs first |
| PowerDredge abrasive removal system | 15 months from the ship date or 12 months from the date of proven installation, whichever occurs first |
| EcoSift abrasive recycling system | 15 months from the ship date or 12 months from the date of proven installation, whichever occurs first |
| Abrasive metering devices | 15 months from the ship date or 12 months from the date of proven installation, whichever occurs first |
| On/off valve air actuators | 15 months from the ship date or 12 months from the date of proven installation, whichever occurs first |
| Diamond orifices | 600 hours of use with the use of a thimble filter and compliance with Hypertherm's water quality requirements |

Consumable parts are not covered by this warranty. Consumable parts include, but are not limited to, high-pressure water seals, check valves, cylinders, bleed-down valves, low-pressure seals, high-pressure tubing, low- and high-pressure water filters and abrasive collection bags. All third-party pumps, pump accessories, hoppers, hopper accessories, dryer boxes, dryer box accessories and plumbing accessories are covered by the respective manufacturers' warranties and not covered by this warranty.

# 1 Specifications

## XPR terminology for plasma cutting

**XPR® cutting system**

The plasma power supply, gas connect console, torch connect console, cooler, and torch.

**Cutting system or cutting machine**

The XPR cutting system, Computer Numerical Control (CNC), torch lifter, cutting table, and other components.

**Wet process**

Any process that uses water as a shield fluid.

**Dry process**

Any process that does not use water as a shield fluid.

**Ferrous**

Mild steel

**Non-ferrous**

Stainless steel and aluminum

**Gases and fluid**

Hydrogen ($H_2$), argon (Ar), nitrogen ($N_2$), oxygen ($O_2$), water ($H_2O$), F5 (95% nitrogen, 5% hydrogen)

**Mixed-fuel gas**

A mixture of $H_2$-Ar-$N_2$ supplied by the OptiMix™ gas connect console.

# Plasma cutting system description and components

The plasma cutting system has at least four primary components and can cut a wide range of metals.

XPR plasma cutting systems are made for indoor use with correct ventilation to cut a wide range of thicknesses of mild steel, stainless steel, and aluminum.

An XPR plasma cutting system has these primary components:

- Plasma power supply
- Gas connect console
- TorchConnect™ console
- Cooler
- Torch

## Plasma power supply description

The plasma power supply is a 460 A, 222 VDC constant-current supply. It has fans to cool the electronic components.

The plasma power supply has support for EtherCAT®, wireless, RS-422 serial, and discrete communication protocols to communicate with a CNC or wireless device.

The power-indicator Light Emitting Diode (LED) on the plasma power supply identifies power status:

- It illuminates amber when the plasma power supply is receiving electric power and the remote on-off switch is in the OFF position.
- It illuminates green when the plasma power supply is receiving electric power and both the standard remote on-off switch and the redundant remote on-off switch (if enabled) are in the ON position.

## Gas connect consoles description

There are four types of gas connect consoles: Core™, CorePlus™, VWI™ (vented water injection), and OptiMix.

Each type of gas connect console provides a different set of gas-control capabilities. This can include gas-metering functions, based on the type of gas connect console and gases. The gas connect console has a control Printed Circuit Board (PCB) and an ignition PCB. If your XPR cutting system is equipped with an

OptiMix gas connect console, there is also a gas mixer that has its own control PCB. A green power LED illuminates when power is supplied to the console.

For some cutting systems, a remote on-off switch and redundant remote on-switch (if enabled) control the power that goes to the console.

The CorePlus gas connect console has many of the same features as the Core console. The primary difference is that CorePlus adds a gas line for Argon.

## TorchConnect console description

The TorchConnect console supplies all power, gas, and cooling connections for connection to the torch.

The TorchConnect console has proportional valves, solenoid valves, and pressure transducers. The TorchConnect console also has a control PCB and an ohmic contact PCB. A power-indicator LED illuminates when power is supplied to the console.

For some cutting systems, a remote on-off switch controls the power that goes to the console.

## Cooler description

The cooler is a requirement for cutting system operation. It contains a heat-exchanger and two fans and supplies coolant to the liquid-cooled components of the cutting system.

***NOTICE***

**LOW COOLANT LEVELS CAN DAMAGE THE CUTTING SYSTEM AND COOLANT PUMP**

There is a risk of serious damage to the cutting system and to the coolant pump if you operate the cutting system with no coolant or with low coolant. If your coolant pump is damaged, pump replacement can be necessary.

Never operate the cutting system if you get a low coolant level notice.

Inside of the cooler are the following components:

- Reservoir
- Pump
- Flow meter
- Filter for coolant
- Heat exchanger

- Two fans for cooling
- Control PCB
- Power distribution PCB for the cooler
- Power distribution PCB for the cooler fans

A green power-indicator LED on the front illuminates when power is supplied to the cooler.

The cutting system ships without coolant in the reservoir. Before you operate the cutting system, you must fill it with coolant.

## Torch description

The torch assembly has a torch mount-sleeve, torch receptacle, torch, and water tube.

The torch receptacle has a gas-selection valve. Consumables are installed on the torch.

# Plasma power supply specifications

The part number and some specifications differ for each type of plasma power supply.

**Figure 1 -** Plasma power supply dimensions

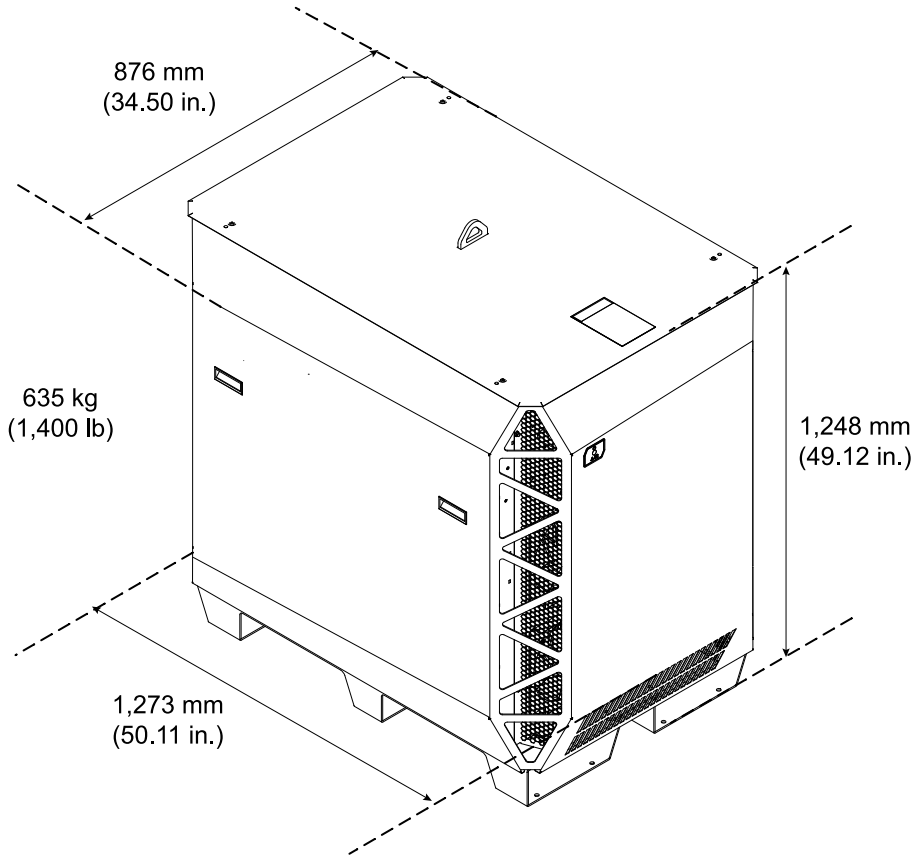

**Table 1 -** Plasma power supply general specifications

| | |
|---|---|
| Maximum open-circuit voltage ($U_0$) | 360 VDC |
| Maximum output current ($I_2$) | 460 A |
| Output voltage ($U_2$) | 50 VDC – 222 VDC |
| Duty cycle rating (X) | 100% at 102.12 kW, 40°C (104°F) |
| Operational ambient temperature range | >0°C - 40°C (>32°F - 104°F) - Applies only to cutting systems that use water as a shield fluid.<br>-10 °C - 40°C (14°F - 104°F) - Applies only to cutting systems that do not use water as a shield fluid.<br>Only VWI- and OptiMix-equipped cutting systems can use water as a shield fluid. |
| Power factor (cosθ) | 0.98 at 102.12 kW |
| Cooling | Forced air (Class F) |
| Insulation | Class H |
| EMC emissions classification (CE models only) | Class A |
| Lift points | Top lift eye<br>Bottom lift truck slots |
| Lift eye weight rating | 782 kg (1,725 lb) |
| Weight | 635 kg (1,400 lb) |

**Table 2 -** Plasma power supply part numbers and specifications

| Part number | Voltage ($U_1$) | Phase | Fre-quency | Rated input current at kW output ($I_1$) | Regulatory approval Safety/EMC | Power (± 10%) ($U_1$ X $I_1$ X1.73) |
|---|---|---|---|---|---|---|
| 078650 | 200 VAC | 3 | 50 Hz - 60 Hz | 334 A | cCSAus | 115.78 kVA |
| 078651 | 208 VAC | | 60 Hz | 322 A | cCSAus | |
| 078652 | 220 VAC | | 50 Hz - 60 Hz | 304 A | cCSAus | |
| 078653 | 240 VAC | | 60 Hz | 279 A | cCSAus | |
| 078654 | 380 VAC | | 50 Hz - 60 Hz | 176 A | CCC | |
| 078655 | 400 VAC | | 50 Hz - 60 Hz | 167 A | CE, RCM, EAC, UKr, and AAA | |
| 078656 | 415 VAC | | 50 Hz | 161 A | CE, RCM, EAC, UKr, and AAA | |
| 078657 | 440 VAC | | 60 Hz | 152 A | cCSAus | |
| 078658 | 480 VAC | | 60 Hz | 139 A | cCSAus | |
| 078659 | 600 VAC | | 60 Hz | 112 A | cCSAus | |

# Ecodesign requirements for CE models

**Table 3 -** Ecodesign requirements and data

| Ecodesign requirement | Idle | With load | Description |
|---|---|---|---|
| Output current | – | 460.86 A | Measured at the rated duty cycle for the system at the highest output power. |
| Output voltage | – | 222.59 VDC | |
| Output active power | – | 102.53 kW | |

**Table 3 -** Ecodesign requirements and data (continued)

| Ecodesign requirement | Idle | With load | Description |
|---|---|---|---|
| Root Mean Square (RMS) of the supply voltage | 405.80 VAC | 401.85 VAC | Measured at idle state and at the rated duty cycle for the system at the highest output power. |
| Supply active power | 34 W | 110.44 kW | |
| Total harmonic distortion of the supply voltage (UTHD) | 1.16% | 7.04% | |
| Idle state power consumption by the power source | 34 W | – | Measured at idle state. [1] |
| Efficiency | – | 92.84% | Calculated at the rated duty cycle for the system at the highest output power. |

1 External devices were disconnected during idle measurement.

# Gas connect console specifications

The part number and some specifications differ for each type of gas connect console.

Do not remove the inlet check valves from the gas connect console.

**Figure 2 -** Gas connect console dimensions

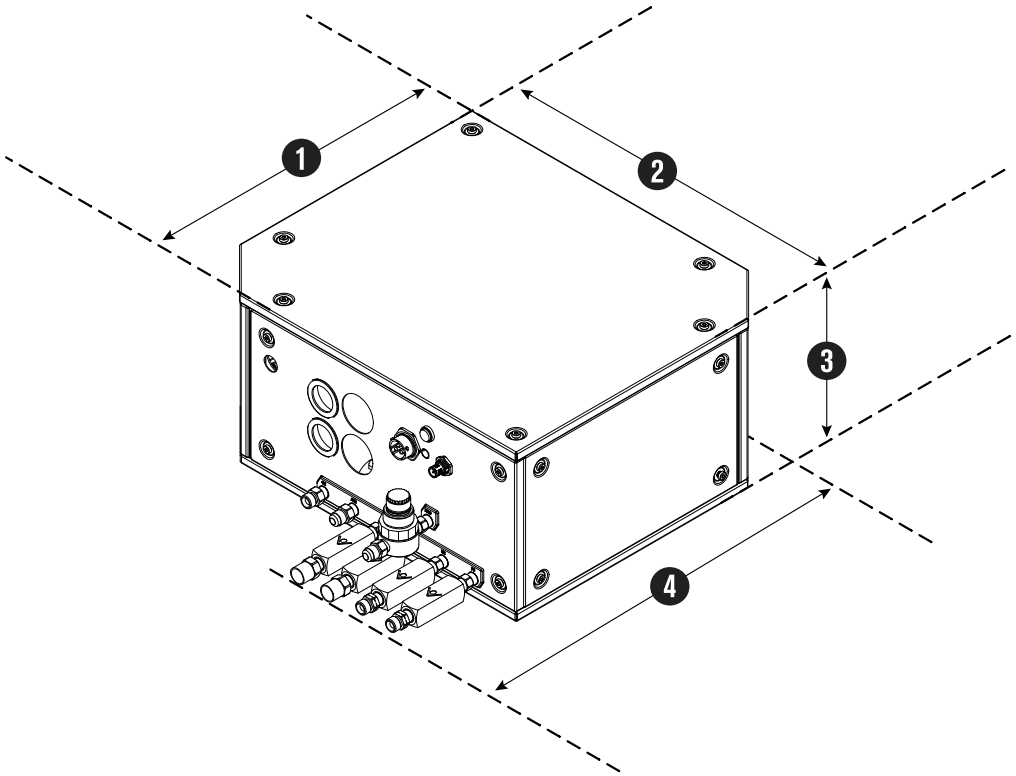

**Table 4 -** Dimensions, weight, and part number for each gas connect console

| Gas connect console | Part number | Dimension 1 | Dimension 2 | Dimension 3 | Dimension 4 (with fittings) | Weight |
|---|---|---|---|---|---|---|
| **Core** | 078631 | 374.65 mm (14.75 in.) | 383.80 mm (15.11 in.) | 205.99 mm (8.12 in.) | 431.80 mm (17.00 in.) | 16.2 kg (35.7 lb) |
| **CorePlus** | 078662 | | | | 433.92 mm (17.08 in.) | 16.8 kg (37.1 lb) |
| **VWI** | 078632 | | | | 522.22 mm (20.56 in.) | 19.1 kg (42.1 lb) |
| **OptiMix** | 078633 | | 434.59 mm (17.11 in.) | | 524.00 mm (20.63 in.) | 26.0 kg (57.3 lb) |

For mounting dimensions, refer to Put the gas connect console in position on page 93.

# TorchConnect console specifications

There is one TorchConnect console for all XPR system configurations. Use these dimensions for console mounting or placement.

Do not remove the inlet check valves from the TorchConnect console.

**Figure 3 -** TorchConnect console dimensions and weight

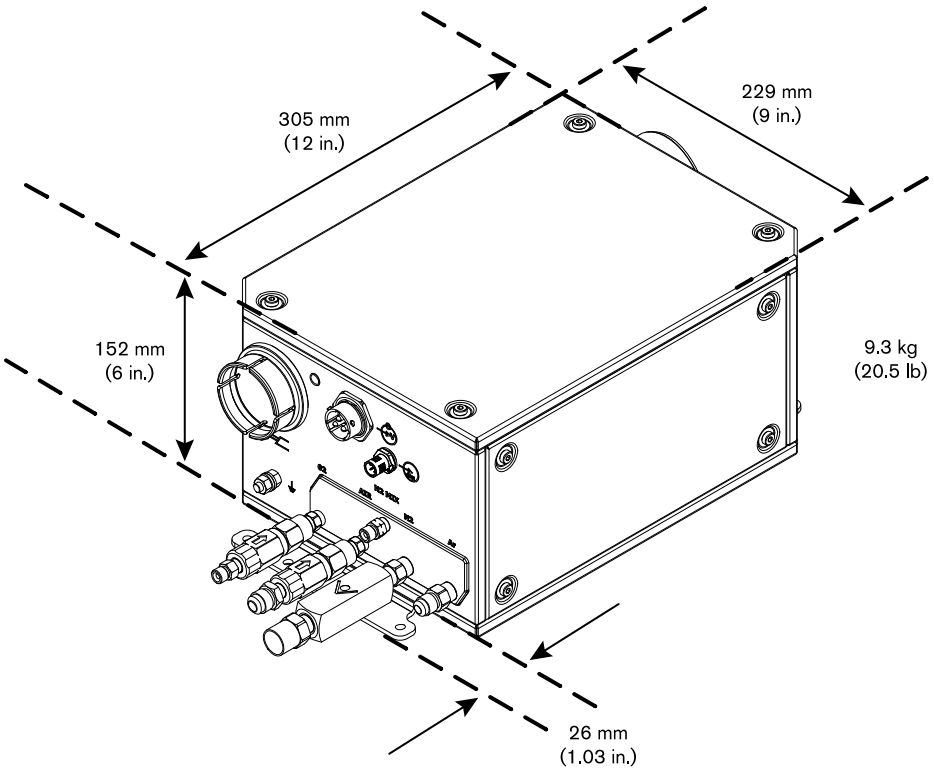


The factory location for the mounting brackets is on the bottom of the TorchConnect console. However, you can move the mounting brackets to either side. Console placement with the torch lead connection on the bottom keeps to a minimum the risk of leaked water or coolant collecting inside of the console. Water or coolant collection inside of the TorchConnect console can cause damage to internal electric components.

For mounting dimensions, refer to Put the TorchConnect console in position on page 95.

# Cooler specifications

Use these dimensions for cooler mounting or placement.

Hypertherm® recommends a minimum separation distance of 1 meter (3.3 feet) between the cooler and other system components, or between the cooler and an obstacle.

The lift eye weight rating for the cooler is 91 kg (200 lb).

**Figure 4 -** Cooler weight and dimensions

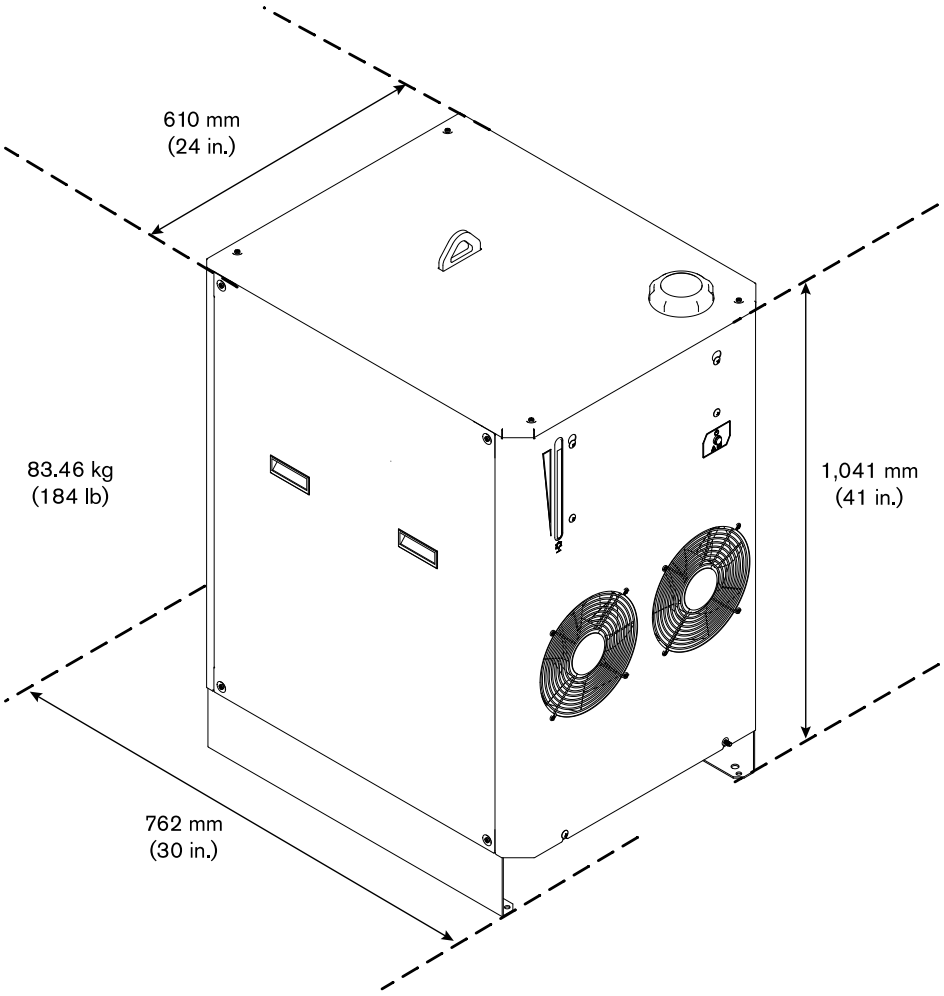


# Torch specifications

The dimensions and weight differ for each type of torch and torch sleeve. But the general specifications are the same for all torch configurations.

**Figure 5 -** Torch dimensions

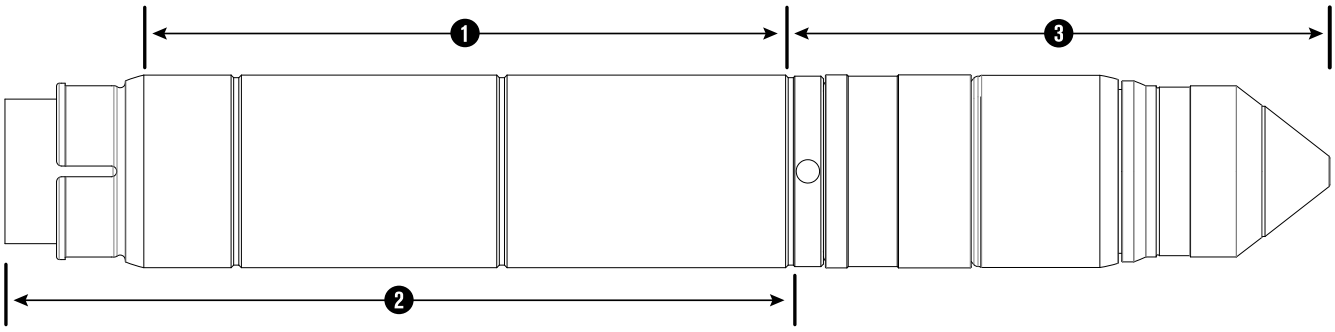

**Table 5 -** Torch and sleeve characteristics

| Sleeve type | Clamp-surface length (1) | Overall sleeve length (2) | Quick-disconnect torch with consumables (3) | Combined weight (torch head, receptacle, consumables) | Combined weight with sleeve |
|---|---|---|---|---|---|
| Short | 111.7 mm (4.4 in.) | 155 mm (6.1 in.) | 160.8 mm (6.33 in.) | 1.4 kg (3 lb) | 1.5 kg (3.3 lb) |
| Standard | 189.6 mm (7.5 in.) | 233 mm (9.2 in.) | | | 1.6 kg (3.6 lb) |
| Extended | 268.1 mm (10.6 in.) | 311 mm (12.3 in.) | | | 1.7 kg (3.9 lb) |

The part number and some specifications for your torch can change because of torch sleeve dimensions and other features. Refer to Torch assembly on page 419.

**Table 6 -** General torch specifications

| | |
|---|---|
| **Rated arc striking voltage** | 16.3 kV |
| **Maximum gas pressure at inlet** | 7.9 bar, 792 kPa (115 psi) |
| **Minimum gas pressure at inlet** | 7.2 bar, 723 kPa (105 psi) |
| **Maximum torch-side and torch-front force** | 22.5 kg (50 lb) |

# Critical raw materials

| Critical raw material | Components that contain more than 1 gram |
|---|---|
| Borate | Each PCB, torch, torch mounting sleeve |
| Magnesium | Heatsinks, cold plates |
| Natural graphite | Pump motor, resistors |
| Phosphorus | Sheet metal panels |
| Rare earth elements (heavy and light) | Torch breakaway, pump motor |

| Critical raw material | Components that contain more than 1 gram |
|---|---|
| Silicon metal | Heatsinks, cold plates, transformers, inductors, Insulated-gate Bipolar Transistor (IGBT) modules |
| Tantalum | Capacitors |
| Tungsten | Power resistors |

# Safety and EMC symbols and marks

You can see different safety and EMC symbols and marks on your system. Each image identifies a specific regional certification.

Your product may have one or more of the following marks on or near the data plate. Because of differences and conflicts in national regulations, not all marks are applied to every version of a product.

S mark

The S mark indicates that the power supply and torch are suitable for operations carried out in environments with increased hazard of electrical shock according to IEC 60974-1.

CSA mark

Products with a CSA mark meet the United States and Canadian regulations for product safety. The products were evaluated, tested, and certified by CSA-International. Alternatively, the product may have a mark by one of the other Nationally Recognized Testing Laboratories (NRTL) accredited in both the United States and Canada, such as UL or TÜV.

CE mark

The CE marking signifies the manufacturer's declaration of conformity to applicable European directives and standards. Only those versions of products with a CE marking located on or near the data plate comply with European Directives. Applicable directives may include the European Low Voltage Directive, the European Electromagnetic Compatibility (EMC) Directive, the Radio Equipment Directive (RED), and the Restriction of Hazardous Substances (RoHS) Directive. See the European CE Declaration of Conformity for details.

Eurasian Customs Union (CU) mark

CE versions of products that include an EAC mark of conformity meet the product safety and EMC requirements for export to Russia, Belarus, and Kazakhstan.

GOST-TR mark

CE versions of products that include a GOST-TR mark of conformity meet the product safety and EMC requirements for export to the Russian Federation.

RCM mark

CE versions of products with an RCM mark comply with the EMC and safety regulations required for sale in Australia and New Zealand.

CCC mark

The China Compulsory Certification (CCC) mark indicates that the product has been tested and found compliant with product safety regulations required for sale in China.

UkrSEPRO mark

The CE versions of products that include a UkrSEPRO mark of conformity meet the product safety and EMC requirements for export to the Ukraine.

Serbian AAA mark

CE versions of products that include a AAA Serbian mark meet the product safety and EMC requirements for export to Serbia.

RoHS mark

The RoHS mark indicates that the product meets the requirements of the European Restriction of Hazardous Substances (RoHS) Directive.

United Kingdom Conformity Assessed mark

CE versions of products that include a UKCA mark of conformity meet the product safety, EMC, RF, and RoHS requirements for export to the UK.

# IEC symbols

You can see different IEC symbols on the system. Each image has a specific meaning in the context of operating a plasma cutting system.

The following symbols can appear on the data plate, control labels, and switches.

Direct current (DC)

Alternating current (AC)

Plasma torch cutting

Gouging

AC input power connection

The terminal for the external protective (earth) (PE) conductor



Power is ON

Power is OFF

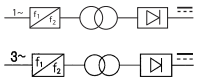


A 1-phase or 3-phase inverter-based power source

Volt/amperage curve, “drooping” characteristic

# 2 Qualifications and Requirements

## Document requirements

This manual refers to several other documents. These documents include:

- *XPR Cut Charts Instruction Manual (809830)*
- *CNC Communication Protocol for the XPR Cutting System (809810)*
- *XPR Preventive Maintenance Program (PMP) Instruction Manual (809490)*
- *XPR Firmware Updates Field Service Bulletin (809820)*

If you do not have these documents, technical documentation is available at www.hypertherm.com/support460 and www.hypertherm.com/docs.

Technical documentation is current as of the date of its release. Subsequent revisions are possible. Refer to www.hypertherm.com/docs for the most recent revisions of released documents.

## Operator qualifications

A person is considered qualified to operate the cutting system if he or she is trained and knowledgeable about cutting system equipment construction, operation, and work methods, and about how to recognize and avoid hazards that can be present with certain cutting system equipment or work methods.

## ⚠ WARNING

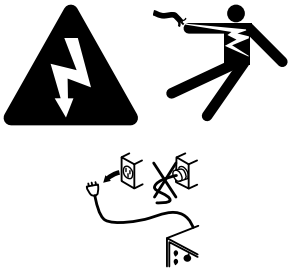

**ELECTRIC SHOCK CAN KILL**

The plasma power supply contains dangerous electric voltages that can seriously injure or kill you. Even if the plasma power supply is turned OFF, you can still get a serious electric shock if the plasma power supply remains connected to an electric power source.

Use extreme caution if you do diagnosis or maintenance tasks when the plasma power supply remains connected to an electric power source and the outer cover or panels are removed. All work that requires removal of the plasma power supply outer cover or panels must be done by a qualified technician. Refer to the *Safety and Compliance Manual (80669C)* for more safety information.

For your safety and for the best results:

- **Never** operate the cutting system unless you are qualified to do so.
- Follow NFPA70E Section 85 in North America.
- Follow IEC 60364 series outside of North America.
- Follow OSHA Section1910.331-335 in North America for 600 volts or less.
- Follow all national and local electrical safety requirements for both operator and service personnel.
- **Always** read, understand, and follow all of the safety instructions in this manual, the *Safety and Compliance Manual (80669C)*, and on the labels that are on the cutting system.
- Get adequate operator training from a knowledgeable source **before** operation. Adequate training topics include (but are not limited to) the following:
  - How to start and stop the cutting system during routine operation and in an emergency.
  - Conditions and actions that can cause injuries to people or damage cutting system equipment.
  - How to operate all controls.
  - How to identify and respond to fault conditions.
  - How to do maintenance.
  - A copy of the instruction manual.
- Do **not** operate the cutting system if you cannot follow all of the safety instructions or if you cannot satisfy the minimum operator qualifications. Refer to the *Safety and Compliance Manual (80669C)*, *Radio Frequency Warning Manual (80945C)*, and Before you begin installation on page 79.

Additional qualifications apply for personnel who do maintenance and troubleshooting. Refer to Qualifications of service personnel on page 43.

# Qualifications of service personnel

It can be hazardous to do service and maintenance on industrial cutting systems and equipment.

**WARNING**

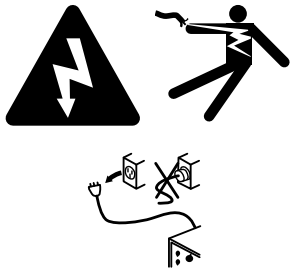

**ELECTRIC SHOCK CAN KILL**

The plasma power supply contains dangerous electric voltages that can seriously injure or kill you. Even if the plasma power supply is turned OFF, you can still get a serious electric shock if the plasma power supply remains connected to an electric power source.

Use extreme caution if you do diagnosis or maintenance tasks when the plasma power supply remains connected to an electric power source and the outer cover or panels are removed. All work that requires removal of the plasma power supply outer cover or panels must be done by a qualified technician. Refer to the *Safety and Compliance Manual (80669C)* for more safety information.

For your safety and for the best results:

- **Always** read, understand, and follow all of the safety instructions in this manual, the *Safety and Compliance Manual (80669C)*, and on the labels that are on the cutting system.
- Get adequate training from a knowledgeable source **before** you do any service or maintenance on the cutting system or equipment.

  The entity responsible for workplace safety where your XPR cutting system is used must do a risk assessment and establish the criteria for service personnel training and qualifications.

- Do not do any service or maintenance on the cutting system or equipment if you cannot follow all of the safety instructions or if you cannot satisfy the minimum service-personnel qualifications set by workplace safety at your organization. Refer to the *Safety and Compliance Manual (80669C)*, *Radio Frequency Warning Manual (80945C)*, and Before you begin installation on page 79.
- Contact a professional repair person who has a license.

# System electrical requirements

## Electrical codes and requirements

- Follow all national and local electrical codes and safety requirements, including requirements for correct electrical system design and installation.
- Speak with a licensed electrician for information about the codes in your location.

## General input power requirements

The switches, fuses, and cords that you supply must comply with all applicable national and local electrical codes and requirements, and be installed by a licensed electrician.

**WARNING**

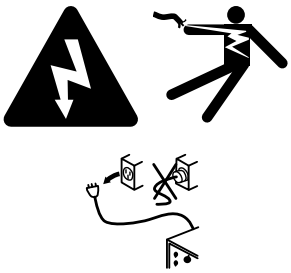

**ELECTRIC SHOCK CAN KILL**

The plasma power supply contains dangerous electric voltages that can seriously injure or kill you. Even if the plasma power supply is turned OFF, you can still get a serious electric shock if the plasma power supply remains connected to an electric power source.

Use extreme caution if you do diagnosis or maintenance tasks when the plasma power supply remains connected to an electric power source and the outer cover or panels are removed. All work that requires removal of the plasma power supply outer cover or panels must be done by a qualified technician. Refer to the *Safety and Compliance Manual (80669C)* for more safety information.

As an installer or user, you are responsible for supplying all of the switches, time-delay fuses, and power cords necessary for cutting system installation and operation at the installation site.

General input power requirements are in the following table. For specific requirements for switches, fuses, and cords, refer to Line-disconnect switch requirements on page 45, Circuit breaker or fuse requirements on page 46, and Main power cord requirements on page 46.

**Table 7 -** Input power requirements

| Part number | Input voltage | Phase | Rated input current at kW output | Recommended time-delay fuse size | Recommended size for the main power cord 90°C (194°F) [1] | Power |
|---|---|---|---|---|---|---|
| 078650 | 200 VAC | 3 | 334 A | 450 A | 404.1 $mm^2$ (600 MCM) [2] | 115.78 kVA |
| 078651 | 208 VAC | | 322 A | 400 A | 335.7 $mm^2$ (500 MCM) [2] | |
| 078652 | 220 VAC | | 304 A | 400 A | 335.7 $mm^2$ (500 MCM) [2] | |
| 078653 | 240 VAC | | 279 A | 350 A | 235 $mm^2$ (350 MCM) [2] | |
| 078654 | 380 VAC | | 176 A | 225 A | 112.4 $mm^2$ (3/0 AWG) [2] | |
| 078655 | 400 VAC | | 167 A | 220 A | 112.4 $mm^2$ (3/0 AWG) [2] | |
| 078656 | 415 VAC | | 161 A | 200 A | 112.4 $mm^2$ (3/0 AWG) | |
| 078657 | 440 VAC | | 152 A | 200 A | 112.4 $mm^2$ (3/0 AWG) | |
| 078658 | 480 VAC | | 139 A | 175 A | 89 $mm^2$ (2/0 AWG) | |
| 078659 | 600 VAC | | 112 A | 150 A | 70.5 $mm^2$ (1/0 AWG) | |

1 AWG requirements must comply with the latest version of the U.S. National Electric Code (in North America) or the latest electric wiring and installation requirements (based on the codes in your location). This table is for reference only; the requirements for your location can be different. Comply with all national and local electrical codes in your location.

2 Differences in cross-sectional diameters $mm^2$depend on the strand variations of each cable.

The strain relief for the input power cord that comes with the plasma power supply is sized correctly. Speak with a licensed electrician to make sure that your main power cord size and length comply with the codes in your location.

## Line-disconnect switch requirements

As an installer or user, you must supply a separate line-disconnect switch for the plasma power supply.

A means for disconnecting the cutting system shall be provided according to the installation, safety, and emergency requirements for the local codes and regulations, taking into account the input power requirements. Hypertherm does not supply this means of disconnection.

## Circuit breaker or fuse requirements

You must use a circuit breaker or fuse that is sufficient to support the plasma cutting system.

For main feed protection, choose a circuit breaker or fuse that is large enough to withstand all branch-feed loads for both inrush and steady-state current. Refer to Table 7 on page 45 for the recommended time-delay fuse sizes.

As an installer or user, you must choose time-delay fuses and circuit breakers that can withstand inrush current that is up to 15 times the rated input current for 0.01 seconds and up to 10 times the rated input current for 0.1 seconds.

The size requirements for breakers or fuses at your site can change because of the following:

- Local line conditions (such as source and line impedance and voltage fluctuations)
- Product inrush characteristics
- Regulatory requirements

Always follow the national and local electrical safety requirements for your location, including requirements for correct electrical system design and installation. Speak with a licensed electrician for more information about the codes in your location.

If time-delay, high-inrush fuses are not permitted at your site because of national or local codes, use a motor-start circuit breaker or equivalent.

## Main power cord requirements

As an installer or user, you must supply the main power cord for your cutting system.

Refer to Table 7 on page 45 for recommended main power cord size.

The recommended main power cord sizes are based on Table 310.16 of the *U.S. National Electric Code (2023 Handbook)*. Table 7 on page 45 shows stranded-flexible cord rates for 90°C (194°F). The size requirement for the main power cord at your site can change because of the following conditions:

- Wires with lower temperature ratings
- Wires with different insulation types
- Different distances between the line-disconnect switch or receptacle and the plasma power supply
- Local codes and regulations

The strain-relief size for the main power cord that comes with a 380 V to 600 V plasma power supply is correct. If you have a plasma power supply with a 200 V to 240 V configuration, you must supply the strain relief for the main power cord. A licensed electrician can recommend the correct size.

Always follow the national and local electrical safety requirements for your location, including requirements for correct electrical system design and installation and main power cord size and length. Speak with a licensed electrician for more information about the codes in your location.

## Input power requirements for CE units

CE cutting systems have special input power requirements.

This plasma cutting system is intended for use only in sites that have a service-current capacity that is greater than (or equal to) 200 A per phase and supplied from a distribution network that has a nominal voltage of 400/230 V. The installer or user is responsible for verifying that the service current capacity for the installation site obeys this requirement.

## Remote on-off switch requirements

You must supply the remote on-off switch, or switches, for your cutting system.

**WARNING**

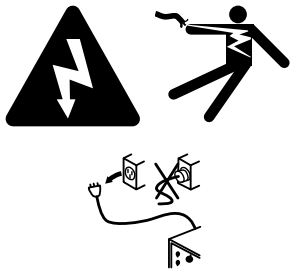

**ELECTRIC SHOCK CAN KILL**

The plasma power supply contains dangerous electric voltages that can seriously injure or kill you. Even if the plasma power supply is turned OFF, you can still get a serious electric shock if the plasma power supply remains connected to an electric power source.

Use extreme caution if you do diagnosis or maintenance tasks when the plasma power supply remains connected to an electric power source and the outer cover or panels are removed. All work that requires removal of the plasma power supply outer cover or panels must be done by a qualified technician. Refer to the *Safety and Compliance Manual (80669C)* for more safety information.

A remote on-off switch lets you supply electric power to or remove electric power from the gas connect console, TorchConnect console, and some parts of the plasma power supply from a location that is remote from the main power source. A convenient location for a remote on-off switch is near the CNC. As an user or installer, you must supply the remote on-off switch, or switches, for your cutting system.

For information about how to do this, refer to Install a remote on-off switch on page 201.

A feature of the control PCB is that it offers redundancy to one remote on-off switch. When the redundant remote on-off feature is selected, signals from two remote on-off switches are necessary for the plasma power supply to work.

A 24 VDC (500 mA) and return (GND) from the CNC or controlling device to the expansion PCB are necessary for redundant remote on-off for the expansion PCB and input to the control PCB. Make sure to use a separate cable between the redundant remote on-off input and main control PCB.

For information about how to do this, refer to Install a redundant remote on-off switch on page 207.

When at least one remote on-off switch is set to OFF (disabled), electric power remains ON (active) to the following parts:

- Power-indicator LED on the front of the plasma power supply
- Control PCB
- Control transformer (can be different on input and output)
- Input to the relay that controls the 48 V power supply
- 24 V power supply
- 120 V to the input side of the contactor or contactors
- 120 VAC
- 220 VAC on the power distribution PCB
- 120 VAC to the input side of the 40 V power relay
- 220 VAC to the input side of the cooler power relay

# Process-gas requirements for all gas connect consoles

You must supply the process gases for your cutting system.

Process-gas requirements include the following:

- Nitrogen is required for all processes.
- Air is required for $H_2$ mix processes.
- Water can be used as a shield fluid for plasma power supplies that have a VWI or OptiMix gas connect console. Refer to Shield-water requirements (VWI and OptiMix) on page 55 for the specifications and requirements for water that is used for shield purposes.

**Table 8 -** Gas quality, pressure, and flow requirements

| Gas | Quality | System inlet pressure (during gas flow [1]) | Flow rate |
|---|---|---|---|
| $O_2$ (oxygen) | 99.5% pure, clean, dry, oil-free | Core, CorePlus, VWI: 7.5 bar ± 0.4 (110 psi ± 5)<br>OptiMix: 7.9 bar ± 0.4 (115 psi ± 5) | 104 slpm (220 scfh) |
| $N_2$ (nitrogen) | 99.99% pure, clean, dry, oil-free | Core, CorePlus, VWI: 7.5 bar ± 0.4 (110 psi ± 5)<br>OptiMix: 8.3 bar ± 0.4 (120 psi ± 5) | 181 slpm (380 scfh) |
| Air [2] | Clean, dry, oil free consistent with 8573-1:2010 Class 1.4.2 | Core, CorePlus, VWI: 7.5 bar ± 0.4 (110 psi ± 5)<br>OptiMix: 7.9 bar ± 0.4 (115 psi ± 5) | 128 slpm (270 scfh) |
| $H_2$ (hydrogen) | 99.995% pure | OptiMix: 8.3 bar ± 0.4 (120 psi ± 5) | 50 slpm (105 scfh) |
| Ar (argon) | 99.99% pure; clean, dry, oil-free | CorePlus, VWI: 7.5 bar ± 0.4 (110 psi ± 5)<br>OptiMix: 8.3 bar ± 0.4 (120 psi ± 5) | 181 slpm (380 schf) [3] |
| F5 (95% nitrogen, 5% hydrogen) | 99.98% pure | VWI: 7.5 bar ± 0.4 (110 psi ± 5)<br>OptiMix: 7.9 bar ± 0.4 (115 psi ± 5) | 40 slpm (85 scfh) |

1 When there is **no** gas flow, make sure that the pressure at the gas inlet connection is less than 8.6 bar (125 psi) to prevent system alerts.

2 Air compressors must remove oil before they supply air to the cutting system.

3 Flow rate during argon marking and argon assist and during stainless steel cutting with an OptiMix gas connect console.

**Table 9 -** Air compressor requirements

**Hypertherm recommends that air compressors supply air that complies with the requirements of ISO Standard 8573-1:2010 Class 1.4.2.**

| | |
|---|---|
| Maximum particle count in 1.0 $m^3$: | ▪ 20,000 at 0.1 microns - 0.5 microns<br>▪ 400 at 0.5 microns - 1.0 microns<br>▪ 10 at 1.0 microns - 5.0 microns |
| Maximum water vapor pressure dew point: | 3°C (37°F) |
| Maximum oil concentration: | 0.1 $mg/m^3$ (for aerosol, liquid, and vapor) |

**Table 9 -** Air compressor requirements (continued)

Speak to your air compressor manufacturer if you operate the cutting system in temperatures colder than 3°C (37°F) or if you are not sure that the air compressor complies with the ISO standard for air quality.

***NOTICE***

**RUST IN GAS CYLINDERS CAN GET INTO THE GAS LINE**

Rust can collect at the bottom of gas cylinders. If the rust mixes with the gas, it can get into the gas line and decrease cut quality and performance.

When you move gas cylinders, make sure that you do not put them on their side, roll, or shake them.

## Plumbing requirements for supply gases

**WARNING**

**OXYGEN GAS CAN CAUSE A FIRE HAZARD**

If you use oxygen as the plasma gas for cutting, it can cause a potential fire hazard due to the oxygen-enriched atmosphere that collects. A fire can occur if oxygen is not removed.

Hypertherm recommends that you install an exhaust ventilation system to remove the oxygen-enriched atmosphere that can collect when oxygen is used as the plasma gas for cutting.

Flashback arrestors are REQUIRED to stop the spread of fire to the supply gases (unless a flashback arrestor is not available for a specific gas or pressure).

As an installer or user, you must supply the exhaust ventilation and flashback arrestors for your cutting system. You can get them from your cutting machine supplier.

## WARNING

**HYDROGEN GAS CAN CAUSE AN EXPLOSION OR FIRE**

Hydrogen is a flammable gas that can cause an explosion or fire if it is not removed.

Keep flames away from cylinders and hoses that contain hydrogen. Keep flames and sparks away from the torch when using hydrogen as a plasma gas.

Consult your local safety, fire, and building code requirements for the storage and use of hydrogen.

Hypertherm recommends that you install an exhaust ventilation system to remove the hydrogen-enriched atmosphere that can collect when hydrogen is used as the plasma gas for cutting.

Flashback arrestors are REQUIRED to stop the spread of fire to the supply gases (unless a flashback arrestor is not available for a specific gas or pressure).

As an installer or user, you must supply the exhaust ventilation and flashback arrestors for your cutting system. You can get them from your cutting machine supplier.

- Make sure to obey all applicable codes and regulations for supply gas plumbing:
  - All installer or user-supplied equipment must obey applicable national and local codes for supply gases and supply gas plumbing. Speak with a licensed plumber for more information about the codes in your location.
  - Any installation, modification, or repair of supply-gas equipment or plumbing systems must be done by a licensed plumber.
- You can use flexible hoses that are designed to carry the appropriate gas and are rated for the correct pressure. Other hoses can crack and leak.
- For the best results, use the recommended torque specifications for plumbing and hose fittings in the Torque specifications for gas or water plumbing and hose connections on page 57.
- You can use rigid copper pipes.
- Do not use steel or aluminum.

Supply-gas hoses are available from Hypertherm. Refer to Cable, hose, and lead parts on page 423. All installer or user-supplied equipment must obey applicable national and local codes for supply gas and supply gas plumbing. Speak with a licensed plumber for more information about the codes in your location.

Hypertherm recommends an internal diameter of at least 10 mm (0.375 inch) for supply-gas hoses that are 76 m (250 feet) or less.

**Table 10 -** Recommended dimensions for gas fittings

| Fitting type | Dimensions |
|---|---|
| $N_2$ / Ar | 5/8 inch – 18, RH internal (inert gas) "B" |
| Air | 9/16 inch – 18, JIC #6 |
| F5 / $H_2$ | 9/16 inch – 18, LH (fuel gas) "B" |
| $O_2$ | 9/16 inch – 18, RH (oxygen) |

The location of regulators and the number of elbow fittings can have an effect on inlet pressure. If the inlet pressure for your cutting system is not within recommended specifications, speak with your cutting machine supplier or regional Hypertherm Technical Service team.

## NOTICE

**PTFE TAPE CAN CAUSE CLOGGED VALVES, REGULATORS, AND TORCHES**

Never use PTFE tape on any joint preparation. Use only a liquid or paste thread sealant on male thread ends.

## NOTICE

**INCORRECT SUPPLY-GAS CONNECTIONS CAN CAUSE CUTTING SYSTEM DAMAGE**

Incorrect connections can reduce the life of consumables and cause damage to the torch head, torch receptacle, torch leads, and torch connect console.

NEVER connect a supply gas to a hose, connection, or fitting that is not designed for that gas type or pressure.

## NOTICE

**INCORRECT HOSES, CONNECTIONS, OR FITTINGS CAN CAUSE DAMAGE AND BAD PERFORMANCE**

Noncompliant hoses, hose connections, or hose fittings can crack or leak. Incorrect fittings can cause malfunctions with the internal valves because contaminants can enter the valves through damaged or loose fittings.

All hoses, hose connections, and hose fittings used for supply-gas plumbing must be designed for use with the appropriate gas and pressure rating. NEVER connect a supply gas to a hose, connection, or fitting that is not designed for that gas type or pressure. A replacement hose, connection, or fitting must meet all applicable regulations and codes.

## NOTICE

**DIRTY, OILY AIR CAN CAUSE DAMAGE TO THE AIR FILTER BOWL**

Some air compressors use synthetic lubricants that contain esters. Esters can damage the polycarbonates in the air filter bowl.

Add additional gas filtration if necessary.

# Regulator requirements for supply gases

## NOTICE

**LOW-QUALITY REGULATORS CAN REDUCE PERFORMANCE AND CUT QUALITY**

Low-quality gas regulators do not provide consistent supply-gas pressure. They can reduce system performance and decrease cut quality.

Do not use low-quality gas regulators.

## NOTICE

**DIRTY, OILY AIR CAN CAUSE DAMAGE TO THE AIR FILTER BOWL**

Some air compressors use synthetic lubricants that contain esters. Esters can damage the polycarbonates in the air filter bowl.

Add additional gas filtration if necessary.

It is important to choose the correct gas regulator, or regulators, for the conditions at the installation site. A gas regulator must be compatible with the gases used and appropriate for the environmental conditions. For example, certain regulators are recommended for specific temperature ranges. The type of gas (cylinder gas, line gas, or liquefied gas), and the gas-delivery pressure and flow, can also influence regulator selection.

Single-stage gas regulation:

- Reduces source gas pressure to the necessary delivery pressure in one step.
- Is not subject to tightly controlled delivery pressure.
- Is a good choice for generic applications and where fluctuations in source gas pressure are small.

Dual-stage gas regulations:

- Reduce source gas pressure to the necessary delivery pressure in two steps. Dual-stage regulation uses two single-stage regulators. The first regulator reduces the pressure to approximately three times the maximum delivery pressure. The second regulator reduces pressure to the necessary delivery pressure.
- Are a good choice for applications that require consistent delivery pressure and where fluctuations in source gas pressure are large.

Your gas supplier can recommend the best gas regulator, or regulators, for the conditions at your site.

Local regulations and the type of gas that is used can influence the recommended inlet gas fittings for your gas connect console. Refer to the following table.

**Table 11 -** Recommended dimensions for gas fittings

| Fitting type | Dimensions |
|---|---|
| $N_2$ / Ar | 5/8 inch – 18, RH internal (inert gas) "B" |
| Air | 9/16 inch – 18, JIC #6 |
| F5 / $H_2$ | 9/16 inch – 18, LH (fuel gas) "B" |
| $O_2$ | 9/16 inch – 18, RH (oxygen) |

# Shield-water requirements (VWI and OptiMix)

If you use water as a shield fluid, use the following water pressure requirements, flow requirements, and water-purity guidelines.

If you use water as a shield fluid, the temperature range for cutting system operation and storage decreases to 0°C to 40°C (32°F to 104°F).

**Table 12 -** Quality, pressure, and flow requirements for shield water

| Quality [1] | Minimum and maximum pressure | Flow rate required |
|---|---|---|
| Deionized water is **not** recommended to use as shield water.<br>Deionized water will react with the copper components in the system and result in decreased life of components and consumables.<br>Hypertherm recommends that you contact a water-quality expert for guidance. | 2.76 bar (40 psi) minimum<br>8.27 bar (120 psi) maximum | 35 L/h (9.4 U.S. gal/h) |

1 Water that does not meet minimum purity specifications can cause excessive deposits on the torch nozzle and shield. These deposits can alter the water flow and produce an unstable arc.

**Table 13 -** Purity requirements for shield water

| Particulate type | Purity requirement |
|---|---|
| Total Dissolved Solids (TDS) | < 61 PPM |
| Calcium + magnesium | < 40 PPM |
| Silica | < 5 PPM |
| pH | 6.5 - 8.0 |

A TDS meter identifies the concentration of dissolved ionized solids (such as salts and minerals) and their increase in electrical conductivity

of a solution. A TDS meter is available from Hypertherm (Hypertherm Waterjet part number 1-13897).

## Plumbing and hose requirements for shield water

- You can use flexible hoses that are designed to carry water.
- For the best results, use the recommended torque specifications for plumbing and hose fittings.
- You can use rigid copper pipes.
- Do not use steel or aluminum pipes.

Install the plumbing and hoses consistent with all national and local codes. After installation, pressurize the entire system and test it for leaks.

To decrease the risk of leaks in the cutting system, make sure to tighten all connections to the recommended torque specifications in Torque specifications for gas or water plumbing and hose connections on page 57.

Hoses are available from Hypertherm. Refer to Water (optional shield fluid) hoses (blue) on page 434.

## Additional regulator requirement for shield water when pressure is high

Water pressure regulators are built into the VWI and OptiMix gas connect consoles.

Additional water pressure regulators are necessary only when the shield-water pressure is more than 7.92 bar (115 psi).

## Remove shield water from the gas connect console

If your plasma cutting system uses shield water and is stored in ambient temperatures at or below 0°C (32°F), Hypertherm recommends that you use these steps to remove shield water. These steps are for cutting systems that have a VWI or OptiMix gas connect consoles.

1. Remove the shield water supply line to the gas connect console.
2. Access a source of compressed air that is clean and dry.
3. Use a regulator to adjust the compressed air to 5.52 bar (80 psi).
4. Connect the compressed air hose to the water inlet on the gas connect console.

The air hose needs to adapt to a JIC 6 male fitting on the gas connect console.

5. Use the XPR web interface or CNC to select a process ID for a water process (such as 2028).
6. Select **Preflow** from the **Plasma Process Selection** menu.

   During preflow, water mist will exit the torch nozzle for approximately 45 - 50 seconds.

7. Repeat the previous step until shield water mist is no longer visible exiting the torch nozzle.

   It can take 7 - 10 preflow cycles for the shield water mist to stop.

# Torque specifications for gas or water plumbing and hose connections

For the best results, use the recommended torque specifications for plumbing and hose fittings.

**Table 14 -** Torque specifications

| | Gas or water hose dimensions | N·m | lbf·in | lbf·ft |
|---|---|---|---|---|
| | 10 mm (3/8 inch) or less | 8.5 – 9.5 | 75 – 84 | 6.25 – 7 |
| | 12 mm (1/2 inch) | 16.3 – 19.0 | 144 – 168 | 12 – 14 |
| | 25 mm (1 inch) | 54.2 – 88.1 | 480 – 780 | 40 – 65 |

# Coolant requirements

Add the correct type and amount of coolant before you operate the plasma cutting system.

The cutting system ships **without** coolant in the reservoir. Before you operate the cutting system, you must fill it with coolant. The capacity of the coolant system is between 22.7 liters – 45 liters (6 U.S. gallons – 12 U.S. gallons). The coolant capacity for the total coolant system is 22.7 liters – 45 liters (6 U.S. gallons – 12 U.S. gallons). The capacity of the coolant reservoir is 15.14 liters (4 U.S. gallons).

Lead length has an effect on the total coolant volume needed. A cutting system with long leads needs more coolant than a cutting system with short leads.

Before you fill the coolant reservoir, choose the best coolant for your operating conditions. The ambient temperature range where your cutting system operates affects the coolant that you choose.

## NOTICE

**LOW COOLANT LEVELS CAN DAMAGE THE CUTTING SYSTEM AND COOLANT PUMP**

There is a risk of serious damage to the cutting system and to the coolant pump if you operate the cutting system with no coolant or with low coolant. If your coolant pump is damaged, pump replacement can be necessary.

Never operate the cutting system if you get a low coolant level notice.

## NOTICE

**AUTOMOTIVE ANTIFREEZE CAN DAMAGE THE TORCH COOLANT SYSTEM**

Antifreeze contains chemicals that can damage the torch coolant system.

Never use automotive antifreeze in place of Hypertherm coolant.

Make sure to read and follow the warning and cautions below. Refer to the Safety Data Sheets (SDS) for safety data and information about how to handle and store coolant, propylene glycol, and benzotriazole. You can find the SDS online. Technical documentation is available at www.hypertherm.com/docs.

## ⚠ WARNING

**COOLANT CAN BE IRRITATING TO SKIN AND EYES AND HARMFUL OR FATAL IF SWALLOWED**

Propylene glycol and benzotriazole are irritating to skin and eyes, and harmful or fatal if swallowed.

When you come into contact, flush skin or eyes with water. If swallowed, seek immediate medical attention.

# Coolant requirements for operation between -10°C – 40°C (14°F – 104°F)

Use the Hypertherm premixed coolant for the usual operating temperature range for plasma cutting systems. Adjust the coolant mix to operate the system at temperatures that are colder than -10°C (14°F).

Use Hypertherm premixed coolant (028872) when operating in a temperature range of -10°C – 40°C (14°F – 104°F).

If you use shield water, the temperature range for cutting system operation and storage is reduced to 0°C – 40°C (32°F – 104°F).

If it is possible for the temperature to go below -10°C (14°F) when the cutting system is not in use, adjust coolant propylene glycol concentration to 50% to prevent damage to cooling system components.

Operating your plasma cutting system below -10°C (14°F) is not recommended due to reduced consumable life and performance.

To increase the coolant propylene glycol percentage, add 100% propylene glycol (028873) to the premixed Hypertherm coolant (028872) according to the following calculation. The maximum percentage of propylene glycol should never exceed 50%. Also refer to Calculations for total coolant volume estimates on page 263.

**Table 15 -** Calculate the correct quantity of propylene glycol

| | | | | |
|---|---|---|---|---|
| Total system coolant volume (in liters) | X | 0.4 | = | Total volume in liters of 100% propylene glycol to add |
| Total system coolant volume (in U.S. gallons) | X | 0.4 | = | Total volume in U.S. gallons of 100% propylene glycol to add |

## Coolant requirements for operation in temperatures above 40°C (104°F)

Use the correct treated water mixture as coolant when you operate the cutting system at temperatures that stay higher than 40°C (104°F).

For operating temperatures more than 40°C (104°F) and that can never go at or below 0°C (32°F) use treated water with no propylene glycol as coolant.

For operation in very warm temperatures, treated water provides the best cooling properties.

Treated water is a mixture of purified water that meets the Purity requirements for coolant water on page 60 and 1 part benzotriazole (128020) to 300 parts of water. Benzotriazole acts as a corrosion inhibitor for the copper components inside of the cutting system.

## Flow requirements for coolant

The correct coolant flow rate is necessary for cutting system operation. If the flow rate is too low or too high, the system will stop automatically to prevent damage.

- The maximum coolant flow rate is 11.36 liters per minute (3.0 US gallons per minute).
- The minimum coolant flow rate is calculated based on coolant temperature. As coolant temperature increases, the minimum flow rate also increases. It ranges from 2.50 liters per minute (0.7 US gallons per minute) to 4.92 liters per minute (1.3 US gallons per minute).

The cutting system stops automatically if the flow rate reaches the maximum or minimum flow rate. Automatic, low-flow shut-off protects the coolant pump from damage from low-flow or no-flow conditions. Automatic, high-flow shut-off protects the torch and leads from damage from a blow-out event.

For information about how to diagnose and troubleshoot coolant flow issues, refer to:

- Troubleshooting for low coolant flow on page 326
- Troubleshooting for high coolant flow on page 328

## Purity requirements for coolant water

Always use water that meets the specifications in the following table when using a custom coolant mix.

Water that is too pure can also cause problems. Deionized water can cause corrosion in the coolant system. After deionization, add benzotriazole (128020).

Use water purified by any method, such as deionization, reverse osmosis, sand filters, or water softeners, as long as the water purity meets the specifications in the following table. Speak with a water specialist for advice in choosing a water filtration system.

**Table 16 -** Purity measurement methods for coolant water

| Water purity level | Conductivity µS/cm at 25°C (77°F) | Resistivity mΩ·cm at 25°C (77°F) | Dissolved solids or hardness (ppm of NaCl) | Grains per gallon (gpg of $CaCO_2$) |
|---|---|---|---|---|
| Pure water<br>(For reference only. Do not use.) | 0.055 | 18.3 | 0 | 0 |
| Maximum purity | 0.5 | 2 | 0.206 | 0.010 |
| Minimum purity | 18 | 0.054 | 8.5 | 0.43 |
| Maximum potable water (For reference only. Do not use.) | 1,000 | 0.001 | 495 | 25 |

# Requirements to put system components in position

When planning where to put the plasma power supply, gas connect console, TorchConnect console, cooler, and torch, consider the following limitations and requirements:


- Worksite requirements for system components on page 65
- Length requirements for hoses, cables, and leads on page 66
- Bend-radius requirements for hoses, cables, and leads on page 66
- Distance requirements between high-frequency cables and control cables on page 68
- Distance requirements for ventilation and access on page 68
- Distance requirements for communications on page 69


## Configuration with the Core gas connect console

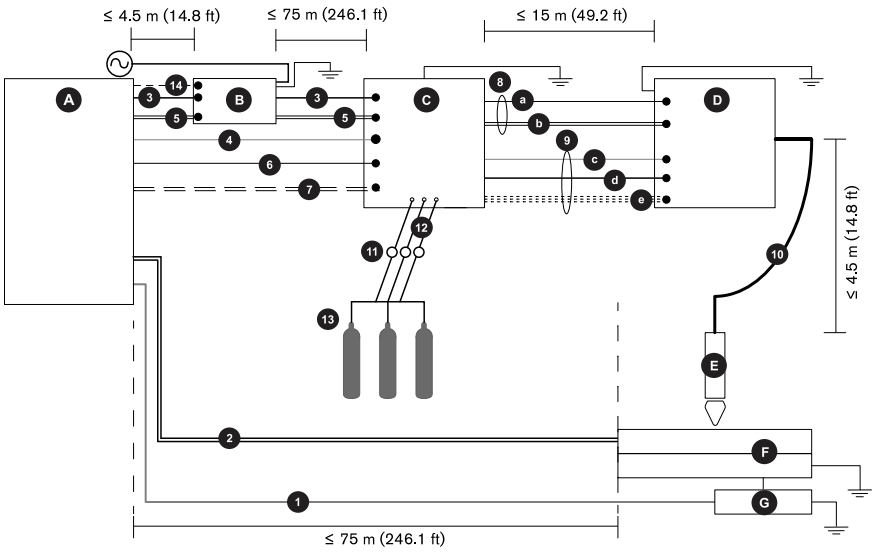


**A** Plasma power supply

**B** Cooler

**C** Gas connect console (Core)

**D** TorchConnect console

**E** Torch

**F** Cutting table

**G** CNC

**1** CNC lead

**2** Work cables

**3** Controller Area Network (CAN) cable

**4** Power cable: 120 VAC

**5** Coolant hoses: 1 supply, 1 return

**6** Pilot-arc cable

**7** Negative cables

**8** Pilot-arc cable and coolant-hose assembly

**8a** Pilot-arc cable

**8b** Coolant hoses: 1 supply, 1 return

**9** Power cable, CAN, 3-gas hose assembly

**9c** Power cable: 120 VAC

**9d** CAN cable

**9e** 3 gas hoses (Core)

**10** Torch lead

**11** Regulators – Position a gas regulator within 3 meters (10 feet) of the gas connect console or adjust inlet gas pressures to tolerances specified in the process gas requirements.

**12** Hoses for supply gases

**13** Gases Core: $O_2$, $N_2$, and air

**14** Power cable: 220 VAC

# Configuration with the CorePlus gas connect console

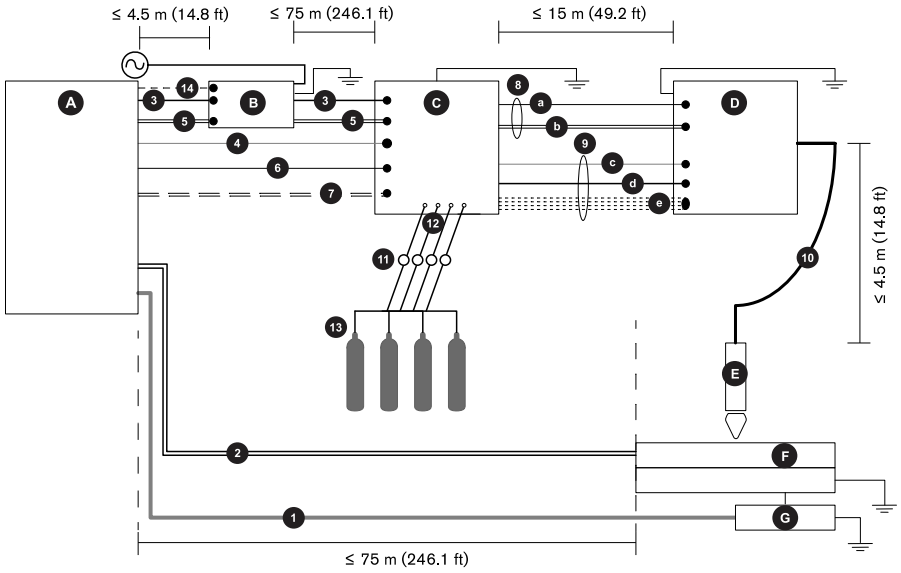


**A** Plasma power supply

**B** Cooler

**C** Gas connect console (CorePlus)

**D** TorchConnect console

**E** Torch

**F** Cutting table

**G** CNC

**1** CNC lead

**2** Work cables

**3** CAN cable

**4** Power cable: 120 VAC

**5** Coolant hoses: 1 supply, 1 return

**6** Pilot-arc cable

**7** Negative cables

**8** Pilot-arc cable and coolant-hose assembly

**8a** Pilot-arc cable

**8b** Coolant hoses: 1 supply, 1 return

**9** Power cable, CAN, 4-gas hose assembly

**9c** Power cable: 120 VAC

**9d** CAN cable

**9e** 4 gas hoses (CorePlus)

**10** Torch lead

**11** Regulators – Position a gas regulator within 3 meters (10 feet) of the gas connect console or adjust inlet gas pressures to tolerances specified in the process gas requirements.

**12** Hoses for supply gases

**13** Gases CorePlus: $O_2$, $N_2$, Ar, and air

**14** Power cable: 220 VAC

# Configuration with VWI or OptiMix gas consoles

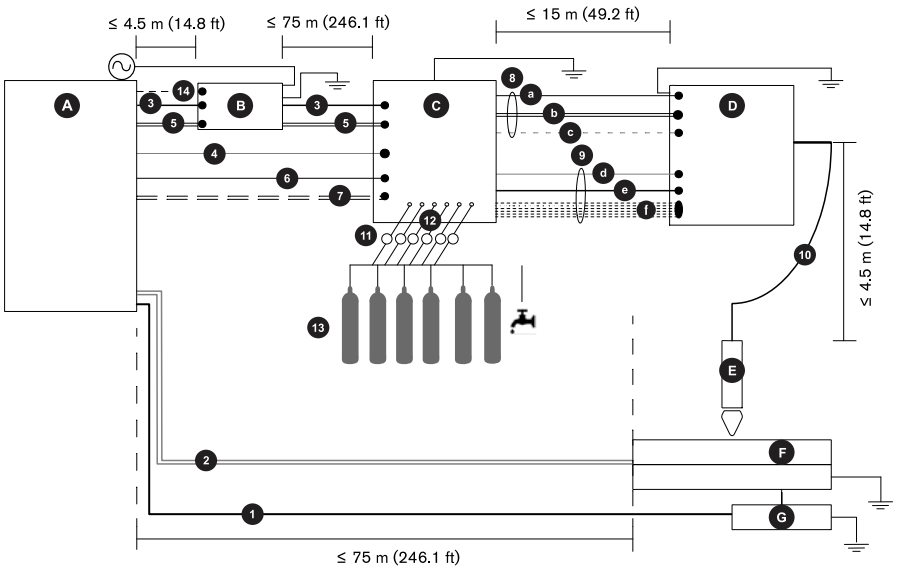


**A** Plasma power supply

**B** Cooler

**C** Gas connect console (VWI or OptiMix)

**D** TorchConnect console

**E** Torch

**F** Cutting table

**G** CNC

**1** CNC lead

**2** Work cables

**3** CAN cable

**4** Power cable: 120 VAC

**5** Coolant hoses: 1 supply, 1 return

**6** Pilot-arc cable

**7** Negative cables

**8** Pilot-arc, coolant-hose, and shield-water assembly

**8a** Pilot-arc cables

**8b** Coolant hoses: 1 supply, 1 return

**8c** Shield-water hose (VWI or OptiMix)

**9** Power, CAN, 5-gas hose assembly

**9d** Power cable: 120 VAC

**9e** CAN cable

**9f** 5 gas hoses (VWI or OptiMix)

**10** Torch lead

**11** Regulators – Position a gas regulator within 3 meters (10 feet) of the gas connect console or adjust inlet gas pressures to tolerances specified in the process gas requirements.

**12** Hoses for supply gases

**13** Gases and water

VWI: $O_2$, air, $N_2$, Ar, F5, and water

OptiMix: $O_2$, air, $N_2$, Ar, F5, water, $H_2$

**14** Power cable: 220 VAC

## Worksite requirements for system components

Use the following recommendations to put the plasma power supply in the best position:

- Level surface (less than 10° incline)
- Clean and dry area
- Able to support at least 782.4 kg (1,725 lb)
- With a minimum distance of 1 meter (3.3 feet) between the plasma power supply and other system components, or between the plasma power supply and an obstacle.

Use the following recommendations to put the cooler in the best position:

- Level surface (less than 10° incline)
- Clean and dry area
- Able to support at least 90.72 kg (200 lb)
- With a minimum distance of 1 meter (3.3 feet) between the cooler and other system components, or between the cooler and an obstacle.

Use the following recommendations to put the gas connect console in the best position:

- Level surface (less than 10° incline)
- Clean and dry area
- Able to support the weight of your gas connect console. Refer to Gas connect console specifications on page 33.

Use the following recommendations to put the TorchConnect console in the best position:

- Clean and dry area
- Able to support at least 9.3 kg (20.5 lb)

These recommendations for the gas connect console and the TorchConnect console are also applicable for mezzanine locations.

## Length requirements for hoses, cables, and leads

Use the correct lengths for all hoses, cables, and leads.

The distances between the plasma power supply, gas connect console, TorchConnect console, torch, cooler, and cutting table are limited by the lengths of the interconnect hoses, cables, and leads that connect them.

**Table 17 -** Length ranges for interconnect hoses, cables, and leads

| From this component... | to this component... | ...the length can range from: |
|---|---|---|
| Plasma power supply | Cooler | 3 m (9.8 ft) – 4.5 m (15 ft) |
| Cooler | Gas connect console (all types) | 3 m (9.8 ft) – 75 m (246.1 ft) |
| Gas connect console | TorchConnect console | 3 m (9.8 ft) – 15 m (49.2 ft) |
| TorchConnect console | Torch or cutting table | 2 m (6.6 ft) – 4.5 m (14.8 ft) |

For visual distance requirements, refer to:

- Configuration with the Core gas connect console on page 61
- Configuration with the CorePlus gas connect console on page 62
- Configuration with VWI or OptiMix gas consoles on page 63

Hoses, cables, and leads for plasma equipment are available from Hypertherm. Make sure to install hoses, cables, and leads that are the correct length:

- Hoses, cables, or leads that are too short can cause restriction of mechanical movement.
- Cables and leads that are too long can cause Electromagnetic Interference (EMI).

EMI can have a bad effect on cut quality.

Speak with your cutting machine supplier for recommendations about the best hose, cable, and lead lengths for your cutting system.

## Bend-radius requirements for hoses, cables, and leads

Do not bend hoses, cables, and leads more than the minimum bend radius for each component.

The following hoses, cables, and leads cannot bend beyond a minimum bend radius of 152.50 mm (6 in.):

- Torch lead
- pilot-arc cables
- Coolant-hose assemblies
- Power cables

- CAN cables
- 3-gas hose assembly for the Core gas connect console
- 4-gas hose assembly for the CorePlus gas connect console
- 5-gas hose assembly for the VWI or OptiMix gas connect console
- Gas supply hoses
- Bevel torch lead
- Negative cables

**Figure 6 -** Minimum bend radius (measured inside diameter)

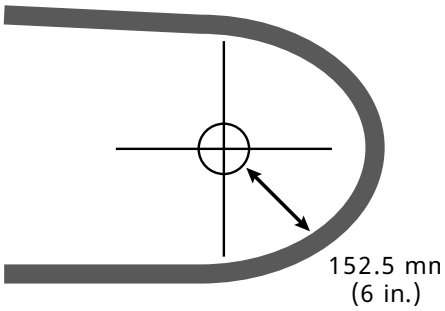


## Correct sizes for connectors on hoses, cables, and leads

Make sure to use connectors that are the correct size on hoses, cables, and leads that connect from one console to another.

The connectors for the console-to-console lead and hose assemblies have the following maximum diameters:

- 56 mm (2.2 in.) for the pilot-arc cable and coolant-hose assembly
- 58 mm (2.3 in.) for the power cable, CAN cable, and gas-hose assembly

The following images show OptiMix assemblies as examples. The connectors on all console-to-console assemblies (Core, CorePlus, VWI, and OptiMix) have the same diameter.

**Figure 7 -** Example OptiMix pilot-arc cable and coolant-hose assembly

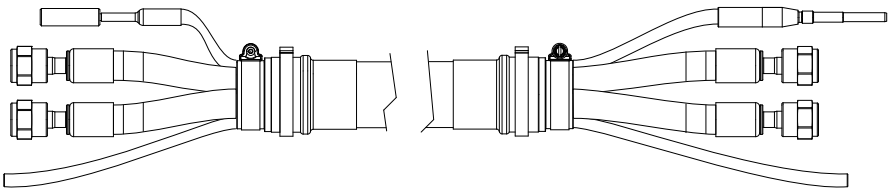

**Figure 8 -** Example OptiMix gas-hose assembly

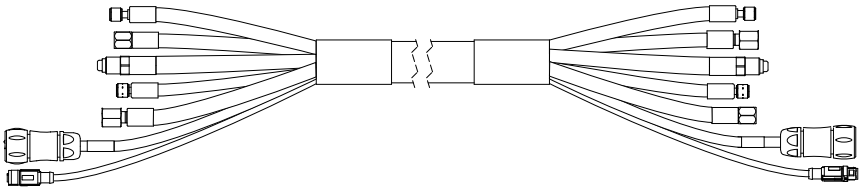

## Distance requirements between high-frequency cables and control cables

To prevent noise issues, do not put high-frequency cables and control cables too near each other.

EMI can occur if high-frequency cables (such as the pilot-arc and negative cables) are too close to control cables (such as the 120 VAC power, CAN, and EtherCAT cables).

If possible, use a separate track to isolate each cable.

If separate tracks are not possible, Hypertherm recommends a minimum separation distance 150 mm (6 inches) between the high-frequency cables and control cables. Separate the pilot-arc and negative cables, or any power cables that have a voltage more than 120 VAC from the following:

- CAN cables
- Power cables (120 VAC and 220 VAC)
- CNC lead (EtherCAT, serial RS-422, or discrete lead)

## Distance requirements for ventilation and access

Make sure that all system components have sufficient open space around them for ventilation and service access.

### Requirements for ventilation

- Do not cause blockages near ventilation louvers on the corners or bottom panels of the front and rear of the plasma power supply. A separation distance of least 1 m (3.3 feet) is required for ventilation.
- Do not cause blockages near the fan inlet grates on the front of the cooler or the rear ventilation louvers on the rear of the cooler. A separation distance of least 1 m (3.3 feet) is required for ventilation.
- Do not cause blockages near the ventilation louvers on the gas connect console. A separation distance of least 1.27 cm (0.50 inch) is required for ventilation.
- Do not cause blockages near the ventilation louvers on the TorchConnect console. You must use the mounting brackets to allow space between the console and mounting surface.

### Requirements for service and maintenance access

Hypertherm recommends a minimum distance of 1 meter (3.3 feet) between the plasma power supply, the cooler, and other system components, or between the plasma power supply, the cooler, and an obstacle.

## Distance requirements for communications

Make sure that you keep the plasma power supply no more than a specified maximum distance from each controlling communication device.

**Table 18 -** Maximum distance between the plasma power supply and controller

| Communication type | Distance |
|---|---|
| Wireless | Unobstructed maximum radius of 30.5 m (100 ft) [1] |
| EtherCAT [2] | Maximum 75 m (246.1 ft) |
| Discrete [2] | Maximum 75 m (246.1 ft) |
| Serial RS-422 [2] | Maximum 75 m (246.1 ft) |

1 Obstructions or distances greater than 30.5 meters (100 feet) can have an effect on communication between the plasma power supply and wireless device.

2 Refer to Configuration with the Core gas connect console on page 61, Configuration with the CorePlus gas connect console on page 62, and Configuration with VWI or OptiMix gas consoles on page 63 for visual distance requirements.

## Wireless compliance

The plasma cutting system has integrated wireless devices that have certification for use in specified countries.

Wireless devices use radio frequencies that may be regulated, but regulations differ from country to country. Wireless devices that conform to IEEE standards 802.11a, 802.11b, 802.11g, 802.11n, 802.16e, and others, are designed for, or certified for use in, specific countries. Certificates of Radio Frequency (RF) Compliance from wireless device manufacturers for wireless devices integrated into Hypertherm products can be found at www.hypertherm.com/docs.

The user of Hypertherm products that have integrated wireless devices is responsible for making sure that each wireless device has been certified for the country of use and configured with the correct selection of frequency and channel for the country of use. Wireless devices that are integrated into Hypertherm products are not allowed to be operated in countries where regulations for wireless device certification have not been satisfied. Any wireless device or antennae modification or deviation from the permissible configuration, markings, power, frequency settings, and other local regulations on radio frequency wireless device for the country of use can be an infringement of national law.

Refer to the *XPR Wireless Compliance Manual (80992C)* for more information.

# Torch mounting bracket requirements

Make sure to use a torch mounting bracket that obeys the requirements for XPR torches.

You must supply the torch mounting bracket for your cutting system. Choose one that does the following:

- Holds a torch diameter that is 57.15 mm (2.25 inches)
- Holds the torch perpendicular (at a 90° angle) to the workpiece (for non-bevel cutting)
- Does not interfere with the torch lifter

The XPR torch mounting sleeve is larger than the torch mounting sleeve for HPR® torches. Modification or replacement of previous mounting hardware is necessary for XPR torches.

Mounting brackets are available from Hypertherm. Refer to Torch bracket on page 419.

# Torch lifter requirements

Use a torch lifter that has the correct weight capacity for XPR torches.

Choose a lifter that has a weight capacity of at least 11.3 kg (25 lb). This includes the weight of a torch rotational sleeve, if used. Refer to your torch lifter instruction manual for more information.

# CNC requirements for plasma cutting systems

There are specific CNC features that are necessary for integration with plasma cutting systems.

## Remote on-off switch

The CNC must have a remote on-off switch. Refer to Install a remote on-off switch on page 201.

A feature of the control PCB is that it offers redundancy to one remote on-off switch.

A 24 VDC (500mA) and return (GND) from the CNC or controlling device to the expansion PCB are necessary for redundant remote on-off for the expansion PCB and input to the control PCB. Make sure to use a separate discrete cable between the redundant remote on-off input and main control PCB.

For information about how to do this, refer to Install a redundant remote on-off switch on page 207.

## Adjustable settings

The CNC must allow the adjustment of the following settings:

- Current setpoint
- Plasma cutflow
- Shield cutflow
- Gas mixing setpoints

## Display settings

The CNC must show the following data:

- Plasma-gas type
- Shield-gas type
- Process-ID selection
- System-diagnostic codes
- Firmware version based on console type

The CNC must show the following data in real time to troubleshoot and diagnose system operation:

- Chopper current
- Work-cable current
- System-status codes
- Chopper temperature
- Transformer temperature
- Coolant temperature
- Coolant flow
- Process-gas pressures
- Fan speeds

## Diagnostics and troubleshooting

The CNC must be able to run the following commands to diagnose and troubleshoot system operation:

- Test preflow gases
- Test pierceflow gases
- Test cutflow gases
- Test for gas system leaks

For more information about CNC commands, refer to the *CNC Communication Protocol for the XPR Cutting System (809810)*.

# Recommended grounding and shielding

It is important to use grounding and shielding best practices when you set up a plasma cutting system. This can minimize problems related to EMI, or electrical noise.

This documentation describes practices for grounding and shielding a plasma cutting system to minimize its susceptibility to EMI (also known as noise). It also describes the service ground, Protective Earth (PE) ground, and Direct Current (DC) power ground. The diagram at the end of this section shows these types of grounds in a plasma cutting system.

The grounding practices in this documentation have been used on many installations with excellent results, and Hypertherm recommends that these practices be a routine part of the installation process. The actual methods used to implement these practices may vary from system to system, but should remain as consistent as possible. However, due to the variation in equipment and installations, these grounding practices may not succeed in every case to eliminate EMI problems. Hypertherm recommends that you consult your national and local electrical codes to make sure that the grounding and shielding practices that you use comply with the requirements for your location.

## Types of grounding

When you set up an XPR cutting system, make sure that you comply with the four types of grounding: service ground, PE ground, DC power ground, and EMI grounding and shielding.

### Service ground

Service ground (also known as safety ground) is the grounding system that applies to the incoming line voltage. It prevents a shock hazard to any personnel from any of the equipment or the cutting table. It includes the service ground coming into the plasma cutting system and other systems, such as the CNC and the motor drives, and the supplemental ground rod connected to the cutting table. In the plasma circuits, the ground is carried from the plasma power supply chassis to the chassis of each separate console through the interconnecting cables.

### PE ground

PE ground is the grounding system inside the electrical equipment. The PE ground, which connects to the service ground, provides electrical continuity between the equipment and the Alternating Current (AC) service.

### DC power ground

DC power ground (also known as cutting current ground or work) is the grounding system that completes the path of the cutting current from the torch back to the plasma cutting system. It requires that the positive cable from the plasma cutting system be firmly connected to the cutting table ground bus with a correctly sized cable. It also requires that the slats, on which the workpiece rests, make firm contact with the table and the workpiece.

### EMI grounding and shielding

EMI grounding and shielding is the grounding system that limits the amount of EMI emitted by the plasma cutting system and motor drive system. It also limits the amount of EMI that is received by the CNC and other control and measurement circuits. The grounding practices described in this section mainly target EMI grounding and shielding.

## Grounding practices

When you set up an XPR cutting system, make sure that you comply with all best practices for correctly grounding the system.

- Unless noted, for XPR cutting systems, use cables with a minimum gauge of 21.2 $mm^2$ (4 AWG) (047031) for the EMI ground cables shown in the Example grounding diagram with a plasma cutting system on page 76.
- The cutting table is used for the common, or star, EMI ground point and should have threaded studs welded to the table with a copper bus bar mounted on them. A separate bus bar should be mounted on the gantry as close to each motor as possible. If there are motors at each end of the gantry, run a separate EMI ground cable from the far motor to the gantry bus bar. The gantry bus bar should have a separate, heavy EMI ground cable 21.2 $mm^2$ (4 AWG; 047031) to the table bus bar. The EMI ground cables for the torch lifter and the Remote High Frequency (RHF) console or combined ignition/gas connect console must each run separately to the table ground bus.
- Inadequate grounding not only exposes operators to dangerous voltages, but inadequate grounding also increases the risk of equipment failure and unnecessary downtime. Ideally a ground should be zero ohms resistance, but field experience indicates under 1 ohm resistance is satisfactory for most applications. Hypertherm recommends that you consult your national and local electrical codes to make sure that the grounding and shielding practices that you use comply with the requirements for your location.

- A ground rod (a PE ground) that meets all applicable national and local electric codes must be installed within 6 m (20 ft) of the cutting table. For XPR cutting systems, the PE ground must be connected to the cutting table ground bus bar using a minimum 21.2 $mm^2$ (4 AWG) grounding cable (047031). Consult an electrician in your location to make sure that your grounding meets all national and local electric codes.
- For the most effective shielding, use the Hypertherm CNC interface cables for Input/Output (I/O) signals, serial communication signals, between plasma cutting systems in multi-drop connections, and for interconnections between all components of the Hypertherm system.
- All hardware used in the ground system must be brass or copper. While you can use steel studs welded to the cutting table for mounting the ground bus, no other aluminum or steel hardware can be used in the ground system.
- AC power, PE, and service grounds must be connected to all equipment according to national and local codes.
- For a cutting system with a RHF console or combined ignition/gas connect console, the positive, negative, and pilot arc cables should be bundled together for as long a distance as possible. The torch lead, work cable, and the pilot arc (nozzle) cables may be run parallel to other wires or cables only if they are separated by at least 150 mm (6 inches). If possible, run power and signal cables in separate cable tracks.
- For a cutting system with a RHF console or combined ignition/gas connect console, Hypertherm recommends that you mount this console as close as possible to the torch. This console also must have a separate ground cable that connects directly to the cutting table ground bus bar.
- Each Hypertherm component, and any other CNC or motor drive cabinet or enclosure, must have a separate ground cable to the common (star) ground on the table. This includes the ignition/gas connect console, whether it is bolted to the plasma cutting system or to the cutting table.
- For XPR cutting systems, the coupler on the pilot arc and coolant hose assembly must be connected firmly to the gas connect console and TorchConnect console collars. Make sure to tighten the clamp. The collar on the torch lead must be connected firmly to the torch sleeve. Make sure to tighten the clamp. Connect a ground cable (10 AWG) to the flat terminal on the torch mounting sleeve.
- The torch holder and the torch breakaway mechanism – the part mounted to the lifter, not the part mounted to the torch – must be connected to the stationary part of the lifter with copper braid at least 12.7 mm (0.5 inches) wide. A separate cable must run from the lifter to the gantry ground bus bar. The valve assembly should also have a separate ground connection to the gantry ground bus bar.
- If the gantry runs on rails that are not welded to the table, then each rail must be connected with a ground cable from the end of the rail to the table. The rail ground cables connect directly to the table and do not need to connect to the table ground bus bar.

- If you are installing a voltage divider PCB, mount it as closely as possible to where the arc voltage is sampled. One recommended location is inside the plasma power supply enclosure. If a Hypertherm voltage divider PCB is used, the output signal is isolated from all other circuits. The processed signal should be run in twisted shielded cable (Belden® 1800F or equivalent). Use a cable with a braided shield, not a foil shield. Connect the shield to the chassis of the plasma cutting system and leave it unconnected at the other end.
- All other signals (analog, digital, serial, and encoder) should run in twisted pairs inside a shielded cable. Connectors on these cables should have a metal housing. The shield, not the drain, should be connected to the metal housing of the connector at each end of the cable. Never run the shield or the drain through the connector on any of the pins.

**Figure 9 -** Plasma cutting system components connected to a cutting table ground bus

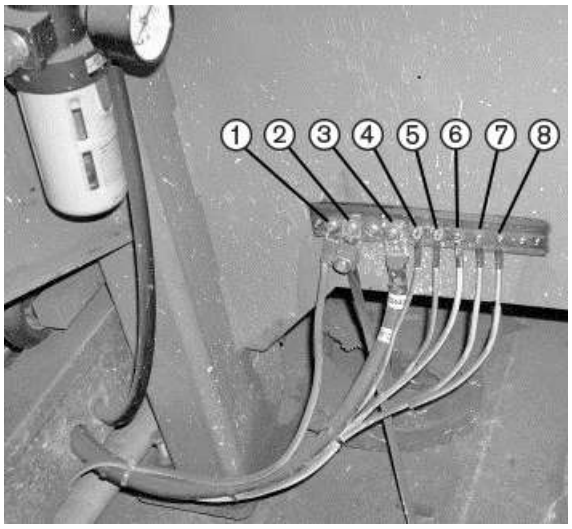


**1** Gantry ground bus

**2** Ground rod

**3** Plasma cutting system work cable (+)

**4** Gas connect console

**5** CNC enclosure

**6** Torch holder

**7** Plasma cutting system chassis

**8** TorchConnect console

Cooler, if applicable (not shown)

The following picture shows an example of a gantry ground bus. It is bolted to the gantry, close to the motor. All of the individual ground cables from the components mounted on the gantry connect to the bus. A single heavy cable then connects the gantry ground bus to the table ground bus.

**Figure 10 -** Gantry ground bus example

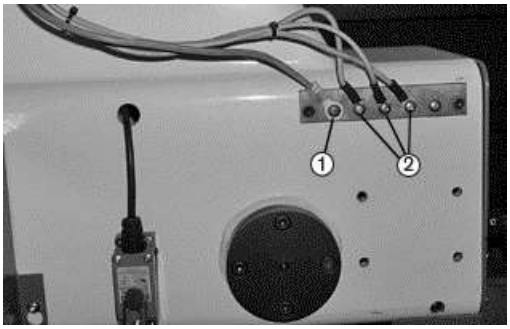


**1** Cable to the cutting table ground bus

**2** Ground cables from components on the gantry

# Example grounding diagram with a plasma cutting system

**Figure 11 -** Example grounding diagram with a plasma cutting system

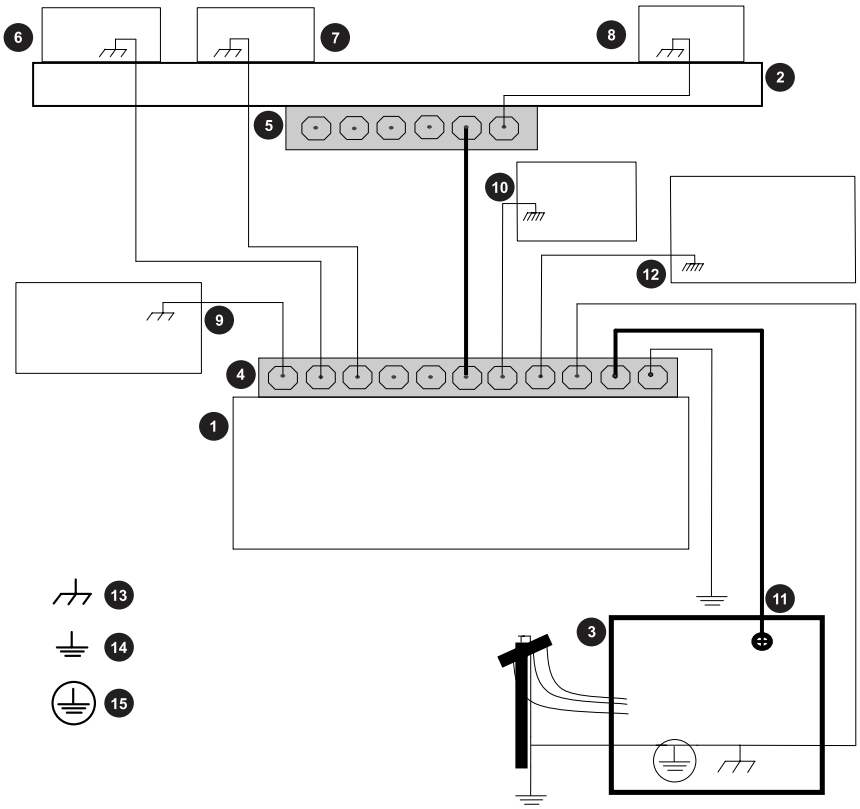


**1** Cutting table

**Figure 11 -** Example grounding diagram with a plasma cutting system (continued)

**2** Gantry

**3** Plasma system

**4** Table ground bus bar

**5** Gantry ground bus bar

**6** Torch height control lifter

**7** TorchConnect console

**8** CNC

**9** Torch height control module

**10** Gas connect console. Connect to table ground bus bar. [1]

**11** DC power ground (work)

**12** Cooler, if applicable

**13** Chassis and EMI ground

**14** Service ground

**15** PE ground

1 The ignition console is integrated into the gas connect console for XPR cutting systems.

This example is based on practices in North America. Other regions can have different national or local electrical codes. Hypertherm recommends that you consult your national and local electrical codes to make sure that the grounding and shielding practices that you use comply with the requirements for your location.

# 3 Installation

## Before you begin installation

Before you begin installation, make sure to:

- Read, understand, and obey all of the safety instructions that are in this manual, the *Safety and Compliance Manual (80669C)*, the *Radio Frequency Warning Manual (80945C)*, and affixed to the cutting system. Failure to follow safety instructions can result in personal injury or equipment damage.
- Get all necessary reference documents. Refer to Document requirements on page 41.
- Understand and obey the following requirements when planning where to put system components:
  - Worksite requirements for system components on page 65
  - Length requirements for hoses, cables, and leads on page 66
  - Bend-radius requirements for hoses, cables, and leads on page 66
  - Distance requirements between high-frequency cables and control cables on page 68
  - Distance requirements for ventilation and access on page 68
  - Distance requirements for communications on page 69
- Understand and obey all applicable national and local codes and system requirements:
  - Electrical codes and requirements on page 44
  - Process-gas requirements for all gas connect consoles on page 48
  - Plumbing requirements for supply gases on page 50 and Regulator requirements for supply gases on page 53
  - Shield-water requirements (VWI and OptiMix) on page 55
  - Recommended grounding and shielding on page 72

This plasma system can make more than the permitted acoustical noise levels as defined by national and local codes. Always put on correct ear protection when cutting or gouging. Any acoustical noise

measurements taken are related to the specific environment in which the system is used. Refer to *Noise can damage hearing* in the *Safety and Compliance Manual (80669C)*.

In addition, you can find an *Acoustical Noise Data Sheet* for your system at www.hypertherm.com/docs. In the search box, enter data sheet.

**WARNING**

**ELECTRIC SHOCK CAN KILL**

If the line-disconnect switch is not in the OFF position you can get a serious electric shock. Electric shock can seriously injure or kill you.

The line-disconnect switch must be in the OFF position before you connect the power cord to the cutting system. It must REMAIN in the OFF position until all installation steps are complete. In the United States, use a "lock out/tag out" procedure until installation is complete. In other countries, follow the appropriate national and local safety procedures. Refer to the *Safety and Compliance Manual (80669C)* for more safety information.

**WARNING**

**ELECTRIC SHOCK CAN KILL**

Voltages in the cutting system can cause serious electric shock. Electric shock can seriously injure or kill you.

When the line-disconnect switch is in the ON position, there is line voltage throughout the cutting system. Use extreme caution if you do diagnosis or maintenance tasks when the line-disconnect switch is in the ON position.

## ⚠ WARNING

**ELECTRIC SHOCK CAN KILL**

The plasma power supply contains dangerous electric voltages that can seriously injure or kill you. Even if the plasma power supply is turned OFF, you can still get a serious electric shock if the plasma power supply remains connected to an electric power source.

Use extreme caution if you do diagnosis or maintenance tasks when the plasma power supply remains connected to an electric power source and the outer cover or panels are removed.

## ⚠ WARNING

**HYDROGEN GAS CAN CAUSE AN EXPLOSION OR FIRE**

Hydrogen is a flammable gas that can cause an explosion or fire if it is not removed.

Keep flames away from cylinders and hoses that contain hydrogen. Keep flames and sparks away from the torch when using hydrogen as a plasma gas.

Consult your local safety, fire, and building code requirements for the storage and use of hydrogen.

Hypertherm recommends that you install an exhaust ventilation system to remove the hydrogen-enriched atmosphere that can collect when hydrogen is used as the plasma gas for cutting.

Flashback arrestors are REQUIRED to stop the spread of fire to the supply gases (unless a flashback arrestor is not available for a specific gas or pressure).

As an installer or user, you must supply the exhaust ventilation and flashback arrestors for your cutting system. You can get them from your cutting machine supplier.

## WARNING

**OXYGEN GAS CAN CAUSE A FIRE HAZARD**

If you use oxygen as the plasma gas for cutting, it can cause a potential fire hazard due to the oxygen-enriched atmosphere that collects. A fire can occur if oxygen is not removed.

Hypertherm recommends that you install an exhaust ventilation system to remove the oxygen-enriched atmosphere that can collect when oxygen is used as the plasma gas for cutting.

Flashback arrestors are REQUIRED to stop the spread of fire to the supply gases (unless a flashback arrestor is not available for a specific gas or pressure).

As an installer or user, you must supply the exhaust ventilation and flashback arrestors for your cutting system. You can get them from your cutting machine supplier.

## WARNING

**COOLANT CAN BE IRRITATING TO SKIN AND EYES AND HARMFUL OR FATAL IF SWALLOWED**

Propylene glycol and benzotriazole are irritating to skin and eyes, and harmful or fatal if swallowed.

When you come into contact, flush skin or eyes with water. If swallowed, seek immediate medical attention.

## *NOTICE*

**AUTOMOTIVE ANTIFREEZE CAN DAMAGE THE TORCH COOLANT SYSTEM**

Antifreeze contains chemicals that can damage the torch coolant system.

Never use automotive antifreeze in place of Hypertherm coolant.

## NOTICE

**LOW COOLANT LEVELS CAN DAMAGE THE CUTTING SYSTEM AND COOLANT PUMP**

There is a risk of serious damage to the cutting system and to the coolant pump if you operate the cutting system with no coolant or with low coolant. If your coolant pump is damaged, pump replacement can be necessary.

Never operate the cutting system if you get a low coolant level notice.

## NOTICE

**INCORRECT COOLANT CAN DAMAGE THE CUTTING SYSTEM**

Using incorrect coolant can cause damage to the plasma cutting system.

Refer to Coolant requirements on page 57.

## NOTICE

**PTFE TAPE CAN CAUSE CLOGGED VALVES, REGULATORS, AND TORCHES**

Never use PTFE tape on any joint preparation. Use only a liquid or paste thread sealant on male thread ends.

## NOTICE

**DIRTY, OILY AIR CAN CAUSE DAMAGE TO THE AIR FILTER BOWL**

Some air compressors use synthetic lubricants that contain esters. Esters can damage the polycarbonates in the air filter bowl.

Add additional gas filtration if necessary.

**NOTICE**

**FOR THE BEST CUT QUALITY AND CONSUMABLE LIFE USE THE CORRECT LEAD LENGTHS**

Cut quality and the lifespan of consumables will be decreased if you change the lead lengths.

The manufactured lengths of torch and console leads are critical for system performance. Never change the lengths of leads.

# Installation checklist

This checklist summarizes major installation steps. You can use it to record their completion. For full information, refer to Installation steps on page 91.

- ☐ Put the system components in position.
  - ☐ Plasma power supply
  - ☐ Cooler
  - ☐ Gas connect console
  - ☐ TorchConnect console
  - ☐ Torch

  Refer to Configuration with the Core gas connect console on page 61, Configuration with the CorePlus gas connect console on page 62, or Configuration with VWI or OptiMix gas consoles on page 63.

- ☐ Ground the system components.
  - ☐ Plasma power supply
  - ☐ Cooler
  - ☐ Gas connect console
  - ☐ TorchConnect console
  - ☐ Torch lead collar
  - ☐ Cutting table
  - ☐ CNC

  Before you connect hoses, cables, and leads, make sure that all system components are correctly and fully grounded. Refer to Recommended grounding and shielding on page 72.

- ☐ Connect all of the hoses, cables, and leads to the plasma power supply.

Refer to Connect the plasma power supply on page 106.

- ☐ Coolant-supply hose and coolant-return hose to the cooler
- ☐ Power cable, 220 VAC, to the cooler
- ☐ Power cable, 120 VAC, to the gas connect console
- ☐ CAN cable to the cooler
- ☐ Pilot-arc cable to the gas connect console
- ☐ Both negative cables ( - ) to the gas connect console
- ☐ Both work cables to the cutting table

☐ Connect all of the hoses, cables, and leads to the cooler.

Refer to Connect the cooler on page 111.

- ☐ Coolant-supply hose and coolant-return hose from the plasma power supply
- ☐ Coolant-supply hose and coolant-return hose to the gas connect console
- ☐ Power cable, 220 VAC, from the plasma power supply
- ☐ CAN cable from the plasma power supply
- ☐ CAN cable to the gas connect console

☐ Connect all of the hoses, cables, and leads to the gas connect console.

Refer to Connect the gas connect console on page 114.

- ☐ Coolant-supply hose and coolant-return hose from the cooler
- ☐ Power cable, 120 VAC, from the plasma power supply
- ☐ CAN cable from the cooler
- ☐ Both negative cables ( - ) from the plasma power supply
- ☐ Pilot-arc cable from the plasma power supply

☐ Connect both work cables to the cutting table.

☐ Connect the cable and lead assemblies between the Core or CorePlus gas connect console and TorchConnect console.

Refer to Connect the gas connect console (Core, CorePlus) to the TorchConnect console on page 118.

The number and type of gas hose connections is based on the type of gas connect console you have.

- ☐ Pilot-arc and coolant-hose assembly
- ☐ Power, CAN, and 3-gas assembly
- ☐ Power, CAN, and 4-gas assembly

☐ Connect the cable and lead assemblies between the VWI or OptiMix gas connect console and TorchConnect console.

Refer to Connect the gas connect console (VWI, OptiMix) to the TorchConnect console on page 123.

The number and type of gas hose connections is based on the type of gas connect console you have.

- ☐ Pilot-arc, coolant-hose, and shield-water assembly
- ☐ Power, CAN, and 5-gas assembly

☐ Connect the torch-lead assembly to the torch receptacle.

Refer to Install the torch-lead assembly to the torch receptacle on page 136.

☐ Connect the torch-lead assembly to the TorchConnect.

Refer to Connect the torch lead to the TorchConnect console on page 141.

☐ Make sure that the hoses, cables, and leads are correctly installed.

- ☐ Correct type and correct installation
- ☐ No damage or kinks
- ☐ No coils in cables that can create EMI problems
- ☐ Distances between high-frequency leads and control cables obey requirements
- ☐ Distances for communications obey requirements

☐ Remove the torch and consumable parts.

Refer to Remove the torch and consumable parts on page 143.

☐ Install the torch into the torch receptacle.

Refer to Install the torch into the torch receptacle on page 145.

☐ Install the torch mounting bracket.

- ☐ Install the torch mounting bracket onto the torch lifter.

  As an installer or user, you must supply the motorized torch lifter for your cutting system. Refer to Torch lifter requirements on page 70.

- ☐ Install the torch in the torch mounting bracket on page 147.

  As an installer or user, you must supply the torch mounting bracket for your cutting system. Refer to Torch mounting bracket requirements on page 70.

☐ Install the consumables.

Refer to Install the consumables on page 149.

- ☐ Make sure the consumables are the correct type and correctly installed.

The torch head that comes with the XPR torch assembly kit (10083906) has 460 A mild steel consumables pre-installed.

- ☐ Install the torch into the torch receptacle.

  Refer to Install the torch into the torch receptacle on page 145.

- ☐ Connect electric power to the cutting system on page 151.
- ☐ Make sure that the communication method for the CNC interface is installed correctly.
  - ☐ EtherCAT and remote on-off with discrete

    Refer to Connect to the plasma power supply with EtherCAT on page 155.

  - ☐ Wireless (XPR web interface) and discrete
  - ☐ Serial RS-422 and discrete
  - ☐ Remote on-off must be wired discretely by the cutting system manufacturer.

    A feature of the control PCB is that it offers redundancy to the standard remote on-off switch. If redundant remote-on off is enabled, the switches for both the standard and redundant remote on-off must be set to ON to supply electric power to the cutting system. Refer to Install a redundant remote on-off switch on page 207.

- ☐ Install the coolant.
  - ☐ Refer to Fill the cutting system with coolant on page 209.
  - ☐ Make sure that the coolant type is correct.

    Refer to Coolant requirements on page 57.

  - ☐ Make sure that the coolant reservoir is full.

## Configuration with Core gas connect consoles

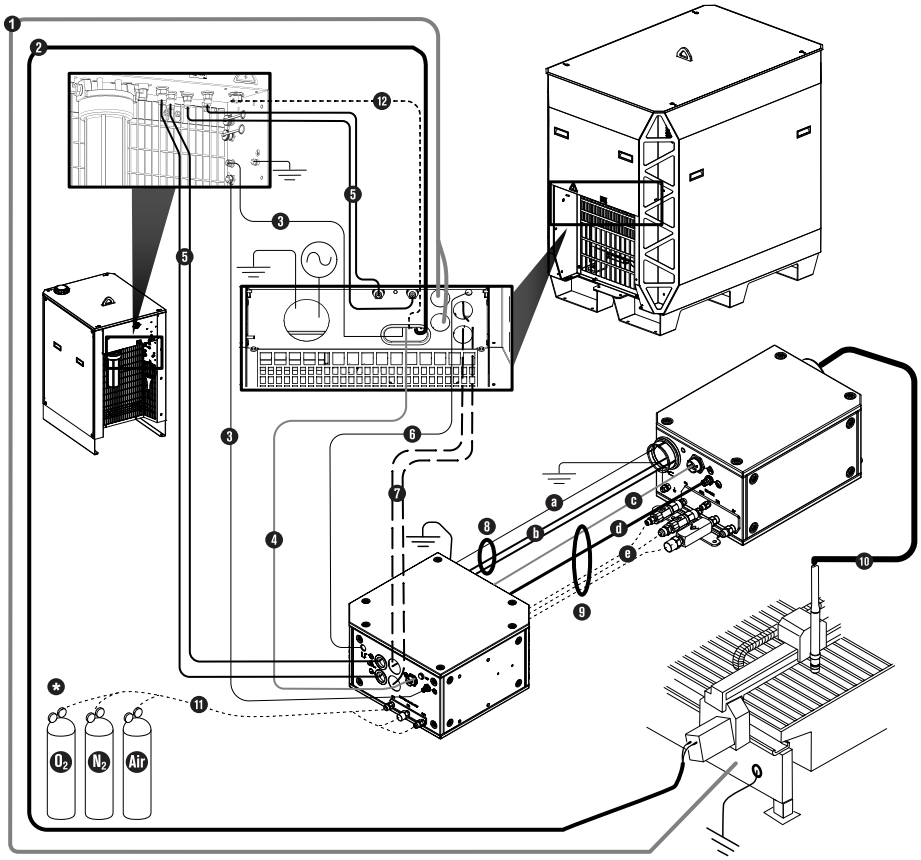


**1** Work cables

**2** CNC connection cable (EtherCAT shown)

**3** CAN cable

**4** Power cable, 120 VAC

**5** Coolant-supply hose and coolant-return hose

**6** Pilot-arc cable

**7** Negative cables

**8** Pilot-arc and coolant assembly

**8a** Pilot-arc cable

**8b** Coolant-supply hose and coolant-return hose

**9** Power, CAN, 3-gas assembly

**9c** Power cable, 120 VAC

**9d** CAN cable

**9e** Three gas hoses (Core)

**10** Torch lead

**11** Hoses for supply gases

**12** Power cable, 220 VAC

***** Regulators

Put a gas regulator 3 meters (10 feet) or less from the gas connect console, or adjust inlet gas pressures to be in the specified process gas tolerances.

# Configuration with CorePlus gas connect consoles

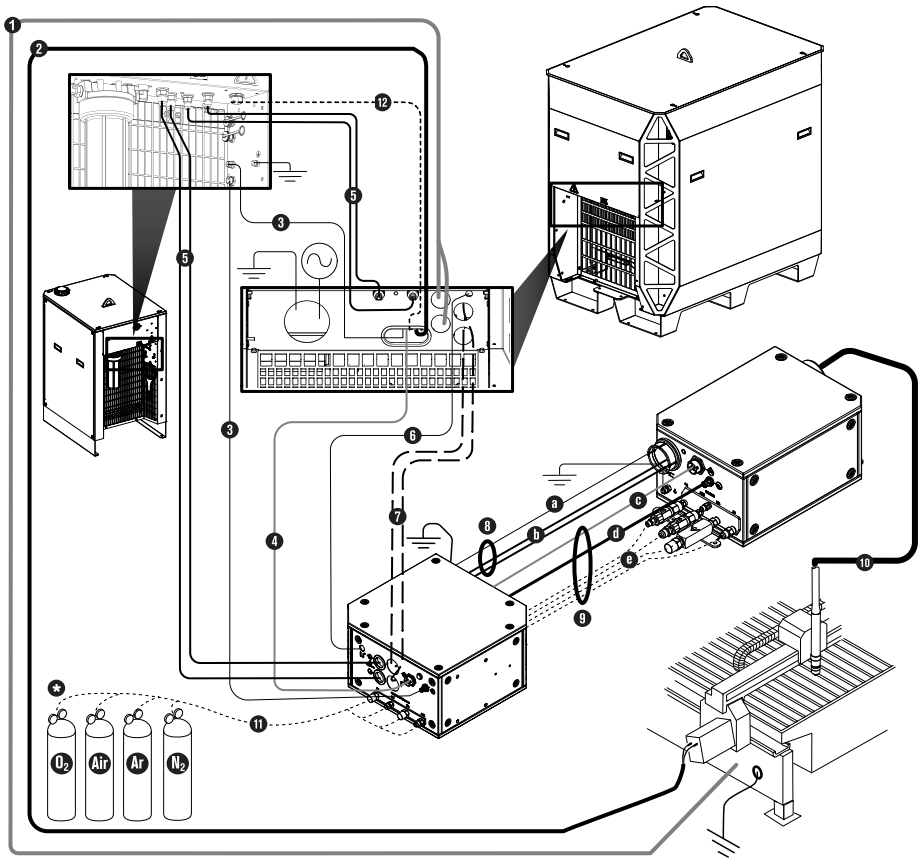


**1** Work cables

**2** CNC connection cable (EtherCAT shown)

**3** CAN cable

**4** Power cable, 120 VAC

**5** Coolant-supply hose and coolant-return hose

**6** Pilot-arc cable

**7** Negative cables

**8** Pilot-arc and coolant assembly

**8a** Pilot-arc cable

**8b** Coolant-supply hose and coolant-return hose

**9** Power, CAN, 4-gas assembly

**9c** Power cable, 120 VAC

**9d** CAN cable

**9e** Four gas hoses (CorePlus)

**10** Torch lead

**11** Hoses for supply gases

**12** Power cable, 220 VAC

***** Regulators

Put a gas regulator 3 meters (10 feet) or less from the gas connect console, or adjust inlet gas pressures to be in the specified process gas tolerances.

# Configuration with VWI or OptiMix gas connect consoles

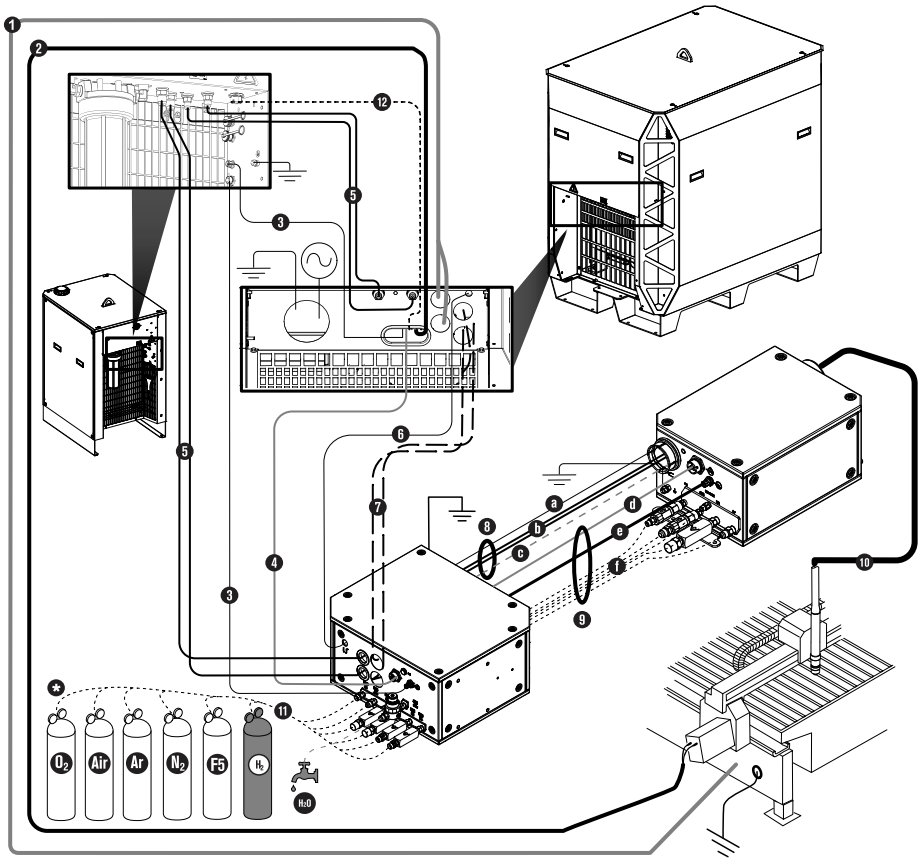


**1** Work cables

**2** CNC connection cable (EtherCAT shown)

**3** CAN cable

**4** Power cable, 120 VAC

**5** Coolant-supply hose and coolant-return hose

**6** Pilot-arc cable

**7** Negative cables

**8** Pilot-arc, coolant, and shield-water assembly

**8a** Pilot-arc cable

**8b** Coolant-supply hose and coolant-return hose

**8c** Shield-water hose (VWI or OptiMix)

**9** Power, CAN, 5-gas assembly

**9d** Power cable, 120 VAC

**9e** CAN cable

**9f** Five gas hoses (VWI or OptiMix)

**10** Torch lead

**11** Hoses for supply gases/shield water

**12** Power cable, 220 VAC

***** Regulators

Put a gas regulator 3 meters (10 feet) or less from the gas connect console, or adjust inlet gas pressures to be in the specified process gas tolerances.

# Installation steps

Use this information to install the different system components.

## Put the system components in position

### Put the plasma power supply in position

The plasma power supply weighs as much as 635 kg (1,400 lb), based on voltage configuration. It must be lifted and moved with care to avoid injury or damage.

Before you begin:

- Requirements to put system components in position on page 61
- Worksite requirements for system components on page 65

**WARNING**

**HEAVY EQUIPMENT CAN CAUSE SERIOUS INJURY IF DROPPED – LIFT CAREFULLY**

When lifting or moving a heavy component:

- Remove all cables, wires, and other potential obstacles that can get caught on the component.
- Only use lift equipment that can safely lift and support the component.
- If you use the lift eye to lift the component, lift only that component. Do not exceed the maximum lift-eye rating.
- If you use a lift truck, use one with forks that extend along the entire bottom of the component. The bottom of the component has lift-truck slots. Make sure to use them.
- Carefully put when you put the plasma power supply into position. Do not drop it from any height.

1. Make sure that the equipment you use to lift and move heavy system components has these features and capabilities:

| | |
|---|---|
| **Lift truck forks** | Lift truck forks must be long enough to fully support and extend along the entire bottom of the system component and rated to hold its weight. |
| **Lifting equipment** | Lifting equipment must be rated to hold the weight of the system component. |

2. Use approved equipment with slow speeds to balance, lift, move, and put the plasma power supply in a position that obeys requirements for your cutting system configuration and plasma power supply type.

## Put the cooler in position

The cooler weighs 83.46 kg (184 lb). It must be lifted and moved with care to avoid injury or damage.

Before you begin:

- Requirements to put system components in position on page 61
- Worksite requirements for system components on page 65

**WARNING**

**HEAVY EQUIPMENT CAN CAUSE SERIOUS INJURY IF DROPPED – LIFT CAREFULLY**

When lifting or moving a heavy component:

- Remove all cables, wires, and other potential obstacles that can get caught on the component.
- Only use lift equipment that can safely lift and support the component.
- If you use the lift eye to lift the component, lift only that component. Do not exceed the maximum lift-eye rating.
- If you use a lift truck, use one with forks that extend along the entire bottom of the component. The bottom of the component has lift-truck slots. Make sure to use them.
- Carefully put when you put the plasma power supply into position. Do not drop it from any height.

1. Make sure that the equipment you use to lift and move heavy system components has these features and capabilities:

| | |
|---|---|
| **Lift truck forks** | Lift truck forks must be long enough to fully support and extend along the entire bottom of the system component and rated to hold its weight. |
| **Lifting equipment** | Lifting equipment must be rated to hold the weight of the system component. |

2. Use approved equipment with slow speeds to balance, lift, move, and put the cooler in a position that obeys requirements for your cutting system configuration.

   Coolant in the reservoir changes weight distribution for the cooler. After coolant installation, the cooler can tilt or move from coolant weight and movement.

## Put the gas connect console in position

All gas connect consoles have three mounting holes on the bottom panel.

Before you begin:

- Requirements to put system components in position on page 61

- Worksite requirements for system components on page 65

1. Put the gas connect console in a position that obeys requirements for your cutting system configuration and gas connect console type.

   If you have questions about when or how to use the mounting holes, speak to your cutting machine supplier or regional Hypertherm Technical Service team.

2. Use the mounting holes on the bottom panel to install the gas connect console as shown.

   The following images show mounting-hole locations and dimensions by gas connect console type:

**Figure 12 -** Mounting-hole locations and dimensions for the Core, CorePlus, and VWI gas connect console

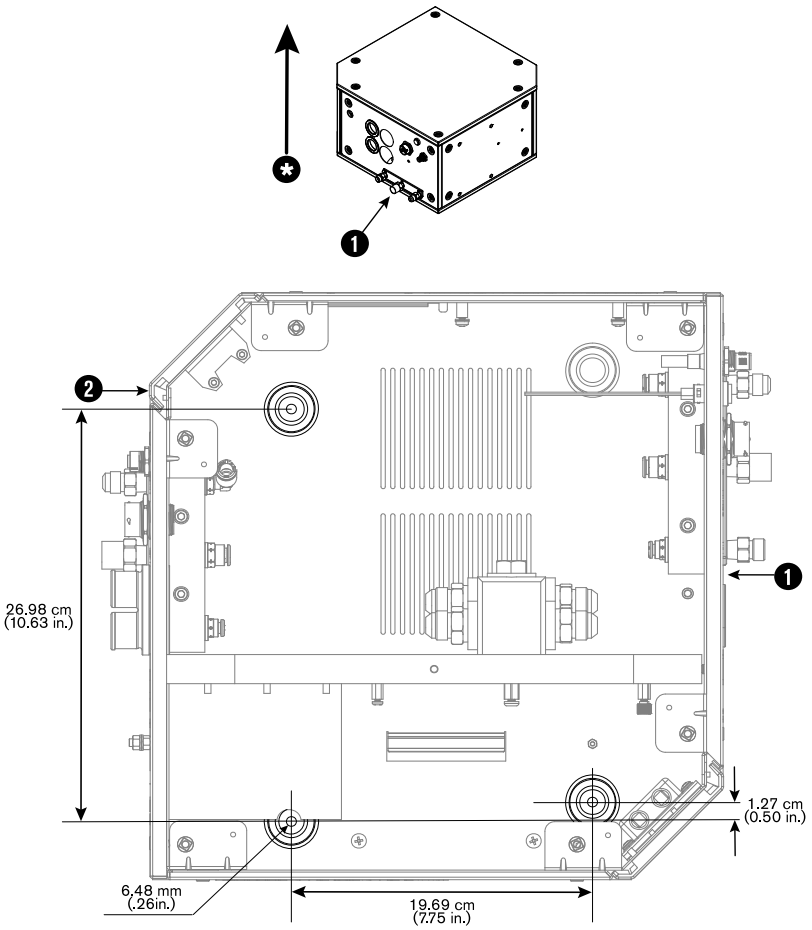


**1** Gas-inlet side

**2** Gas-outlet side

***** Correct orientation. Never install the gas connect console at an angle.

**Figure 13 -** Mounting-hole locations and dimensions for the OptiMix gas connect console

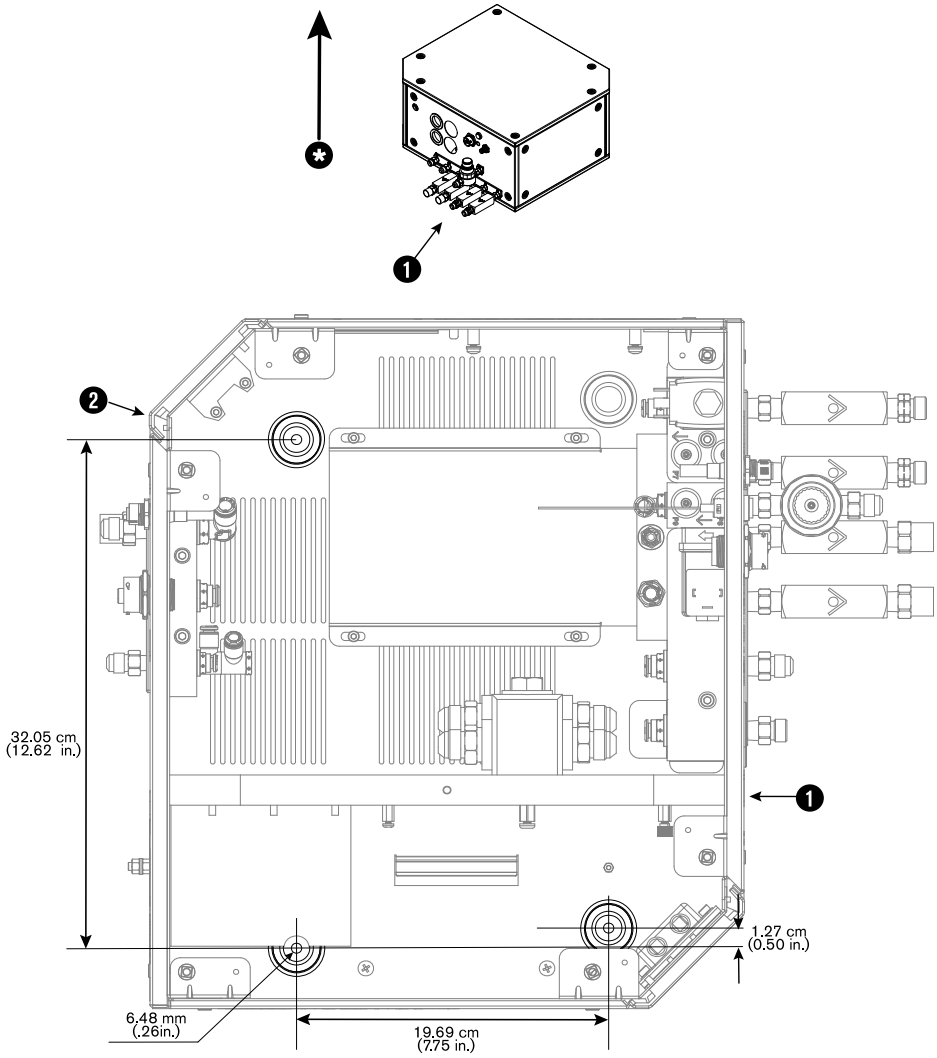


**1** Gas-inlet side

**2** Gas-outlet side

***** Correct orientation. Never install the gas connect console at an angle.

## Put the TorchConnect console in position

There are three options to put the TorchConnect console in position. The factory-installed location for the mounting brackets is on the bottom panel of the console. But, you can move the brackets to the end or to the side.

Before you begin:

- Requirements to put system components in position on page 61
- Worksite requirements for system components on page 65
- A side position with the torch-lead connector on the bottom minimizes the risk that leaked water or coolant will accumulate in the console. Water or coolant in the console can damage internal electrical components.
- A side position with the torch-lead connector on the top makes it necessary to install a support that holds the lead at a minimum bend radius of 15.25 cm (6 in.).

1. Put the TorchConnect console in a position that obeys requirements for your cutting system configuration.

   If you have questions about what position to use or how to install the console, speak to your cutting machine supplier or regional Hypertherm Technical Service team.

2. Use the mounting brackets on the bottom, end, or side panel of the TorchConnect console to put the console in position, as shown.

   The following images show the three options to put the TorchConnect console in position:

**Figure 14 -** The three options to put the TorchConnect console in position

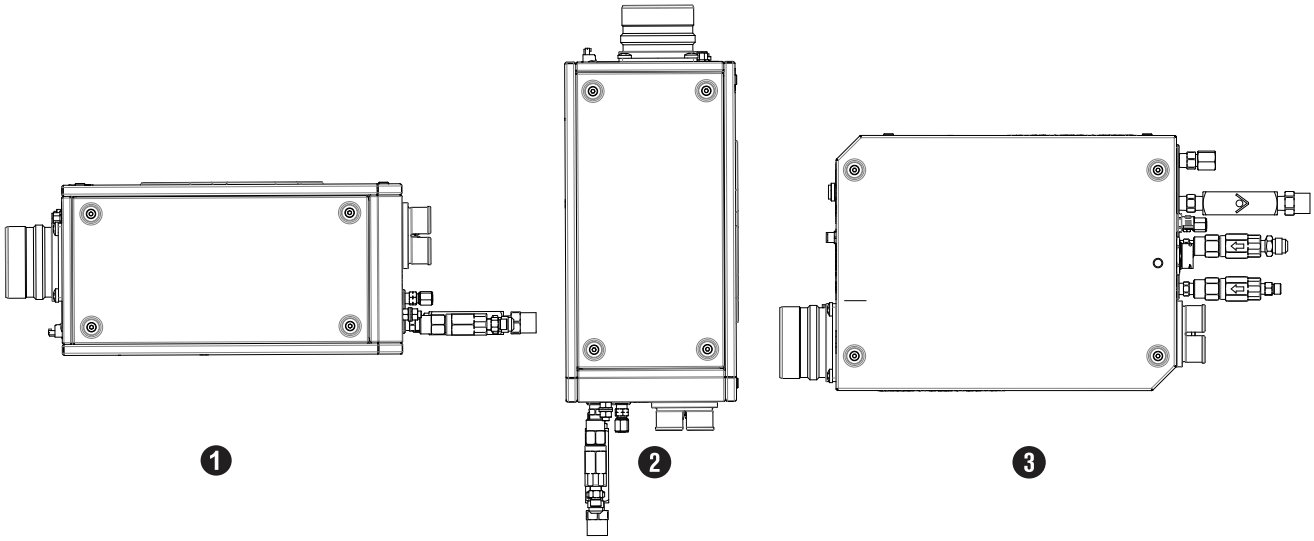


**1** Bottom

**2** End

**3** Side

**Figure 15 -** Mounting-bracket locations and dimensions for the bottom-panel position

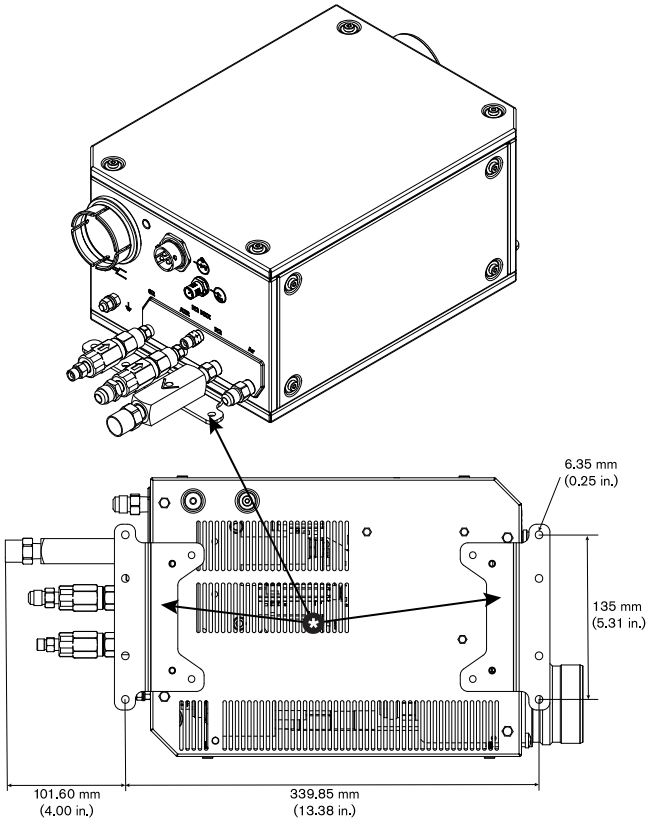

**Figure 16 -** Mounting-bracket locations and dimensions for the side-panel position

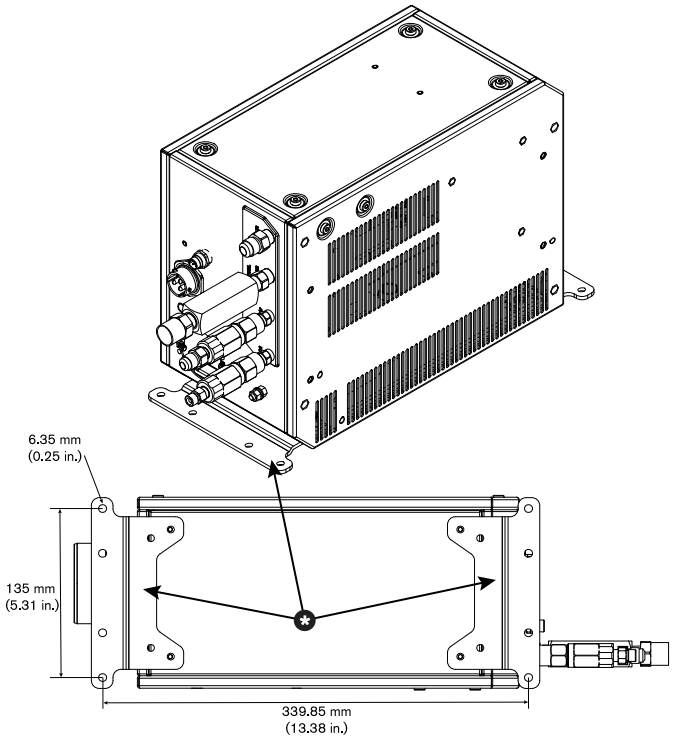


## Ground the system components

System components that are correctly grounded can protect operators and equipment from dangerous voltages. Ground the system components after they are in position, and before you connect the hoses, cables, and leads.

Before you begin:

- Put the system components in position.
- Refer to Recommended grounding and shielding on page 72.
- Ground the plasma power supply.

**Figure 17 -** Location of the ground connection on the plasma power supply

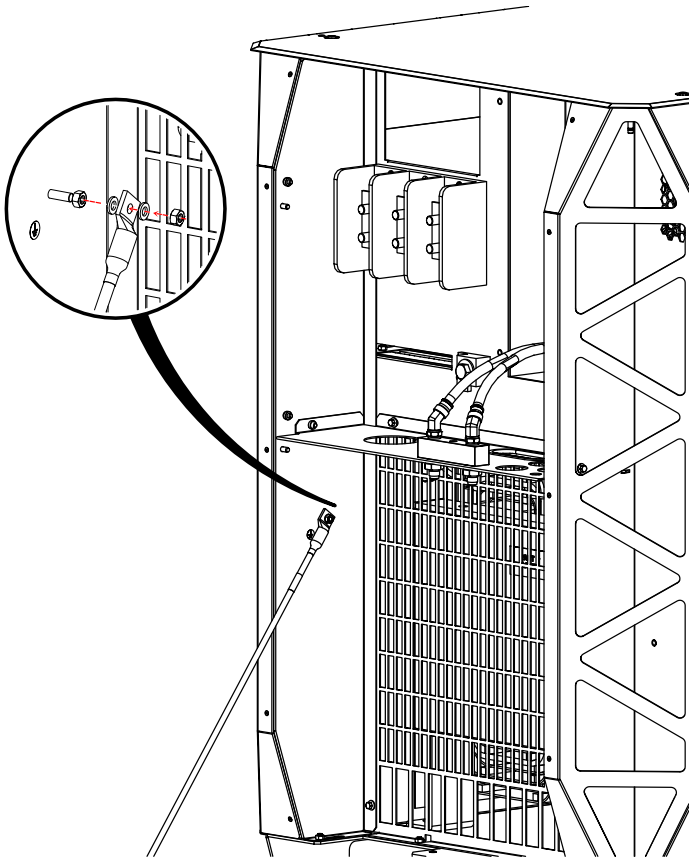

- Ground the cooler.

**Figure 18 -** Location of the ground connection on the cooler

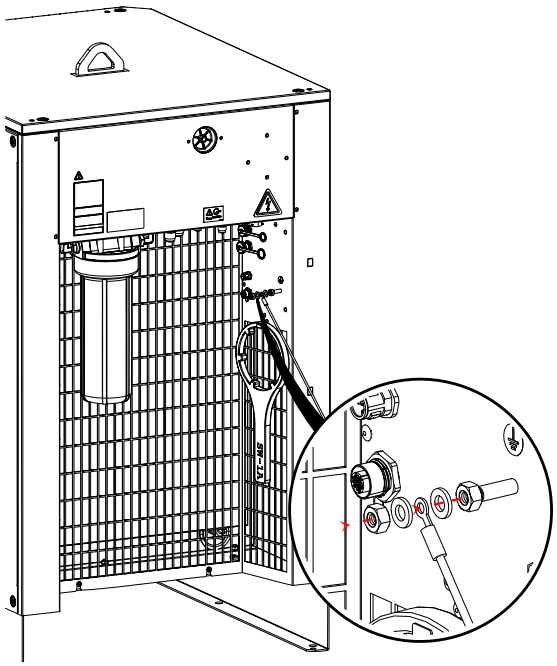

- Ground the gas connect console.

**Figure 19 -** Location of the ground connection on example gas connect consoles

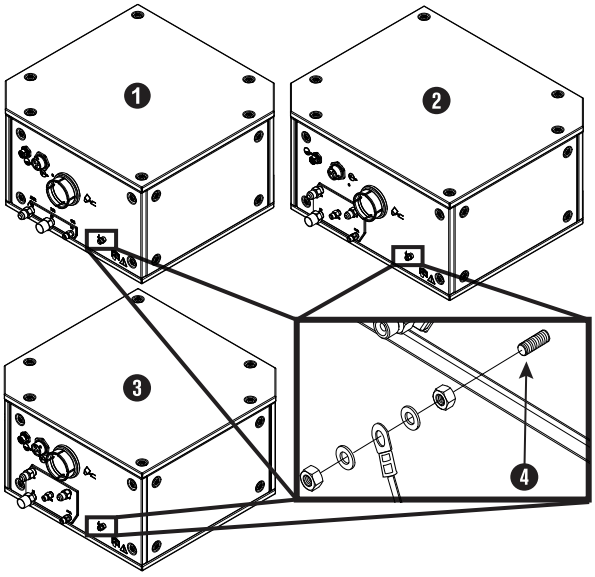


**1** Core and CorePlus gas connect console

**2** OptiMix gas connect console

**3** VWI gas connect console

**Figure 19 -** Location of the ground connection on example gas connect consoles (continued)

**4** Location of the ground connection

- Ground the TorchConnect console.

**Figure 20 -** Location of the ground connection on theTorchConnect console

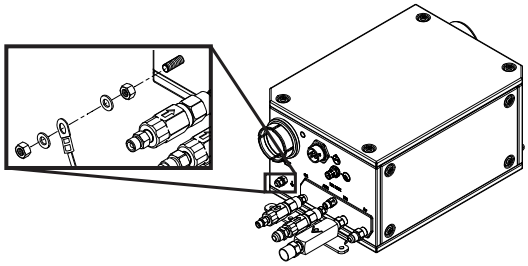

- Ground the torch.

**Figure 21 -** Location of the ground connection on the torch-lead collar

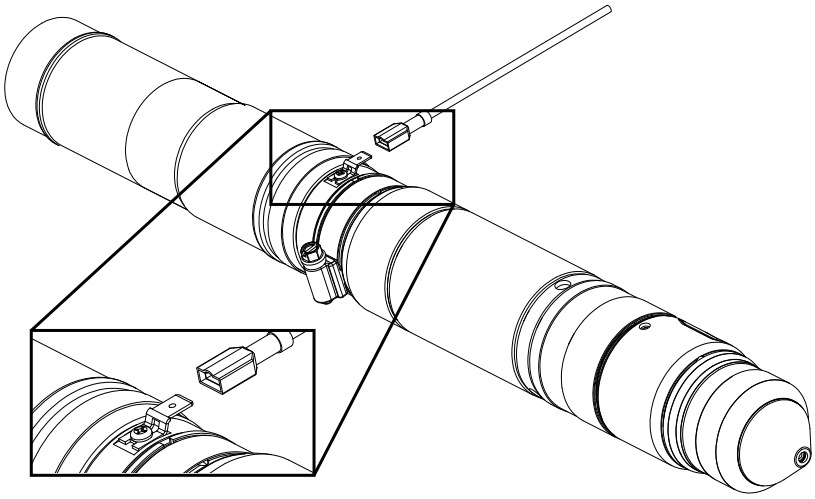

## Remove external panels from the system components

Before you begin:

## NOTICE

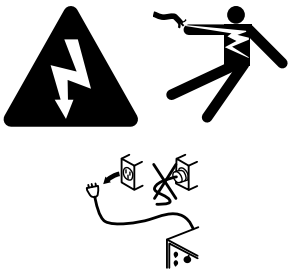

**ELECTRIC SHOCK CAN KILL**

The plasma power supply contains dangerous electric voltages that can seriously injure or kill you. Even if the plasma power supply is turned OFF, you can still get a serious electric shock if the plasma power supply remains connected to an electric power source.

Use extreme caution if you do diagnosis or maintenance tasks when the plasma power supply remains connected to an electric power source and the outer cover or panels are removed. All work that requires removal of the plasma power supply outer cover or panels must be done by a qualified technician. Refer to the *Safety and Compliance Manual (80669C)* for more safety information.

## NOTICE

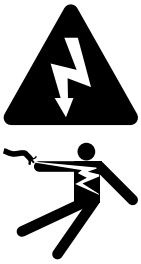

**ELECTRIC SHOCK CAN KILL**

The plasma power supply contains dangerous electric voltages that can seriously injure or kill you. Even if the plasma power supply is turned OFF, you can still get a serious electric shock if the plasma power supply remains connected to an electric power source.

Use extreme caution if you do diagnosis or maintenance tasks when the plasma power supply remains connected to an electric power source and the outer cover or panels are removed.

Before you remove any panels, make sure that **all** electric power is removed from the cutting system.

When the remote on-off switch is set to OFF (disabled), electric power stays ON (active) to the following parts:

- Power-indicator LED on the front of the plasma power supply
- Control PCB
- Control transformer (can be different on input and output)
- Input to the relay that controls the 48 V power supply
- 24 V power supply
- 120 V to the input side of the contactor or contactors

- 120 VAC
- 220 VAC on the power distribution PCB
- 120 VAC to the input side of the 48 VDC power relay
- 220 VAC to the input side of the cooler power relay

- Remove the rear panel from the plasma power supply.

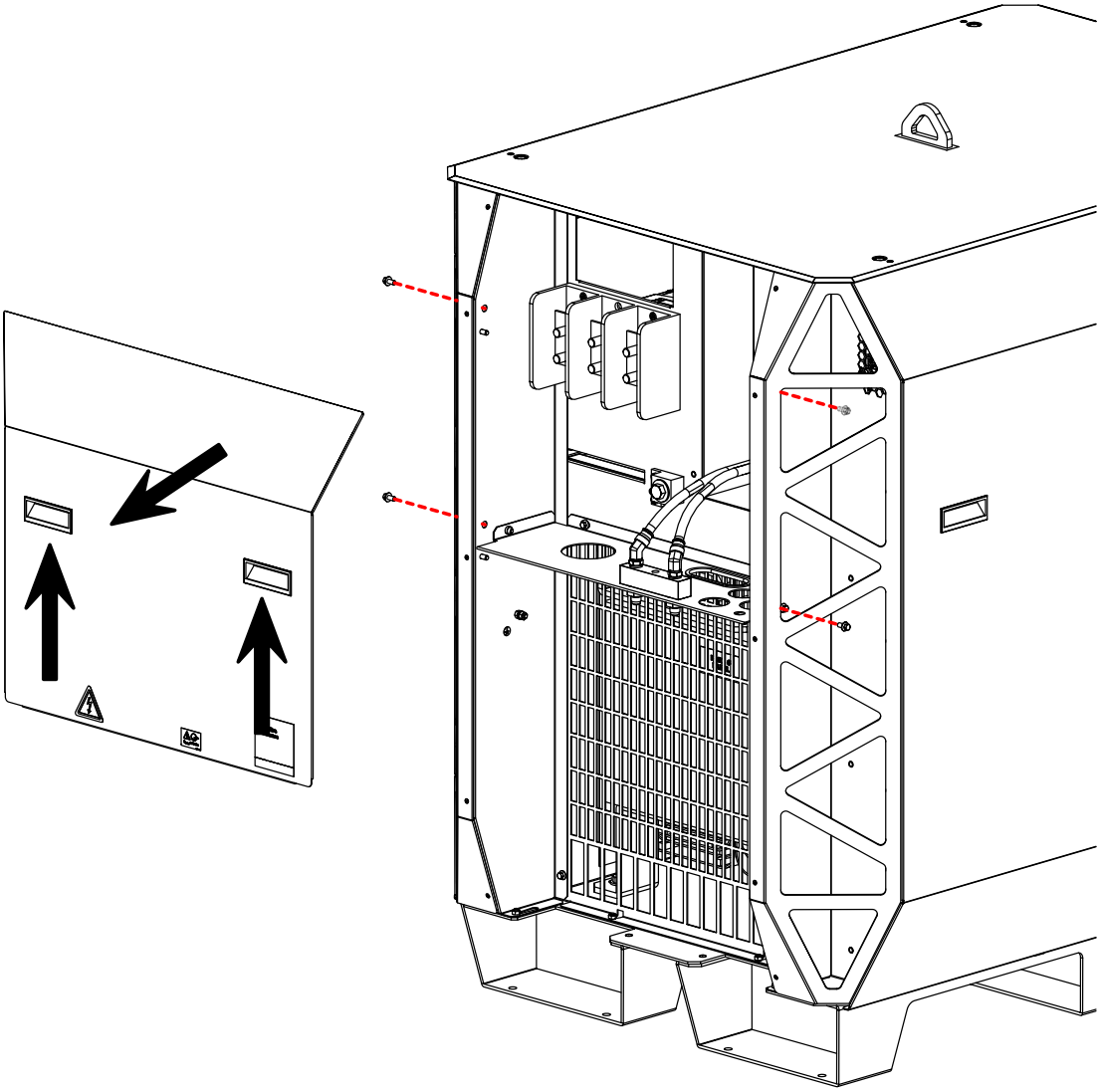

For installation usually it is necessary to remove only the rear panel.

- Remove the external panels from the gas connect console.

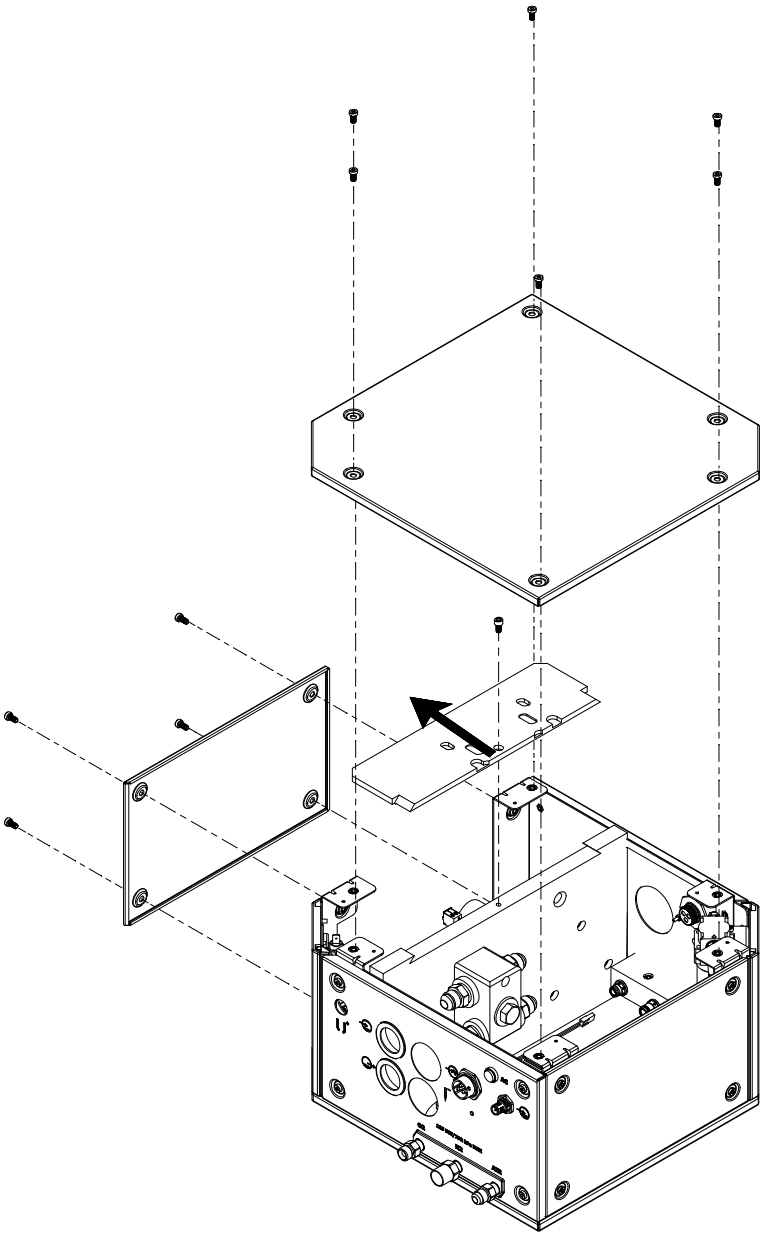

You must move the panel horizontally to remove it.

- Remove the external panels from the TorchConnect console.

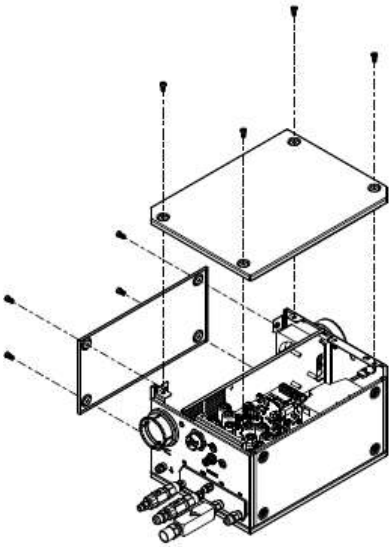

## Prepare the hoses, cables, and leads

Before you install the hoses, cables, and leads, uncoil and examine them.

1. Use a hand-over-hand motion to uncoil the hoses, cables, and leads.

   Keep the flat part of each hose, cable, or lead on the floor as you uncoil it. Do not pull from one end to uncoil.

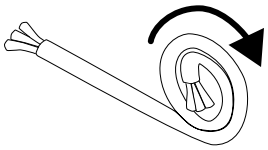

| NOTICE |
| --- |
| **PULLING FROM ONE END TO UNCOIL HOSES, CABLES, AND LEADS CAN CAUSE DAMAGE.**<br>To avoid equipment damage, do not pull from one end to uncoil hoses, cables, and leads. |

2. Make sure that you have the correct hoses, cables, and leads.

   New hoses, cables, and leads ship with a tag or label that has a part number for identification. Do not order or use cables, hoses, or leads that are incorrect or longer than necessary. If you coil a cable or lead because it is too long, EMI problems can occur. EMI problems can have a bad effect on system performance.

3. Examine each hose, cable, and lead for damage.

Equipment damage can have a bad effect on system performance. Speak to your cutting machine supplier or regional Hypertherm Technical Service team.

## Connect the plasma power supply

Use this information to connect the hoses, cables, and leads to the plasma power supply.

Before you begin:

- Put the plasma power supply in position on page 91
- Ground the system components on page 98
- Prepare the hoses, cables, and leads on page 105
- Refer to the label that shows the symbols and connectors on the rear of the plasma power supply.

**Figure 22 -** Example label that shows the symbols and connectors on the rear of the plasma power supply

**Figure 22 -** Example label that shows the symbols and connectors on the rear of the plasma power supply (continued)

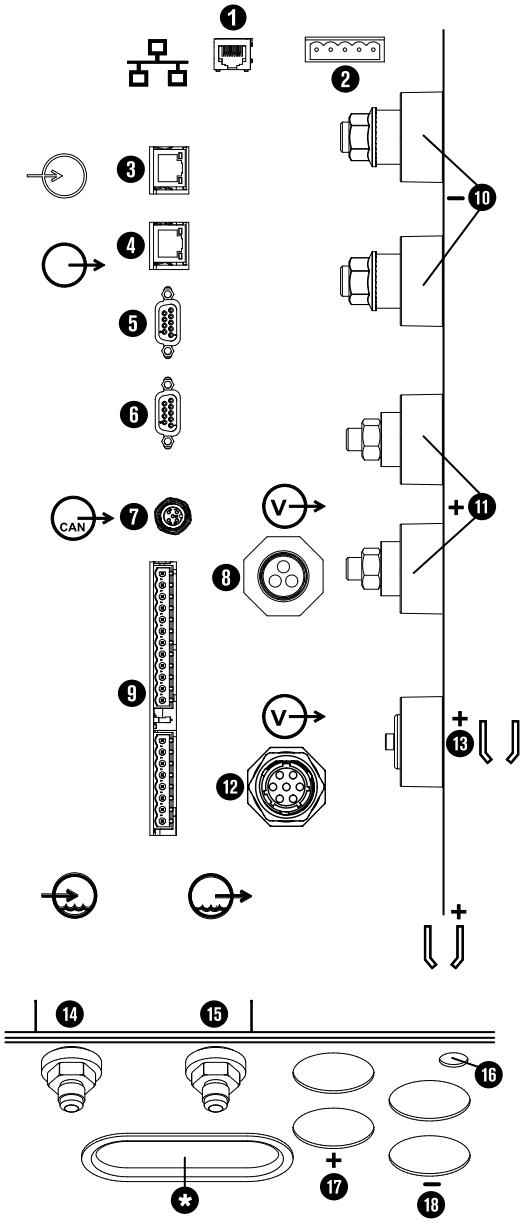


| | |
|---|---|
| **1** | EtherNet Local Area Network (LAN) port: For future applications. **Do not use.** |
| **2** | Expansion PCB connectors: Necessary for redundant remote on-off feature alternate 24 VDC power input, and analog estimated arc voltage output. |
| **3** | EtherCAT-in [1] |

**Figure 22 -** Example label that shows the symbols and connectors on the rear of the plasma power supply (continued)

| | | |
|---|---|---|
| **4** | | EtherCAT-out [1] |
| **5** | | RS-422 cable, 1 of 2 |
| **6** | | RS-422 cable , 2 of 2 |
| **7** | CAN | CAN cable |
| **8** | V | Power cable, 120 VAC, to the gas connect console |
| **9** | | CNC discrete |
| **10** | - | Negative cables, 2 |
| **11** | + | Work cables, 2 |
| **12** | V | Power cable, 220 VAC, to the cooler |
| **13** | + | Pilot-arc cable |
| **14** | | Coolant supply, green |
| **15** | | Coolant return, red |
| **16** | + | Routing hole for the pilot-arc cable |
| **17** | + | Routing hole for the work cables |
| **18** | - | Routing hole for the negative cables |
| ***** | | Use this routing hole for the following cords, cables, and leads: power, RS-422, CNC discrete, EtherCAT-in, EtherCAT-out, and CAN. |

1 Refer to the label on the rear of your plasma power supply.

1. Connect the coolant-hose assembly to the plasma power supply from the cooler.

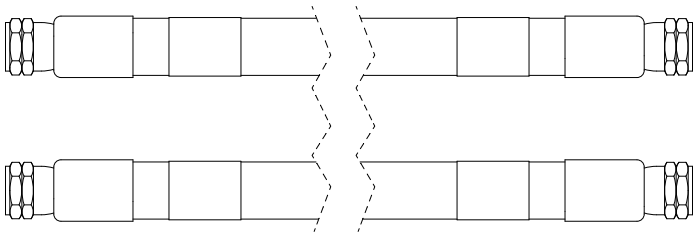

The coolant-hose assembly includes one coolant-supply hose with green bands and one coolant-return hose with red bands.

Refer to Coolant-hose assemblies (cooler to plasma power supply) on page 425 for lengths and part numbers.

2. Connect the 220 VAC power cable to the plasma power supply from the cooler.

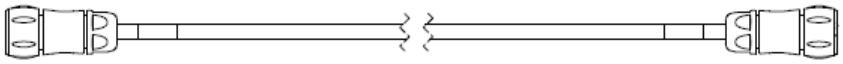

At least one 120 VAC power cable is necessary for all cutting systems. Some cutting systems use one 120 VAC power cable and one 220 VAC power cable.

Refer to Power cables, 220 VAC on page 424 for lengths and part numbers.

3. Connect the 120 VAC power cable to the plasma power supply from the gas connect console.

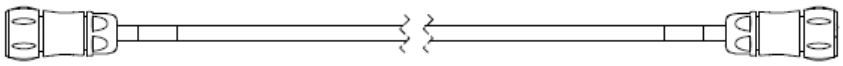

At least one 120 VAC power cable is necessary for all cutting systems. Some cutting systems use one 120 VAC power cable and one 220 VAC power cable.

Refer to Power cable, 120 VAC on page 424 for lengths and part numbers.

4. Connect the CAN cable to the plasma power supply from the cooler.

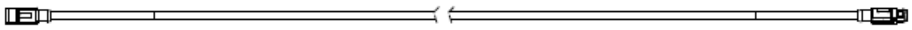

Refer to CAN cables on page 425 for lengths and part numbers.

5. Connect the pilot-arc cable to the plasma power supply from the gas connect console.

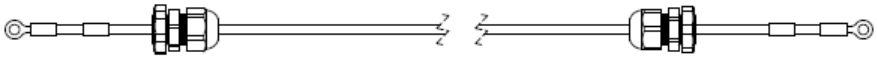

Refer to Pilot-arc cables with strain relief on page 423 for lengths and part numbers.

6. Connect both negative cables to the plasma power supply from the gas connect console.

**Figure 23 -** Negative cable with strain relief

**Figure 23 -** Negative cable with strain relief (continued)

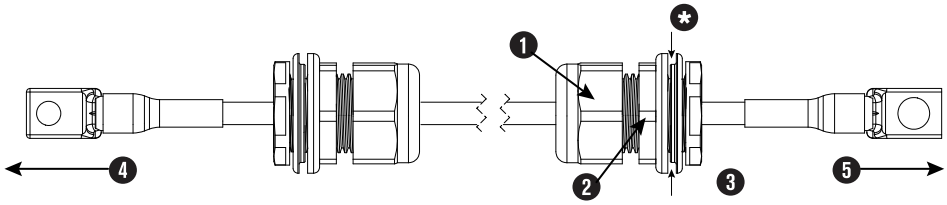


**1** Outer nut

**2** Strain relief nut

**3** Inner nut

**4** To plasma power supply

**5** To gas connect console

***** The sheet metal of the internal console panel intersects here.

Refer to Negative cables with strain relief on page 423 for lengths and part numbers.

a. Remove the inner nut from the strain relief assembly on each negative cable.

b. Put the cable and strain relief nut for both negative cables through the holes in the sheet metal panel.

c. Put the inner nut from the strain relief assembly over the end of each negative cable.

d. Tighten the inner nut to the strain relief nut for each negative cable.

7. Connect both work cables to the plasma power supply from the cutting table.

**Figure 24 -** Work cable with strain relief

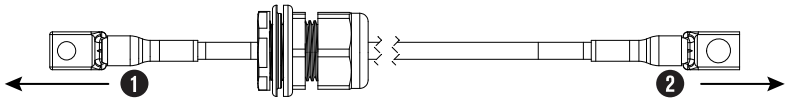


**1** This end goes to the plasma power supply.

**2** This end goes to the cutting table.

At least one work cable is necessary for all cutting systems. Some cutting systems use two work cables.

Refer to Work cables on page 431 for lengths and part numbers.

**Figure 25 -** Connections complete on the rear of the plasma power supply

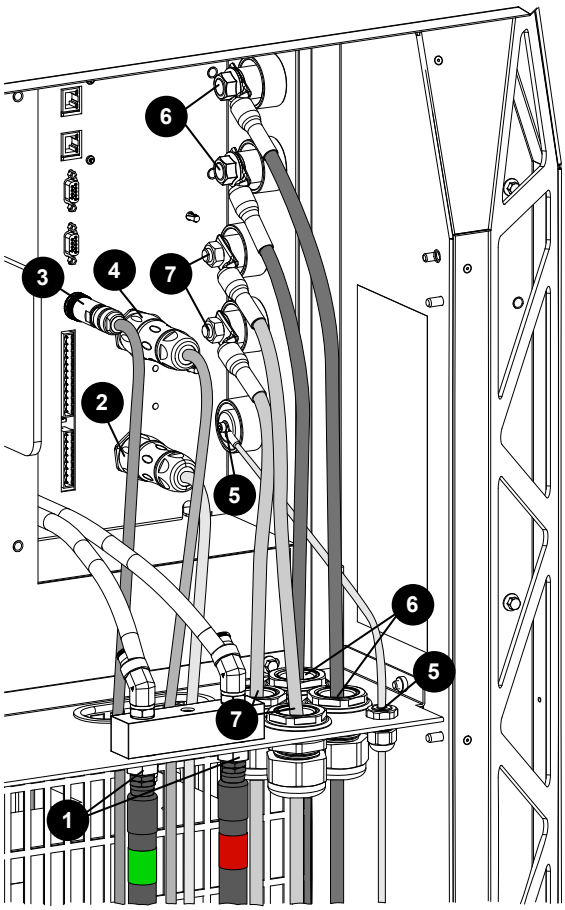


1 Coolant supply, green and coolant return, red

2 Power cable, 220 VAC, to the cooler

3 CAN cable to the cooler

4 Power cable, 120 VAC, to the gas connect console

5 Pilot-arc cable to the gas connect console

6 Negative cables to the gas connect console

7 Work cables to the cutting table

## Connect the cooler

Use this information to connect the hoses, cables, and leads to the cooler.

Before you begin:

- Put the plasma power supply in position on page 91
- Ground the system components on page 98

- Prepare the hoses, cables, and leads on page 105
- Refer to the image that shows the connectors on the rear of the cooler.

**Figure 26 -** Connectors on the rear of the cooler

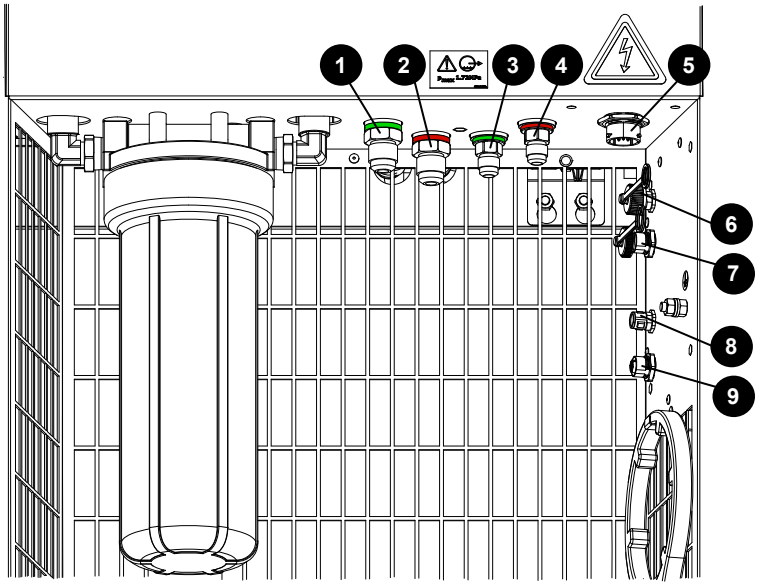


**1** Coolant supply to the gas connect console

**2** Coolant return from the gas connect console

**3** Coolant supply to the plasma power supply

**4** Coolant return from the plasma power supply

**5** Power, 220 VAC, from the plasma power supply

**6** Not used

**7** Not used

**8** CAN in from the plasma power supply

**9** CAN out to the gas connect console

1. Connect the coolant-hose assembly to the cooler from the plasma power supply:

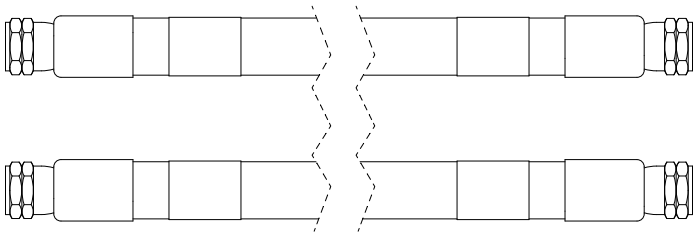

The coolant-hose assembly includes one coolant-supply hose with green bands and one coolant-return hose with red bands.

Refer to Coolant-hose assemblies (cooler to plasma power supply) on page 425 for lenghts and part numbers.

a. Connect the coolant-return hose with the red band to the red coolant-return fitting.

b. Connect the coolant-supply hose with the green band to the green coolant-supply fitting.

2. Connect the coolant-hose assembly to the cooler from the gas connect console:

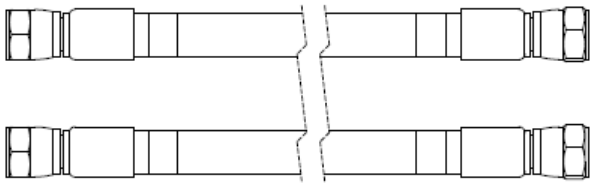

Refer to Coolant-hose assemblies (cooler to gas connect console) on page 425 for lengths and part numbers.

a. Connect the coolant-return hose with the red band to the red coolant-return fitting.

b. Connect the coolant-supply hose with the green band to the green coolant-supply fitting.

3. Connect the female cable connector on the 220 VAC power cable to the cooler from the plasma power supply.

Use your fingers to tighten these connections, do not use tools.

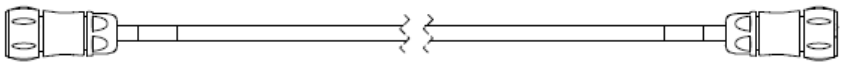

Refer to Power cables, 220 VAC on page 424 for lengths and part numbers.

4. Connect both CAN cables:

Use your fingers to tighten these connections, do not use tools.

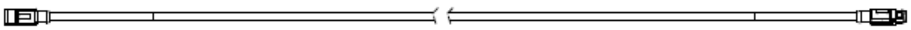

Refer to CAN cables on page 425 for lengths and part numbers.

a. Connect the male cable connector on one CAN cable to the cooler from the gas connect console.

b. Connect the female cable connector on the other CAN cable to the cooler from the plasma power supply.

**Figure 27 -** Connections complete on the rear of the cooler

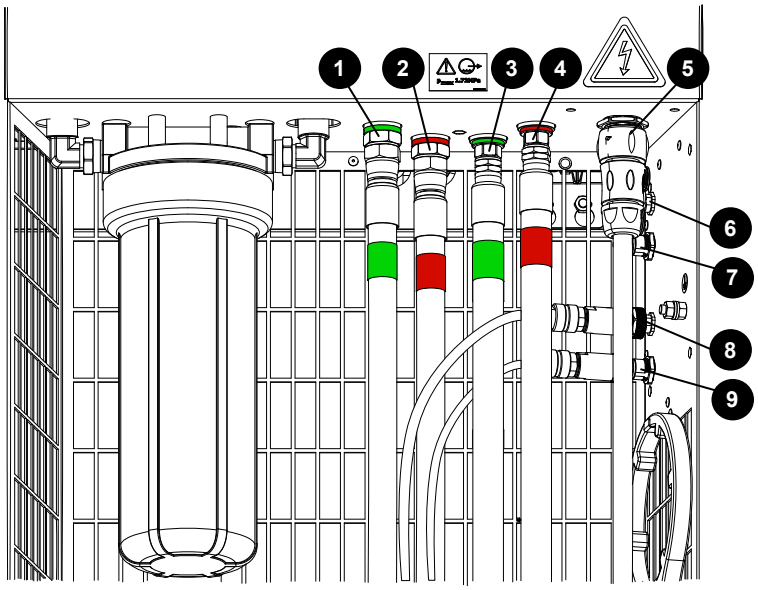


1 Coolant supply to the gas connect console

2 Coolant return from the gas connect console

3 Coolant supply to the plasma power supply

4 Coolant return from the plasma power supply

5 Power, 220 VAC, from the plasma power supply

6 Not used

7 Not used

8 CAN in from the plasma power supply

9 CAN out to the gas connect console

## Connect the gas connect console

Use this information to connect the hoses, cables, and leads to the gas connect console.

Before you begin:

- Put the plasma power supply in position on page 91
- Ground the system components on page 98
- Prepare the hoses, cables, and leads on page 105
- Refer to the image that shows the connections on the gas connect console.

**Figure 28 -** Connectors for hoses, cables, and leads in the gas connect console

**Figure 28 -** Connectors for hoses, cables, and leads in the gas connect console (continued)

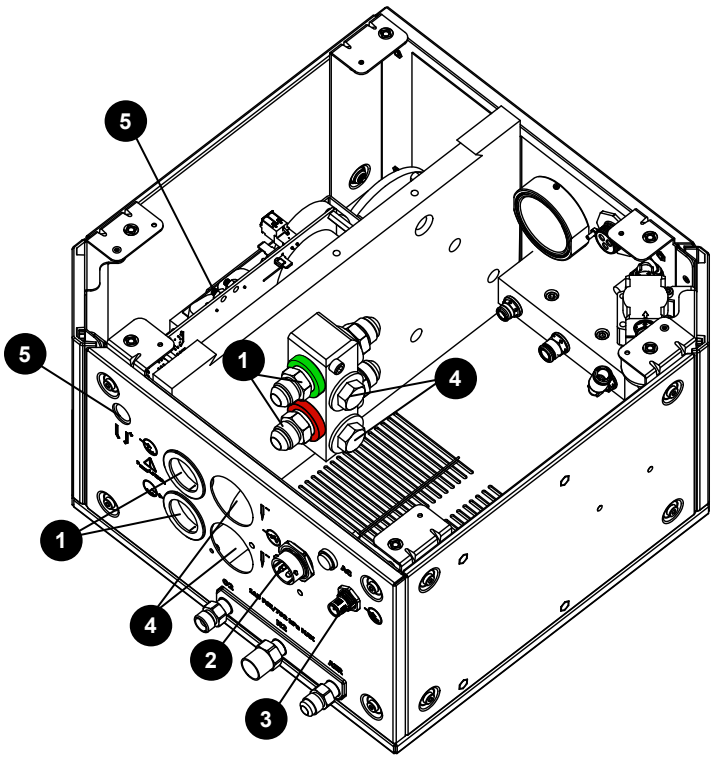


**1** Coolant-supply (green) and coolant-return (red) hoses

**2** Power cable, 120 VAC

**3** CAN cable

**4** Negative cables

**5** Pilot-arc cable

The images that follow show an example gas connect console. Your gas connect console could look different.

1. Connect the coolant-hose assembly to the gas connect console from the cooler.

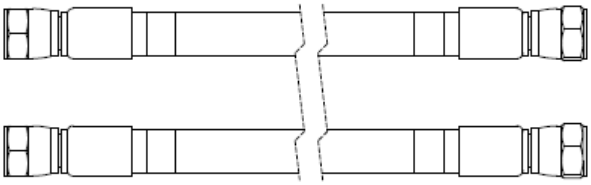

The coolant-hose assembly includes one coolant-supply hose with green bands and one coolant-return hose with red bands. At least one coolant-hose assembly is necessary for all cutting systems. Some cutting systems use two coolant-hose assemblies.

a. Connect the coolant-return hose with the red bands to the coolant-return fitting with the red band.

b. Connect the coolant-supply hose with the green bands to the coolant-supply fitting with the green band.

2. Connect the female cable connector on the 120 VAC power cable to the gas connect console from the plasma power supply.

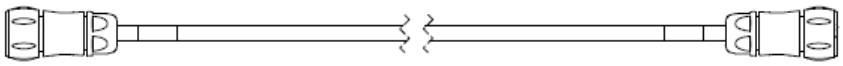

At least one 120 VAC power cable is necessary for all cutting systems. Some cutting systems use one 120 VAC power cable and one 220 VAC power cable.

3. Connect the female cable connector on the CAN cable to the gas connect console from the cooler.

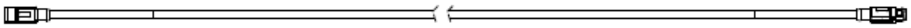

4. Connect the negative cable or cables to the coolant manifold in the gas connect console from the plasma power supply.

**Figure 29 -** Negative cable with strain relief

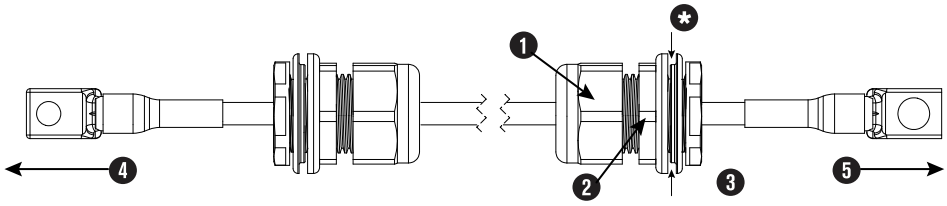


**1** Outer nut

**2** Strain relief nut

**3** Inner nut

**4** To plasma power supply

**5** To gas connect console

***** The sheet metal of the internal console panel intersects here.

At least one negative cable is necessary for all cutting systems. Some cutting systems use two negative cables.

a. Remove the inner nut from the strain relief assembly on each negative cable.

b. Before you put the negative cables through the holes in the sheet metal panel on the gas connect console, remove the two M3 hex nuts to remove the cover for the second strain-relief mounting hole.

c. Put the cable and strain relief nut for both negative cables through the holes in the sheet metal panel.

d. Put the inner nut from the strain relief assembly over the end of each negative cable.

e. Tighten the inner nut to the strain relief nut for each negative cable.

5. For ease of access, remove the top insulation panel by moving it horizontally before you connect the pilot-arc cable.

6. Connect the pilot-arc cable to the gas connect console from the plasma power supply.

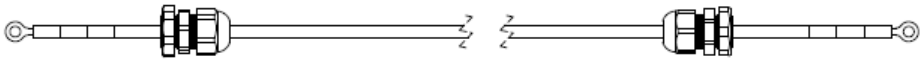

The strain relief nut on the pilot-arc cable is not necessary for this connection. Remove the nut from the cable and tighten the strain relief to the panel on the gas connect console.

**Figure 30 -** Connections complete for the gas connect console

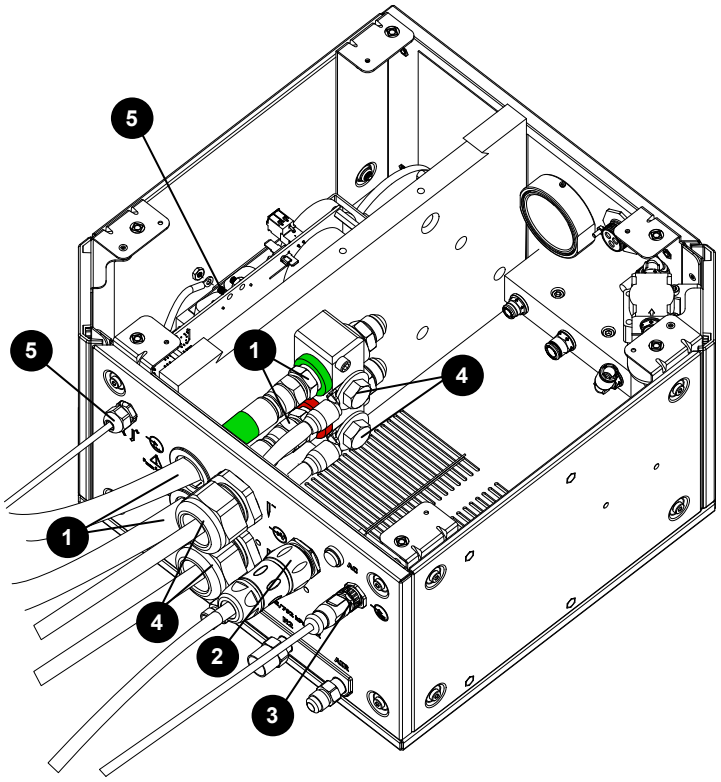

**Figure 30 -** Connections complete for the gas connect console (continued)

1. Coolant-supply (green) and coolant-return (red) hoses
2. Power cable, 120 VAC
3. CAN cable
4. Negative cables
5. Pilot-arc cable

# Connect the gas connect console (Core, CorePlus) to the TorchConnect console

Use this information to connect the Core or CorePlus gas connect console.

- If you have a VWI or OptiMix gas connect console, refer to Connect the gas connect console (VWI, OptiMix) to the TorchConnect console on page 123.

## Connect the pilot-arc and coolant assembly for Core or CorePlus

Use this information to connect the pilot-arc cable, coolant-return hose, and coolant-supply hose assembly to the Core or CorePlus gas connect console and the TorchConnect console.

**Figure 31 -** Pilot-arc and coolant assembly

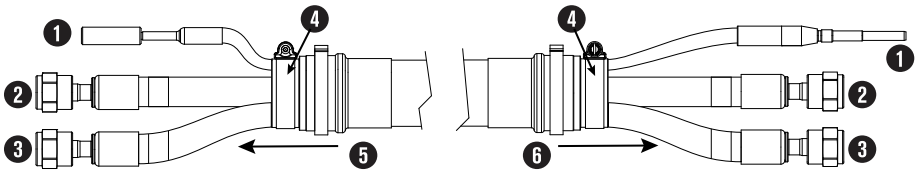


1. Pilot-arc cable, yellow
2. Coolant-return hose, red bands
3. Coolant-supply hose, green bands
4. Assembly coupler
5. To the gas connect console
6. To the TorchConnect console

For lengths, refer to Pilot-arc and coolant assemblies (Core, CorePlus) on page 426.

The images that follow show an example gas connect console. Your gas connect console could look different.

1. Connect the pilot-arc and coolant assembly to the gas connect console:

   a. Put the pilot-arc and coolant assembly through the console collar on the gas connect console.

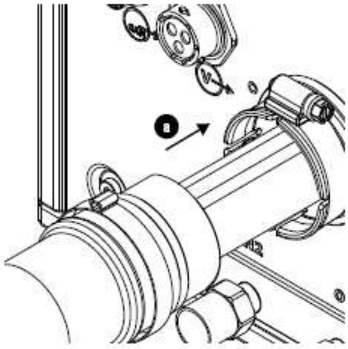


   b. For ease of access, remove the top insulation panel by moving it horizontally before you connect the pilot-arc cable.

   c. Connect the pilot-arc cable.

   d. Connect the coolant-return hose with the red bands to the coolant-return fitting with the red band.

   e. Connect the coolant-supply hose with the green bands to the coolant-supply fitting with the green band.

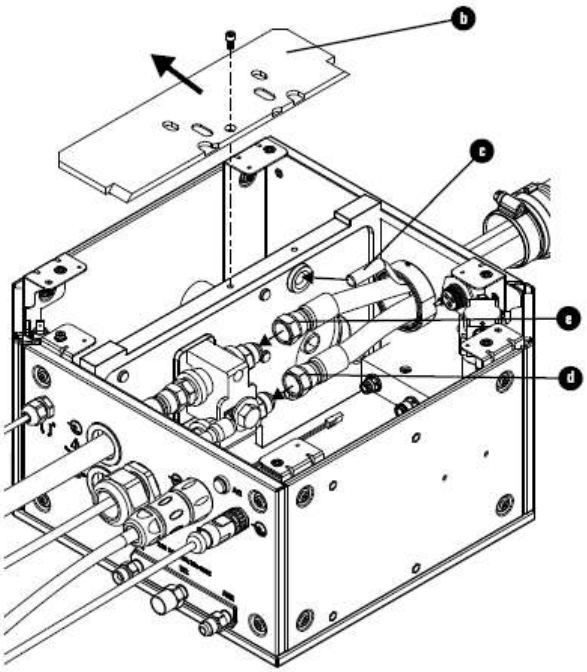

f. Remove the hose clamp from the pilot-arc and coolant assembly, put it in the groove on the console collar.

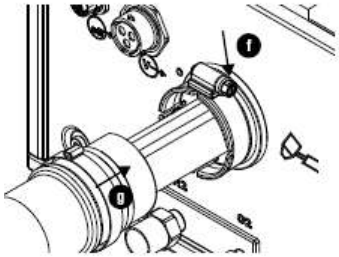

g. Put the assembly coupler on the console collar and tighten the hose clamp.

2. Connect the pilot-arc and coolant assembly to the TorchConnect console:

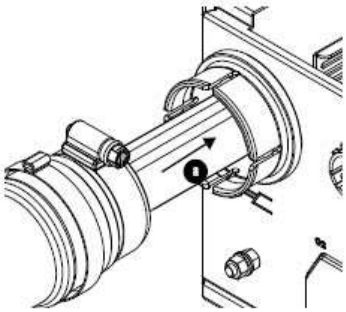

a. Put the pilot-arc and coolant assembly through console collar.

b. Connect the coolant-return hose with red bands to the coolant-return fitting with the red band.

c. Connect the coolant-supply hose with green bands to the coolant-supply fitting with the green band.

d. Connect the pilot-arc cable in the TorchConnect console.

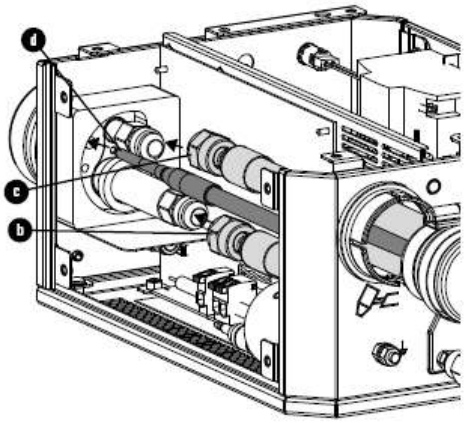

e. Remove the hose clamp from the pilot-arc and coolant assembly, put it in the groove on the

console collar.

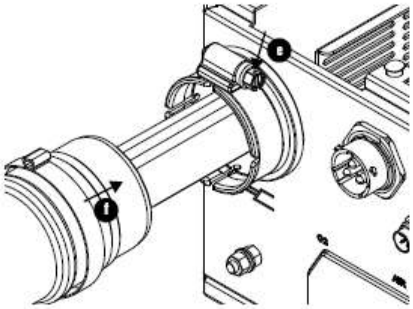

f. Put the coupler on the console collar and tighten the clamp.

## Connect the power, CAN, and 3-gas assembly for Core

Use this information to connect the power cable, CAN cable, oxygen hose, nitrogen hose, and air hose to the Core gas connect console and the TorchConnect console.

**Figure 32 -** Power, CAN, and 3-gas assembly between an example gas connect console and the TorchConnect console

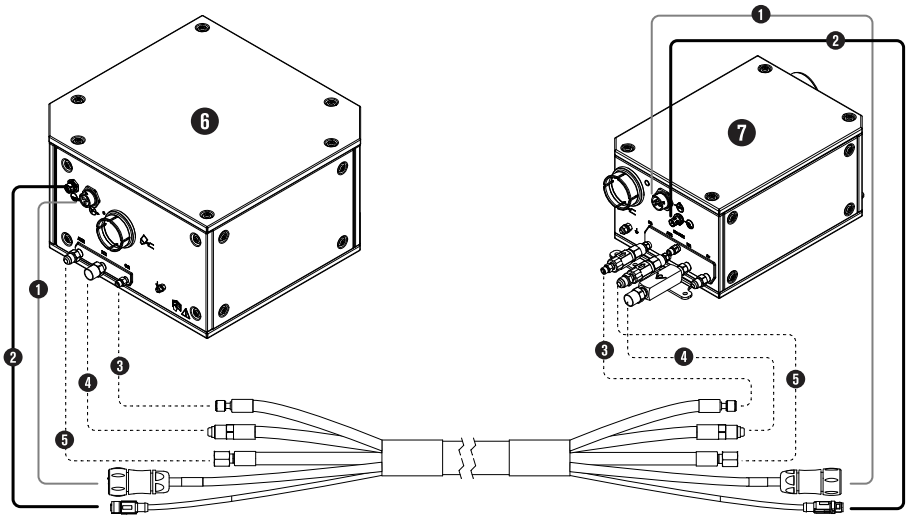

**1** Power cable

**2** CAN cable

**3** Oxygen hose, blue

**4** Nitrogen hose, black

**5** Air hose, black

**6** Core gas connect console

**7** TorchConnect console

For lengths, refer to Power, CAN, and 3-gas assemblies (Core) on page 426.

## Connect the power, CAN, and 4-gas assembly for CorePlus

Use this information to connect the power cable, CAN cable, oxygen hose, nitrogen hose, air hose, and argon hose to the CorePlus gas connect console and the TorchConnect console.

**Figure 33 -** Power, CAN, and 4-gas assembly between an example gas connect console and the TorchConnect console

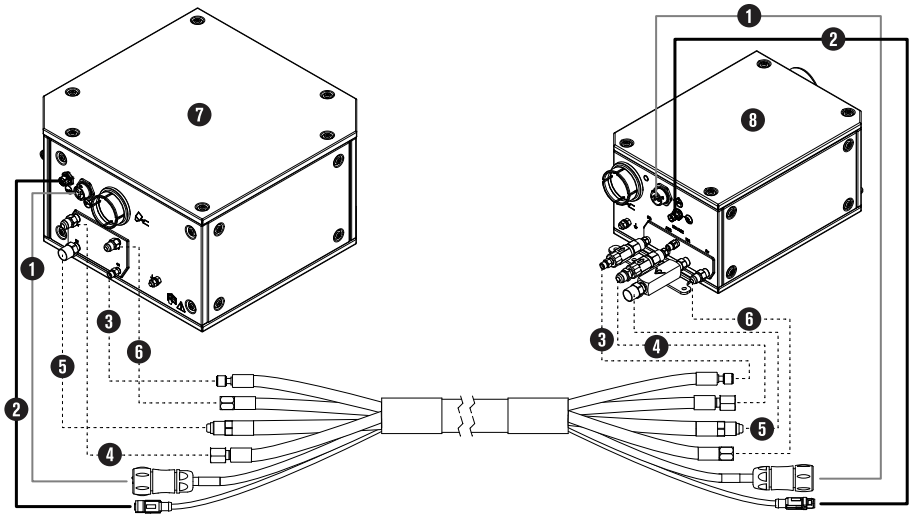


1 Power cable

2 CAN cable

3 Oxygen hose, blue

4 Air hose, black

5 Nitrogen hose, black

6 Argon hose, black

7 Gas connect console

8 TorchConnect console

For lengths, refer to Power, CAN, and 4-gas assemblies (CorePlus) on page 427.

# Connect the gas connect console (VWI, OptiMix) to the TorchConnect console

These installation steps are for the VWI or OptiMix gas connect console.

- If you have a Core or CorePlus gas connect console, refer to Connect the gas connect console (Core, CorePlus) to the TorchConnect console on page 118.

## Connect the pilot-arc, coolant, and shield-water assembly for VWI or OptiMix

Use this information to connect the pilot-arc cable, coolant-return hose, coolant-supply hose, and shield-water hose assembly to the VWI or OptiMix gas connect console and the TorchConnect console.

**Figure 34 -** Pilot-arc, coolant, and shield-water assembly

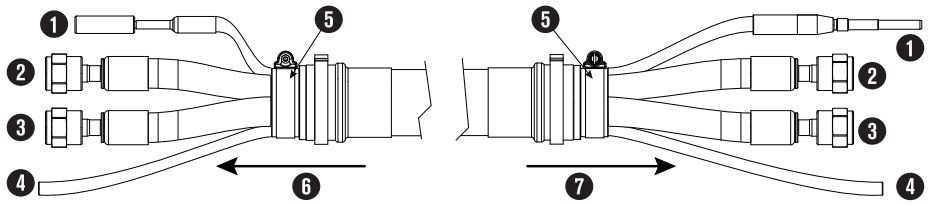


1 Pilot-arc cable, yellow

2 Coolant-return hose, red bands

3 Coolant-supply hose, green bands

4 Shield-water hose

5 Assembly coupler

6 To gas connect console

7 To TorchConnect console

For lengths, refer to Pilot-arc, coolant, and shield-water assemblies (VWI, OptiMix) on page 427.

The images that follow show an example gas connect console. Your gas connect console could look different.

1. Connect the pilot-arc, coolant, and shield-water assembly to the gas connect console:
   a. Put the pilot-arc, coolant, and shield-water assembly through the console collar on the gas connect console.

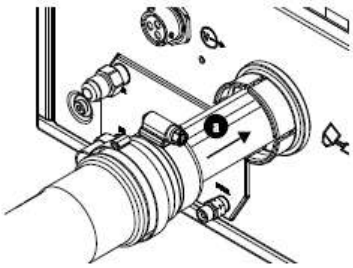

b. For ease of access, remove the top insulation panel by moving it horizontally before you connect the pilot-arc cable.

c. Connect the pilot-arc cable.

d. Connect the coolant-return hose with the red bands to the coolant-return fitting with the red band.

e. Connect the coolant-supply hose with the green bands to the coolant-supply fitting with the green band.

f. Connect the shield-water hose.

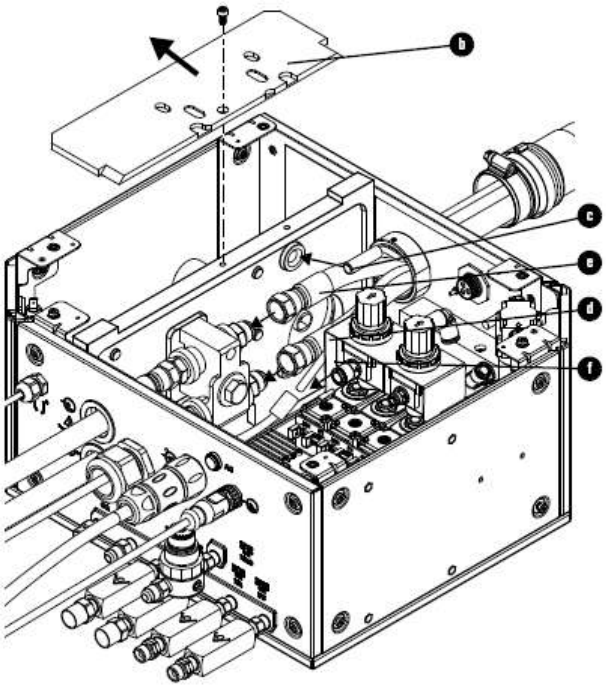


g. Remove the hose clamp from the pilot-arc, coolant, and shield-water assembly, put it in the groove on the console collar.

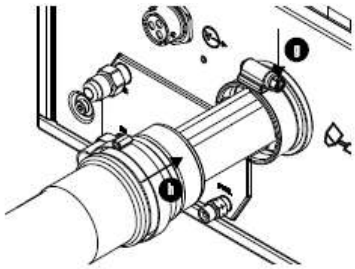

h. Put the assembly coupler on the console collar and tighten the hose clamp.

2. Connect the pilot-arc, coolant, and shield-water assembly to the TorchConnect console:

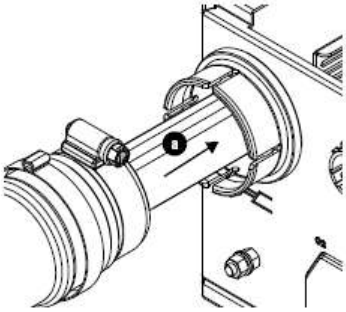

a. Put the pilot-arc, coolant, and shield-water assembly through the console collar on the TorchConnect console.

b. Put the shield-water hose connector in the push-to-connect fitting, push until it stops, approximately 13 mm (0.5 inch).

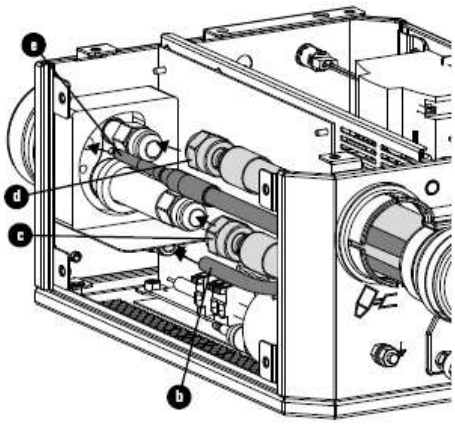

c. Connect the coolant-return hose with the red bands to the coolant-return fitting with the red band.

d. Connect the coolant supply hose with the green bands to the coolant-supply fitting with the green band.

e. Connect the pilot-arc cable.

f. Remove the hose clamp from the pilot-arc, coolant, and shield-water assembly, put it in the groove on the console collar.

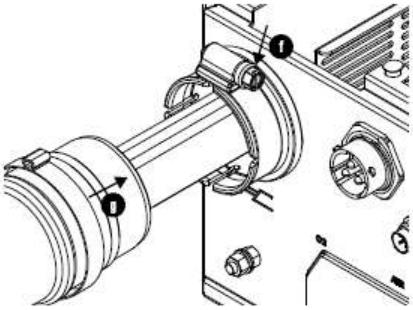

g. Put the assembly coupler on the console collar and tighten the hose clamp.

## Connect the power, CAN, and 5-gas assembly for VWI or OptiMix

Use this information to connect the power cable, CAN cable, oxygen hose, air hose, argon hose, nitrogen hose, and $H_2$-mix or F5 hose to the VWI or OptiMix gas connect console and TorchConnect console.

**Figure 35 -** Power, CAN, and 5-gas hose assembly

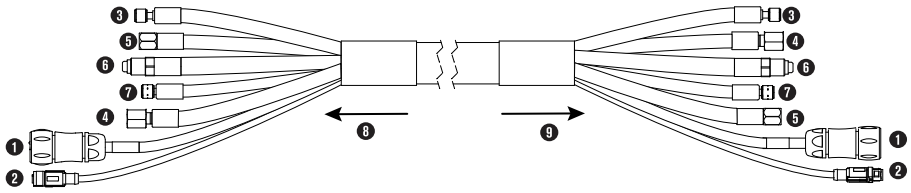

**1** Power cable

**2** CAN cable

**3** Oxygen hose, blue

**4** Air hose, black

**5** Argon hose, black

**6** Nitrogen hose, black

**7** $H_2$-mix or F5 hose, red

**8** To the gas connect console

**9** To the TorchConnect console

For lengths, refer to Power, CAN, and 5-gas assemblies (VWI, OptiMix) on page 427.

**Figure 36 -** Power, CAN, and 5-gas hose assembly between an example gas connect console and the TorchConnect console

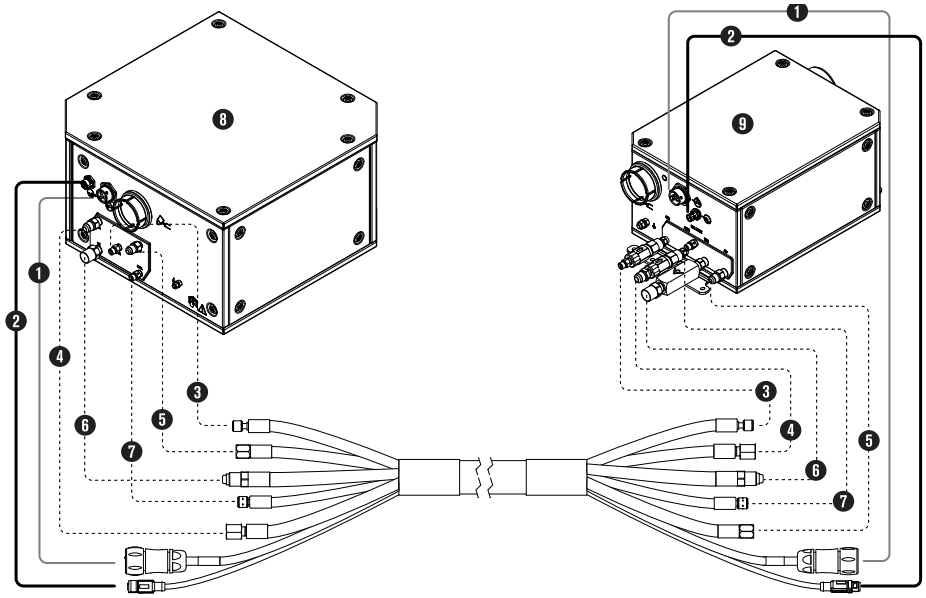


## Supply gas installation

Comply with all safety requirements when you install and connect the supply gases for the plasma cutting system. For example, use flashback arrestors, release gases with an exhaust system, and tighten hoses as specified for different hose dimensions.

It is very important to comply with safety requirements if you use hydrogen or oxygen.

## ⚠ WARNING

### HYDROGEN GAS CAN CAUSE AN EXPLOSION OR FIRE

Hydrogen is a flammable gas that can cause an explosion or fire if it is not removed.

Keep flames away from cylinders and hoses that contain hydrogen. Keep flames and sparks away from the torch when using hydrogen as a plasma gas.

Consult your local safety, fire, and building code requirements for the storage and use of hydrogen.

Hypertherm recommends that you install an exhaust ventilation system to remove the hydrogen-enriched atmosphere that can collect when hydrogen is used as the plasma gas for cutting.

Flashback arrestors are REQUIRED to stop the spread of fire to the supply gases (unless a flashback arrestor is not available for a specific gas or pressure).

As an installer or user, you must supply the exhaust ventilation and flashback arrestors for your cutting system. You can get them from your cutting machine supplier.

## ⚠ WARNING

### OXYGEN GAS CAN CAUSE A FIRE HAZARD

If you use oxygen as the plasma gas for cutting, it can cause a potential fire hazard due to the oxygen-enriched atmosphere that collects. A fire can occur if oxygen is not removed.

Hypertherm recommends that you install an exhaust ventilation system to remove the oxygen-enriched atmosphere that can collect when oxygen is used as the plasma gas for cutting.

Flashback arrestors are REQUIRED to stop the spread of fire to the supply gases (unless a flashback arrestor is not available for a specific gas or pressure).

As an installer or user, you must supply the exhaust ventilation and flashback arrestors for your cutting system. You can get them from your cutting machine supplier.

## ⚠ WARNING

**INCORRECT SUPPLY-GAS CONNECTIONS CAN CAUSE AN EXPLOSION OR FIRE**

An explosion or fire can occur if a supply-gas hose is connected to the wrong port on a gas connect console.

NEVER connect a supply gas to a hose, connection, or fitting that is not designed for that gas type or pressure.

## ⚠ WARNING

**MISSING CHECK VALVES CAN CAUSE AN EXPLOSION OR FIRE**

An explosion or fire can occur if the cutting system is operated without check valves.

Never remove a check valve.

## *NOTICE*

**PTFE TAPE CAN CAUSE CLOGGED VALVES, REGULATORS, AND TORCHES**

Never use PTFE tape on any joint preparation. Use only a liquid or paste thread sealant on male thread ends.

## NOTICE

**INCORRECT HOSES, CONNECTIONS, OR FITTINGS CAN CAUSE DAMAGE AND BAD PERFORMANCE**

Noncompliant hoses, hose connections, or hose fittings can crack or leak. Incorrect fittings can cause malfunctions with the internal valves because contaminants can enter the valves through damaged or loose fittings.

All hoses, hose connections, and hose fittings used for supply-gas plumbing must be designed for use with the appropriate gas and pressure rating. NEVER connect a supply gas to a hose, connection, or fitting that is not designed for that gas type or pressure. A replacement hose, connection, or fitting must meet all applicable regulations and codes.

## NOTICE

**INCORRECT SUPPLY-GAS FITTINGS CAN CAUSE VALVES TO MALFUNCTION**

If you alter or replace the fittings, it can cause the internal valves to malfunction if particulates get inside.

Do not change or replace the supply-gas fittings on the gas connect console.

## NOTICE

**INCORRECT SUPPLY-GAS CONNECTIONS CAN CAUSE CUTTING SYSTEM DAMAGE**

Incorrect connections can reduce the life of consumables and cause damage to the torch head, torch receptacle, torch leads, and torch connect console.

NEVER connect a supply gas to a hose, connection, or fitting that is not designed for that gas type or pressure.

## NOTICE

**INCORRECT SUPPLY-GAS CONNECTIONS CAN CAUSE BAD PERFORMANCE**

Cutting system performance can be bad if a supply-gas hose is connected to the wrong port on a gas connect console.

NEVER connect a supply gas to a hose, connection, or fitting that is not designed for that gas type or pressure.

## NOTICE

**DIRTY, OILY AIR CAN CAUSE DAMAGE TO THE AIR FILTER BOWL**

Some air compressors use synthetic lubricants that contain esters. Esters can damage the polycarbonates in the air filter bowl.

Add additional gas filtration if necessary.

## NOTICE

**INCORRECT GAS PRESSURES CAN CAUSE BAD PERFORMANCE**

Gas leaks or pressure and flow rates that are outside of recommended ranges can cause problems with system performance, result in bad cut quality, and shorten the life of consumables.

If the quality of the gas is bad or if the pressure setting is incorrect, it can decrease cut quality, cut speed, and cut thickness capabilities.

Make sure the incoming gas pressure aligns with system specifications.

As an installer or user, you must supply these items for your cutting system:

- High-quality gas regulators
- Supply gas plumbing
- Supply gases

The items that you supply must comply with all minimum requirements and must be installed by an approved technician.

**Table 19 -** Torque specifications

| 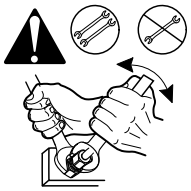 | Gas or water hose dimensions | N·m | lbf·in | lbf·ft |
|---|---|---|---|---|
| | 10 mm (3/8 inch) or less | 8.5 – 9.5 | 75 – 84 | 6.25 – 7 |
| | 12 mm (1/2 inch) | 16.3 – 19.0 | 144 – 168 | 12 – 14 |
| | 25 mm (1 inch) | 54.2 – 88.1 | 480 – 780 | 40 – 65 |

## Install gas regulators

Complete these steps to install gas regulators for the plasma cutting system.

1. Install the gas regulators **before** the supply gas plumbing.

   For installation steps, refer to the instruction manual for the gas regulator.

2. Put a gas regulator 3 meters (10 feet) or less from the gas connect console, or adjust inlet gas pressures to be in the tolerances specified in Process-gas requirements for all gas connect consoles on page 48.

3. After installation, fully pressurize the system, and look for gas leaks.

   Your system installer or a licensed plumber can do this for you.

4. Make sure that all gas fittings are tightened to the correct torque specifications.

   Refer to Supply gas installation on page 127.

## Connect supply gases to Core or CorePlus

Make sure that the supply gas lines are correctly connected to the Core or CorePlus gas connect console.

If you have a VWI or OptiMix gas connect console, refer to Connect the supply gases and shield water to VWI or OptiMix on page 134.

Before you begin:

- Make sure that you have the correct supply gas hoses before you connect them.
- Hypertherm recommends a minimum internal diameter of 10 mm (0.375 inch) for supply-gas hoses that are 76 m (250 feet) or less.

**Table 20 -** Recommended dimensions for gas fittings

| Fitting type | Dimensions |
|---|---|
| $N_2$ / Ar | 5/8 inch – 18, RH internal (inert gas) "B" |
| Air | 9/16 inch – 18, JIC #6 |
| F5 / $H_2$ | 9/16 inch – 18, LH (fuel gas) "B" |
| $O_2$ | 9/16 inch – 18, RH (oxygen) |

1. Tighten all gas hose fittings to the correct torque specifications.

   Refer to Supply gas installation on page 127.

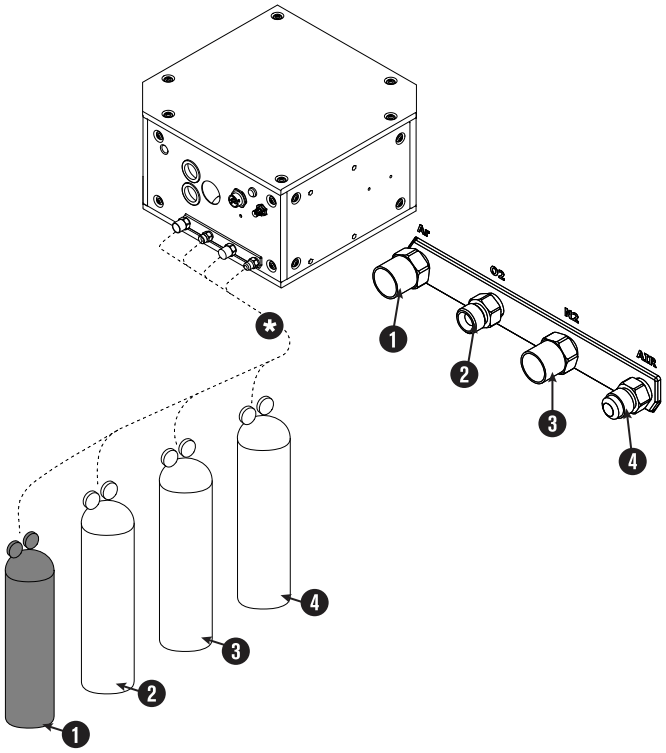


**1** Argon (Ar)

**2** Oxygen ($O_2$)

**3** Nitrogen ($N_2$)

**4** Air

***** Regulators

For the best results, make sure that the cutting system is prepared to operate and the gases are flowing when you select the gas regulator settings. This is almost equivalent to doing a test for gas preflow and cutflow.

2. After installation is complete, fully pressurize the system, and look for gas leaks.

   Your system installer or a licensed plumber can do this for you.

## Connect the supply gases and shield water to VWI or OptiMix

Make sure that the supply gas lines are correctly connected to the VWI or OptiMix gas connect console. Connect the shield water if you are using it.

If you have a Core or CorePlus gas connect console, refer to Connect supply gases to Core or CorePlus on page 132.

Before you begin:

- Make sure that you have the correct supply gas hoses before you connect them.
- Hypertherm recommends a minimum internal diameter of 10 mm (0.375 inch) for supply-gas hoses that are 76 m (250 feet) or less.

**Table 21 -** Recommended dimensions for gas fittings

| Fitting type | Dimensions |
|---|---|
| $N_2$ / Ar | 5/8 inch – 18, RH internal (inert gas) "B" |
| Air | 9/16 inch – 18, JIC #6 |
| F5 / $H_2$ | 9/16 inch – 18, LH (fuel gas) "B" |
| $O_2$ | 9/16 inch – 18, RH (oxygen) |

1. Tighten all gas hose fittings to the correct torque specifications.

   Refer to Supply gas installation on page 127.

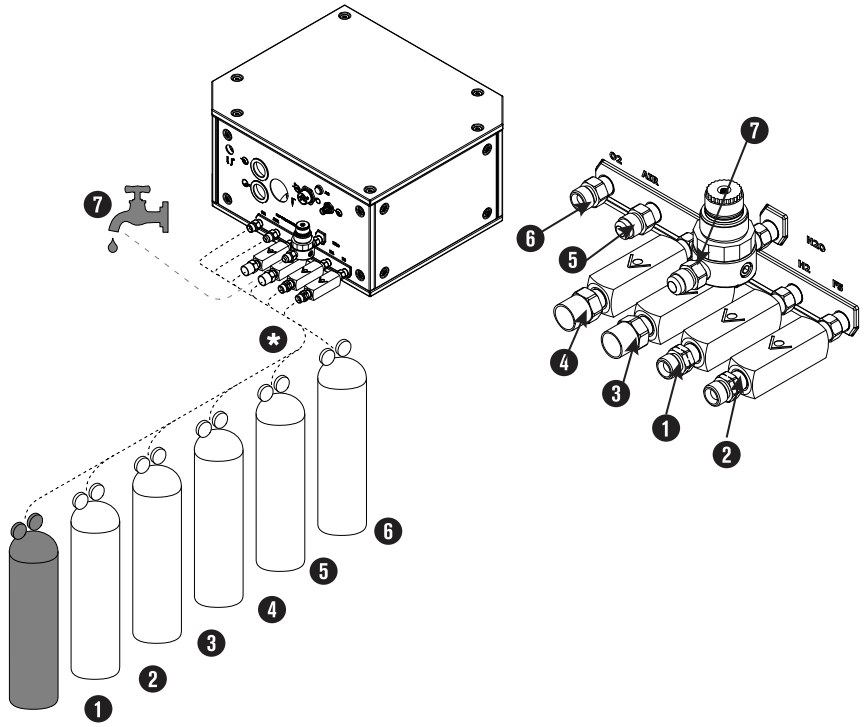

1 Hydrogen ($H_2$)

2 F5

3 Argon (Ar)

4 Nitrogen ($N_2$)

5 Air

6 Oxygen ($O_2$)

7 Shield water ($H_2O$) only for VWI and OptiMix

* Regulators

For the best results, make sure that the cutting system is prepared to operate and the gases are flowing when you select the gas regulator settings. This is almost equivalent to doing a test for gas preflow and cutflow.

2. **Optional:** Connect the shield water, if necessary.

   - ☐ If you use shield water, refer to Shield-water requirements (VWI and OptiMix) on page 55.
   - ☐ The temperature range for cutting system operation with shield water is decreased to > 0°C to 40°C (> 32°F to 104°F).

3. After installation is complete, fully pressurize the system, and look for gas leaks.

   Your system installer or a licensed plumber can do this for you.

# Install the torch-lead assembly to the torch receptacle

Use this information to install the torch-lead assembly to the torch receptacle. For easier installation, make sure that the connections are done in the same sequence as these steps.

1. Unwind approximately 2 meters (6.5 feet) of the torch-end of the torch-lead assembly.
2. Put the torch collar on the connector-end of the torch.
3. Put the torch mounting sleeve on the torch-end of the torch-lead assembly.

   Adjust the mounting sleeve as necessary for good access to the connector ends.

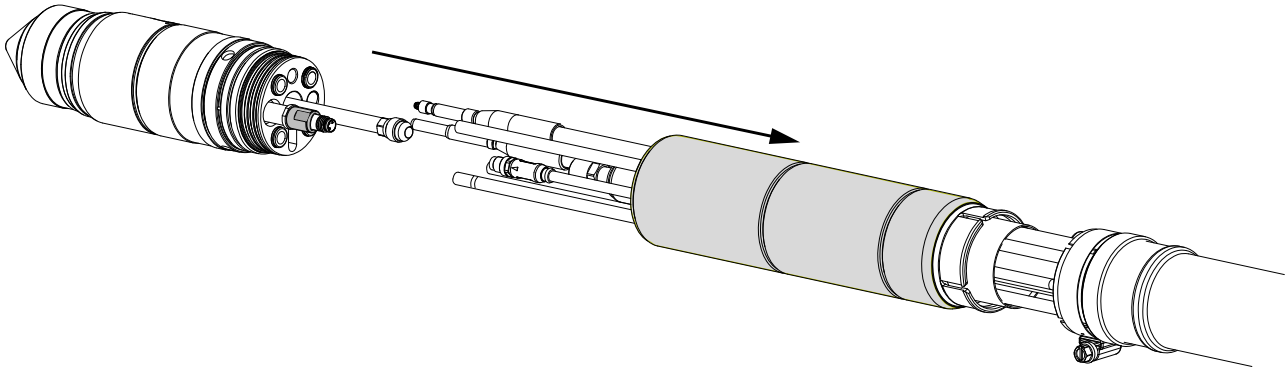

4. Align the connectors in the torch-lead assembly and the torch receptacle.

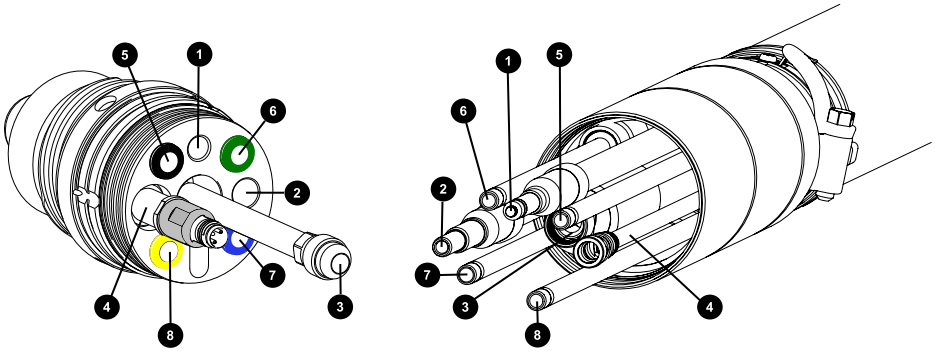


**1** Pilot arc

**2** Ohmic

**3** Coolant return

**4** Plasma valve

**5** Plasma Line A, black

**6** Coolant supply, green

**7** Shield gas, blue

**8** Plasma Line B, yellow

Good alignment keeps twisted connections to a minimum. Twisted connections can cause gas or coolant restrictions that decrease the life of the consumables or cause bad cut quality.

5. Connect the connectors in the torch-lead assembly and the torch receptacle:

   a. Connect the pilot arc.

   Keep this connection loose for now. You can fully tighten it **after** the coolant-return hose installation is complete. If you fully tighten it before the coolant-return, other connections will be difficult. Use your fingers to tighten the connection, do not use tools.

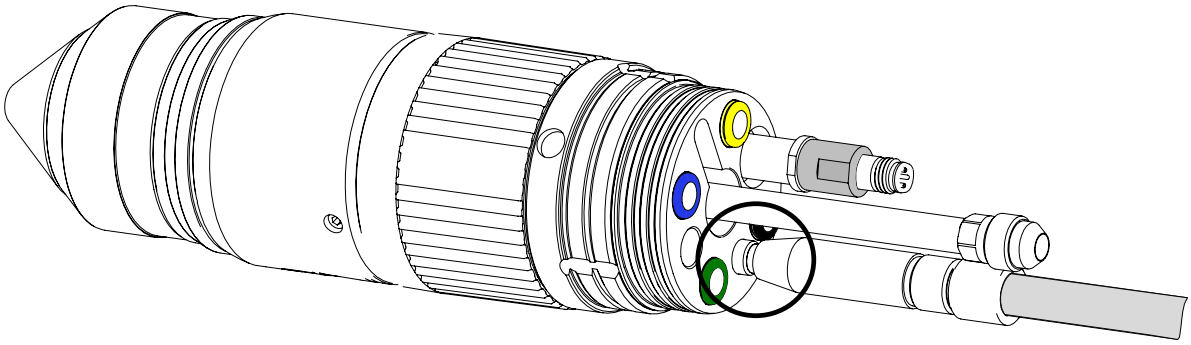

   b. Connect the ohmic cable.

   Keep this connection loose for now. You can fully tighten it **after** the coolant-return hose installation is complete. If you fully tighten it before the coolant-return, other connections will be difficult. Use your fingers to tighten the connection, do not use tools.

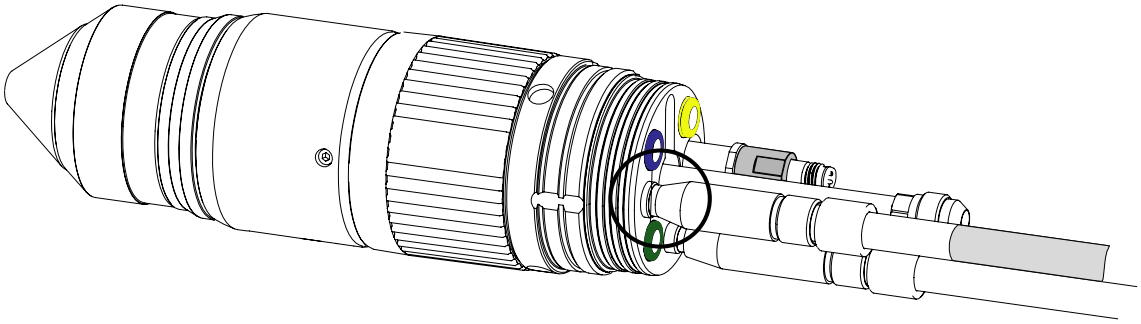

   c. Install the coolant-return hose and use two wrenches to tighten the nut to 16.3 N·m –19.0 N·m (144 lbf·in – 168 lbf·in).

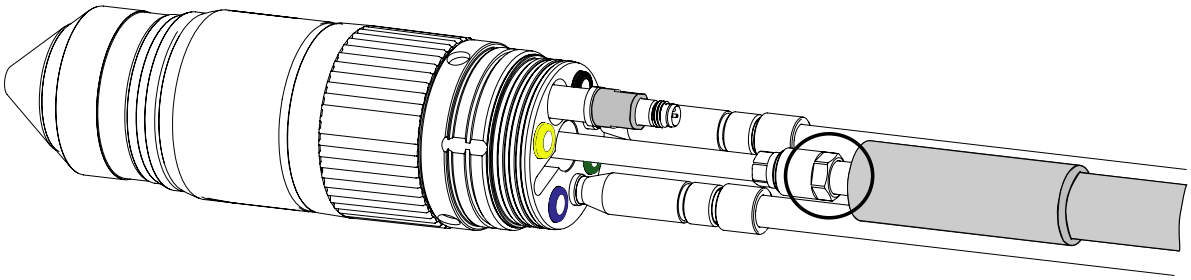

d. After you install the coolant-return hose, fully tighten the pilot arc and ohmic cable connectors.

Use your fingers to tighten the connection, do not use tools.

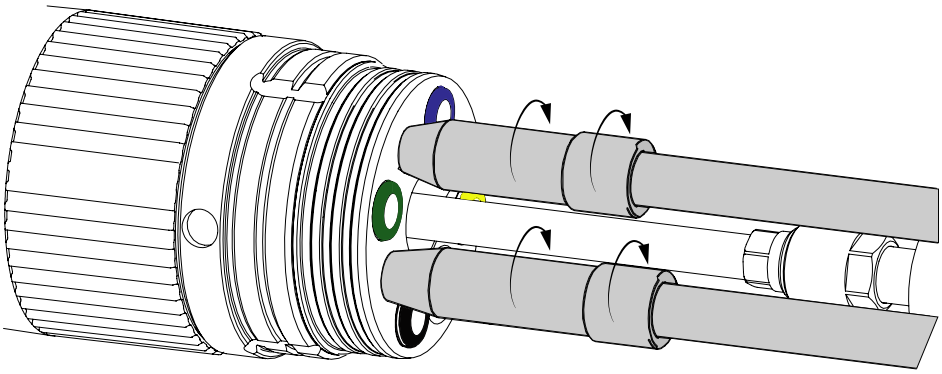

e. Connect the plasma valve.

Use your fingers to tighten the connection, do not use tools.

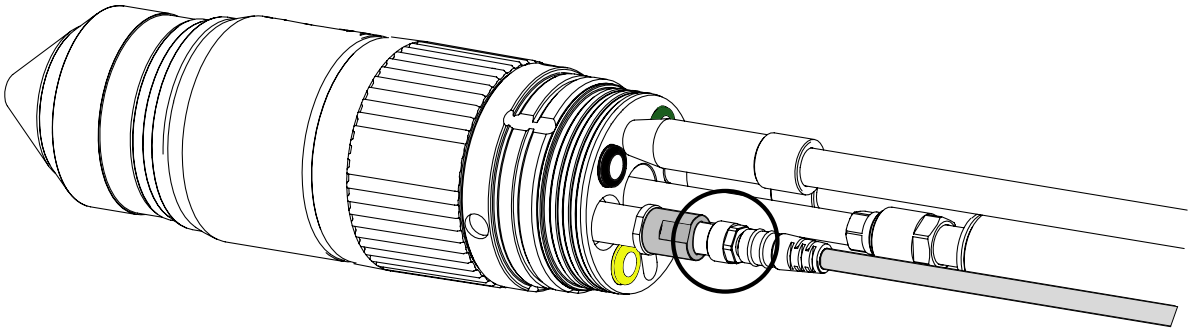

f. Push the Plasma Line A hose in the connector until it stops, approximately 13 mm (0.5 inch).

This is a push-to-connect fitting. Make sure the hose is fully inserted and the insertion mark is no longer visible.

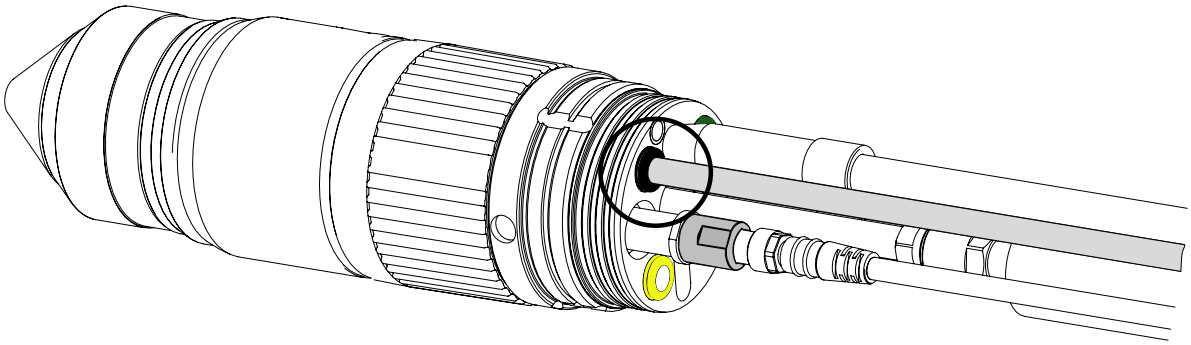

g. Push the coolant-supply hose in the connector until it stops, approximately 13 mm (0.5 inch).

This is a push-to-connect fitting. Make sure the hose is fully inserted and the insertion mark is no longer visible.

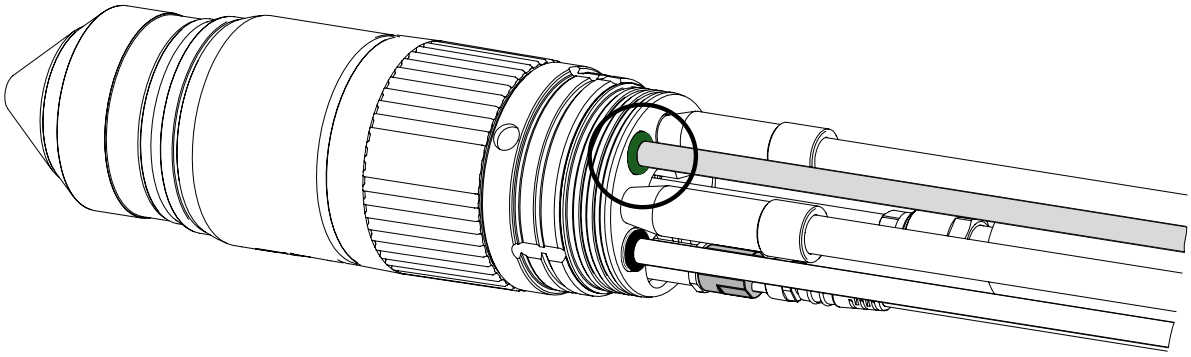

h. Push the shield-gas hose in the connector until it stops, approximately 13 mm (0.5 inch).

This is a push-to-connect fitting. Make sure the hose is fully inserted and the insertion mark is no longer visible.

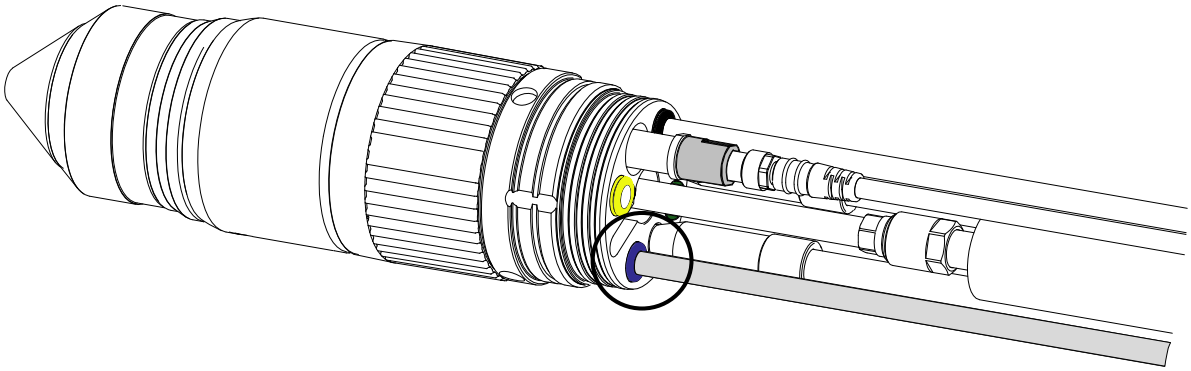

i. Push the Plasma Line B hose in the connector until it stops, approximately 13 mm (0.5 inch) .

This is a push-to-connect fitting. Make sure the hose is fully inserted and the insertion mark is no longer visible.

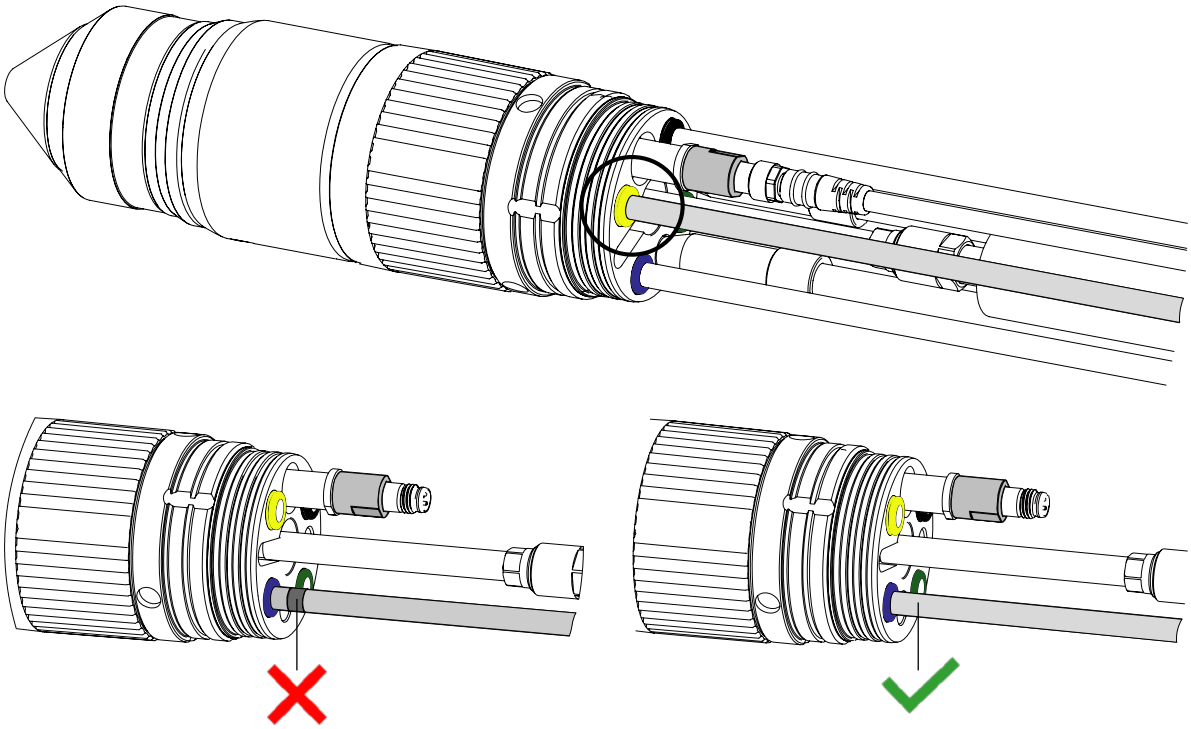

6. Install the torch mounting sleeve:
   a. Move the torch mounting sleeve in the direction of the torch.
   b. Use your hands to tighten the torch mounting sleeve connection.

A spanner wrench is included in all of the consumable parts kits. Refer to Consumable starter kits on page 420. Do **not** overtighten the torch mounting sleeve if you use the spanner wrench to keep the torch stable during installation of the mounting sleeve.

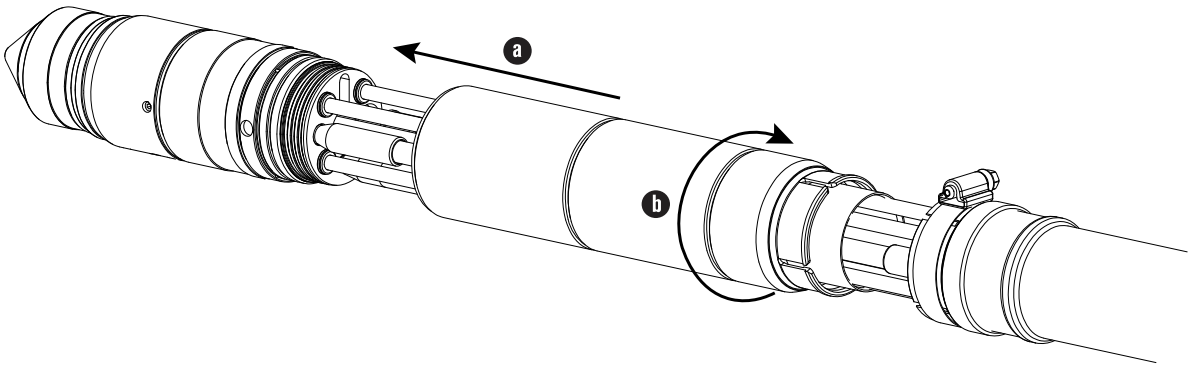


7. Put the collar in the correct position on the torch-end of the torch lead:
   a. Move the collar in the direction of the torch-end of the torch-lead assembly.

b. Tighten the hose clamp that holds the collar in position.

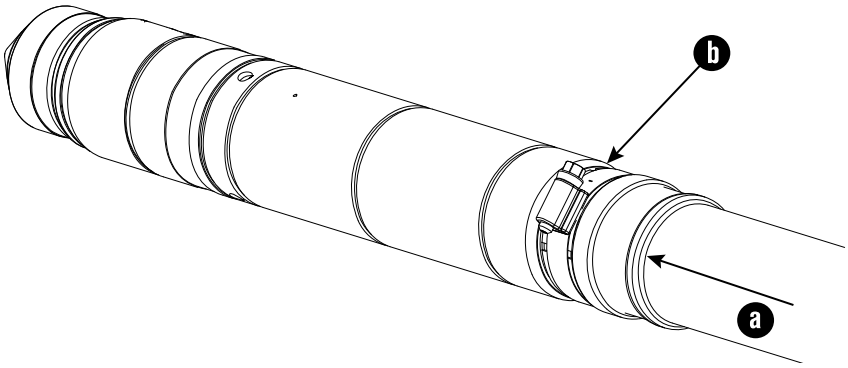


## Connect the torch lead to the TorchConnect console

Make sure to use the correct lead lengths for the best cut quality and longest consumable life.

### *NOTICE*

**FOR THE BEST CUT QUALITY AND CONSUMABLE LIFE USE THE CORRECT LEAD LENGTHS**

Cut quality and the lifespan of consumables will be decreased if you change the lead lengths.

The manufactured lengths of torch and console leads are critical for system performance. Never change the lengths of leads.

**Figure 37 -** Torch-lead assembly

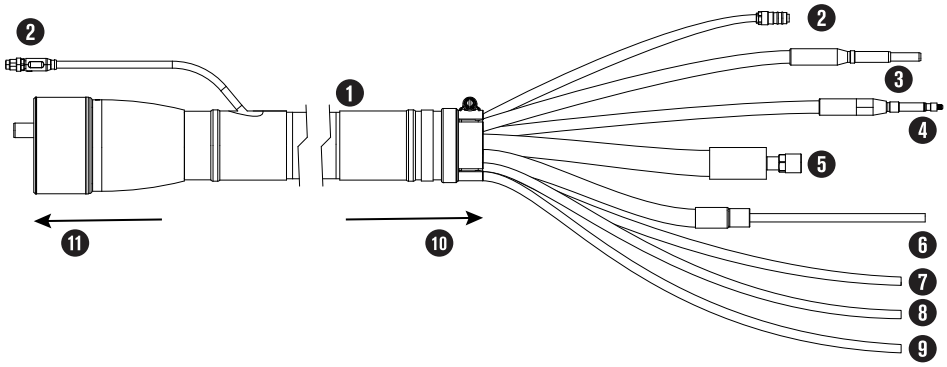


**1** Protective sleeve

**2** Plasma valve cable

**3** Ohmic lead

**Figure 37 -** Torch-lead assembly (continued)

**4** Pilot arc lead

**5** Coolant return hose (red)

**6** Coolant supply hose (green)

**7** Shield gas hose

**8** Plasma gas hose A

**9** Plasma gas hose B

**10** To the torch

**11** To the TorchConnect console

The 6 meter (20 feet) lead is compatible only with gas assemblies that are 7.5 meters (24.6 feet) or less. For lengths, refer to Torch leads on page 431.

1. Adjust the EasyConnect™ torch-lead assembly so that the connectors in the torch-lead assembly align with the related receptacles in the TorchConnect console.

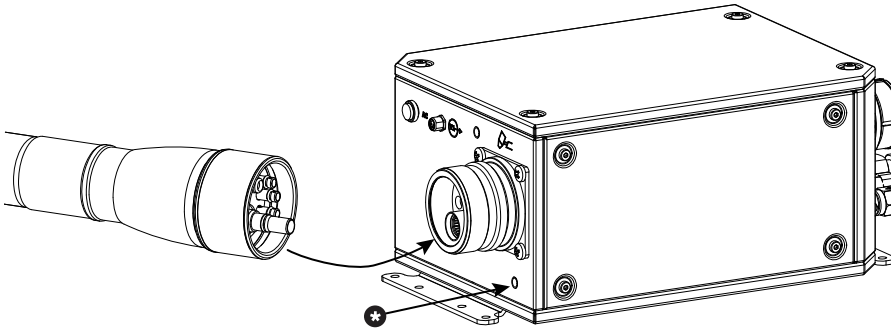

2. **Optional:** If you use a third-party ohmic circuit, remove the plug (*) to get access to the ohmic wire.
3. Connect the torch-lead assembly to the TorchConnect console:

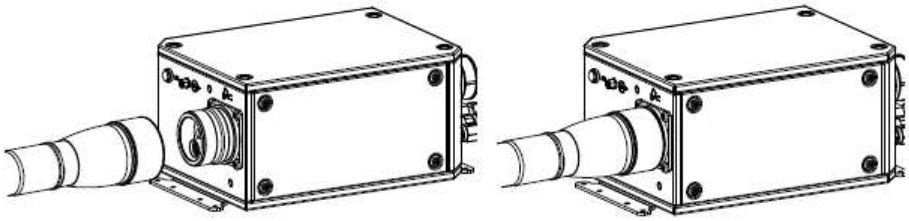

Use your hands to tighten the coupler on the torch-lead assembly. Do **not** use tools.

4. Connect the plasma valve cable to its connector.

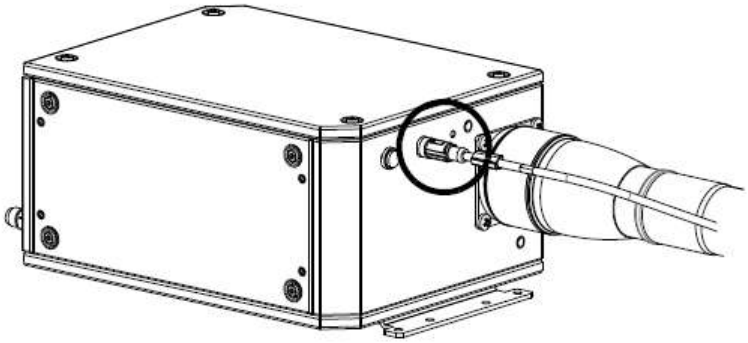

Use your hands to tighten the connector. Do **not** use tools.

## Remove the torch and consumable parts

It can be necessary to remove the torch and consumable parts for replacement, maintenance, or troubleshooting.

**WARNING**

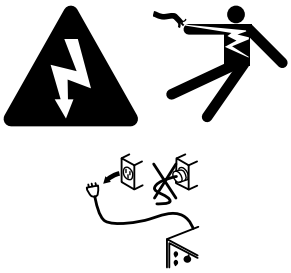

**ELECTRIC SHOCK CAN KILL**

Disconnect electric power before doing installation or maintenance. The line-disconnect switch must STAY in the OFF position until all of the installation or maintenance steps are complete. Refer to the *Safety and Compliance Manual (80669C)* for more safety information.

## NOTICE

**A LOOSE OR OVERTIGHTENED ELECTRODE CAN CAUSE DAMAGE TO THE TORCH**

If you do not correctly install and tighten the electrode, torch damage can occur.

A tool is necessary to correctly install and tighten the torch electrode. Do not use your hands. Hypertherm recommends tightening the electrode to a torque value of 2.3 N·m – 2.8 N·m (20 lbf·in – 25 lbf·in).

- The torch head in the XPR torch-assembly kit has 460 A mild steel consumable parts installed on it. Refer to Consumable starter kits on page 420 if necessary.
- For information about how to select consumables for your cutting or marking applications, refer to the *XPR Cut Charts Instruction Manual (809830)*.

1. Remove the power from the cutting system:
   a. Set the line-disconnect switch to the OFF position.
   b. Make sure that the power-indicator LED is **not** illuminated on the plasma power supply or other system components.
2. Loosen the torch coupler nut to release the torch from the torch receptacle.

   The torch and consumables can be hot. Put on gloves to prevent burns.
3. Put the torch and torch receptacle on a surface that is:
   - ☐ Clean
   - ☐ Dry
   - ☐ Oil-free
4. Remove the consumables as shown.

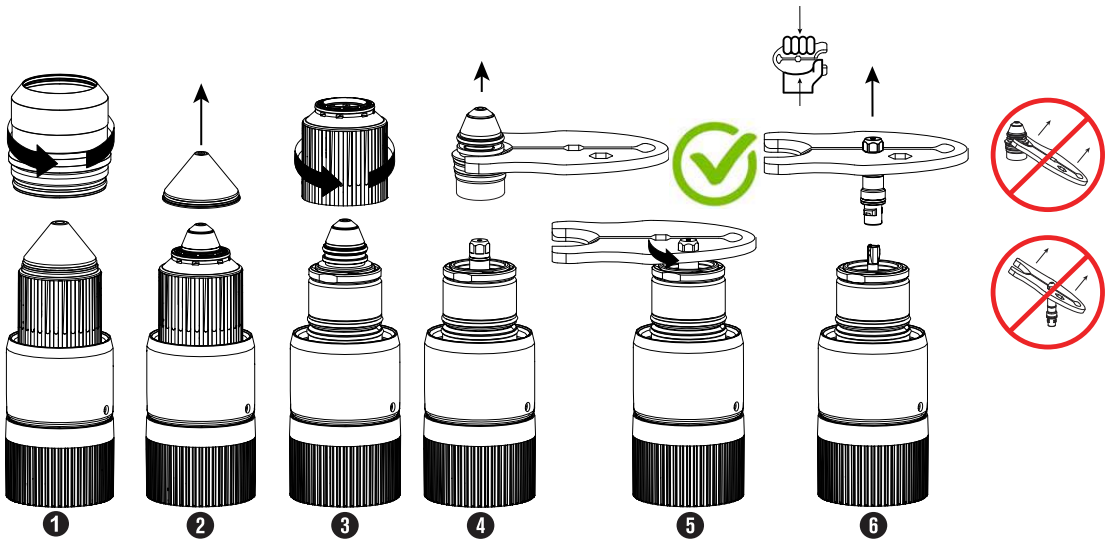


5. Use the consumable tool to turn the electrode counterclockwise.
6. Hold the tool tightly and pull straight out to correctly remove the electrode.
7. Put the consumables on a surface that is:
   - ☐ Clean
   - ☐ Dry
   - ☐ Oil-free

## Install the torch into the torch receptacle

Make sure that the torch is correctly installed in the torch receptacle.

**Figure 38 -** Torch receptacle connections

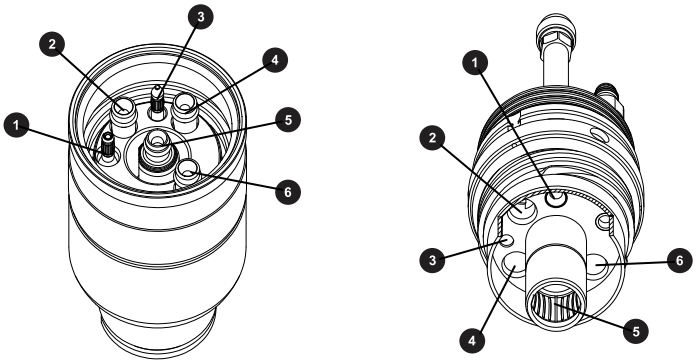

**Figure 38 -** Torch receptacle connections (continued)

**1** Pilot arc

**2** Coolant return

**3** Ohmic

**4** Shield gas

**5** Coolant supply

**6** Plasma gas

1. Apply a thin layer of silicone lubricant to the four O-rings that are inside of the torch body.

   Do **not** apply silicone to the brass electrical connectors.

   Make sure that the O-rings are shiny. However, too much lubricant can prevent gas flow. Remove unwanted lubricant if found.

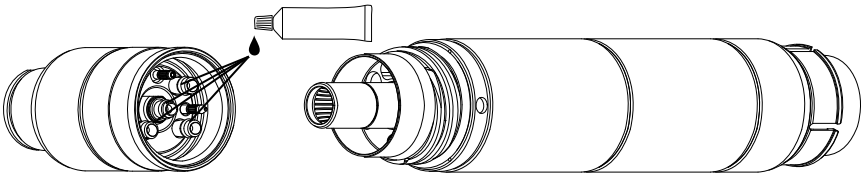

2. Install the torch in the torch receptacle:

   a. Turn the torch body up with light force until you feel it engage into position in the receptacle.

   b. Use your hands to tighten the torch-coupler nut until the coupler nut cannot turn.

      Do **not** use tools.

3. Make sure that the torch body is fully installed in the torch receptacle.

Make sure that there is no space between the torch body and torch receptacle.

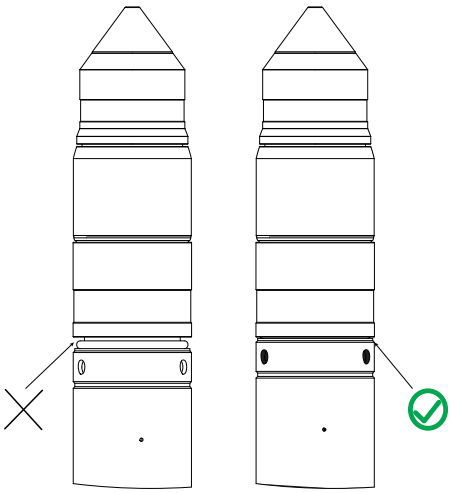

# Install the torch in the torch mounting bracket

Install the torch in the torch mounting bracket. Make sure it is level in all directions, then tighten the screws on the bracket.

Before you begin:

- You must connect the torch-lead assembly to the torch receptacle. Refer to Install the torch-lead assembly to the torch receptacle on page 136.
- You must remove the consumables from the torch. Refer to Remove the torch and consumable parts on page 143.
- You must install the torch into the torch receptacle. Refer to Install the torch into the torch receptacle on page 145.
- As the installer or user, you must supply the torch mounting bracket for your cutting system.
  - Select one that complies with the requirements in Torch mounting bracket requirements on page 70.
  - Mounting brackets are available from Hypertherm. Refer to Torch bracket on page 419.
- The XPR torch mounting sleeve is larger than the HPR torch mounting sleeve. Modification or replacement of an HPR mounting sleeve is necessary before you install an XPR torch.

1. Remove the power from the cutting system:
   a. Set the line-disconnect switch to the OFF position.
   b. Make sure that the power-indicator LED is **not** illuminated on the plasma power supply or other system components.
2. Install the torch mounting bracket onto the torch lifter.

   Refer to the instruction manual for the torch lifter for information about how to install the torch mounting bracket in the torch lifter.
3. Insert the torch, with the attached torch-lead assembly, into the torch mounting bracket, as shown.

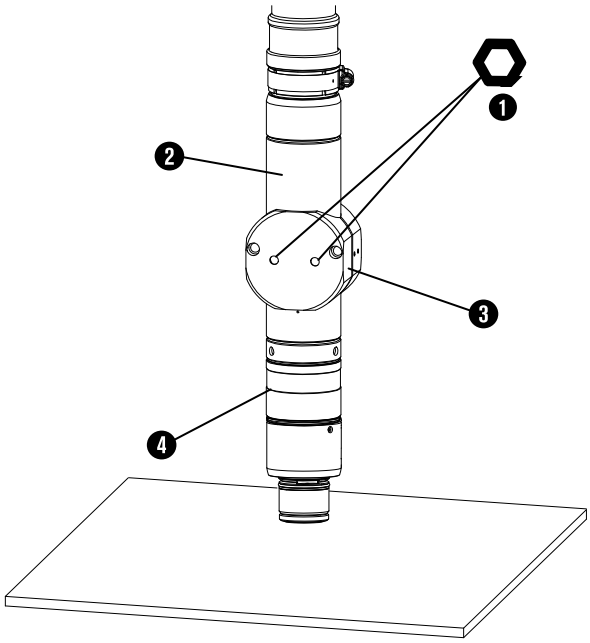


**1** 1.8 mm (3/16 inch)

**2** Lower torch sleeve

**3** Torch mounting bracket 5.72 cm (2.25 inches)

**4** Torch receptacle

4. Move the torch assembly so that the torch mounting bracket is around the lower part of the torch sleeve and does not touch the torch receptacle.

   Make sure that the torch mounting bracket is as low as possible on the torch sleeve without touching the torch receptacle. This position can keep vibration at the torch tip to a minimum.

5. Make sure that the torch is level (at a 0° angle) in all directions, as shown.

   You can use a digital level to measure alignment for standard-position cutting, marking, and piercing.

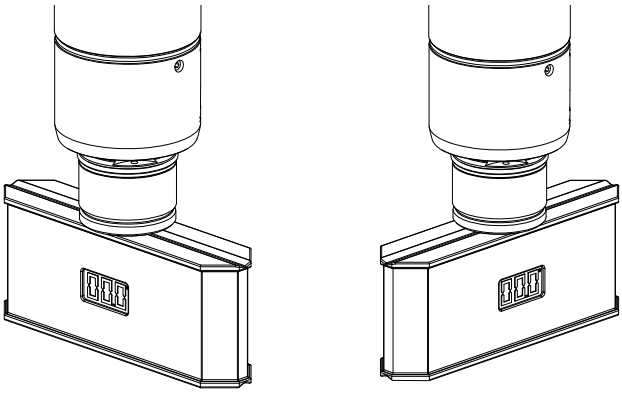

During bevel cutting, the torch is at an angle (not perpendicular) to the workpiece. The torch position for XPR torches can be a range from 0° – 52°.

6. Tighten the screws on the torch mounting bracket.

## Install the consumables

Make sure that the consumables are installed correctly on the torch.

| NOTICE |
| --- |
| **A LOOSE OR OVERTIGHTENED ELECTRODE CAN CAUSE DAMAGE TO THE TORCH**<br>If you do not correctly install and tighten the electrode, torch damage can occur.<br>A tool is necessary to correctly install and tighten the torch electrode. Do not use your hands. Hypertherm recommends tightening the electrode to a torque value of 2.3 N·m – 2.8 N·m (20 lbf·in – 25 lbf·in). |

- The torch head in the XPR torch-assembly kit has 460 A mild steel consumable parts installed on it. Refer to Consumable starter kits on page 420 if necessary.
- For information about how to select consumables for your cutting or marking applications, refer to the *XPR Cut Charts Instruction Manual (809830)*.

1. Remove the power from the cutting system:
   a. Set the line-disconnect switch to the OFF position.
   b. Make sure that the power-indicator LED is **not** illuminated on the plasma power supply or other system components.
2. Select the best consumables for your cutting or marking application.
3. Apply a thin layer of silicone lubricant to each O-ring on all consumables.

   Make sure that the O-rings are shiny. However, too much lubricant can prevent gas flow. Remove unwanted lubricant if found.
4. Remove the torch from the torch receptacle.
5. Use a clean, lint-free cloth to clean the internal and external surfaces of the torch.

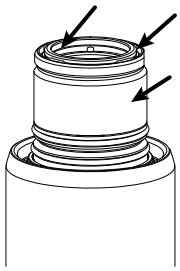

6. Install the consumables on the torch as shown.

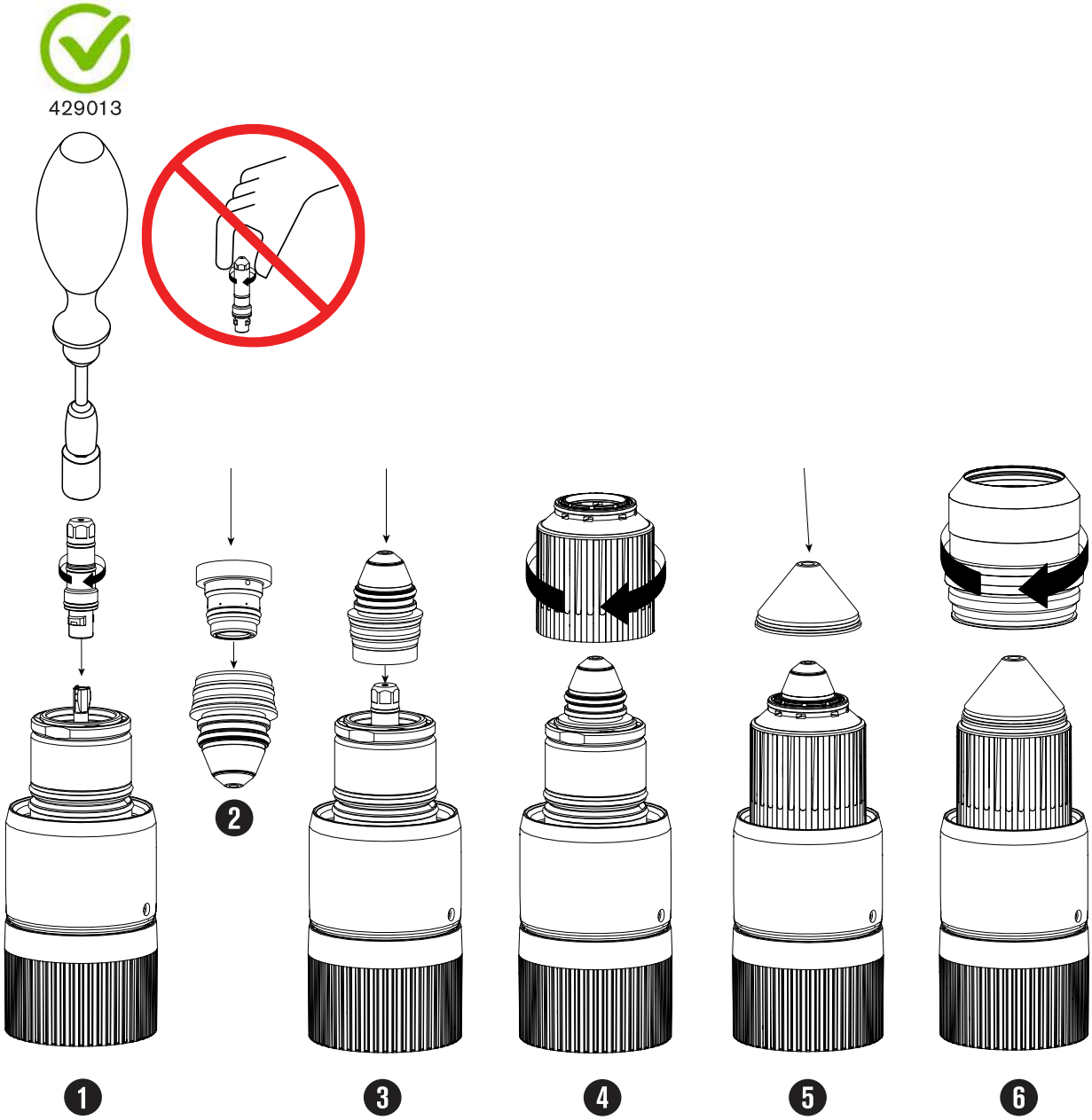

7. Install the torch into the torch receptacle.

   Refer to Install the torch into the torch receptacle on page 145.

## Connect electric power to the cutting system

Connect the main power cord to the plasma power supply. Make sure that the line-disconnect switch is in the OFF position. Use the applicable color codes for the main power cord wires.

**WARNING**

**ELECTRIC SHOCK CAN KILL**

If the line-disconnect switch is not in the OFF position you can get a serious electric shock. Electric shock can seriously injure or kill you.

The line-disconnect switch must be in the OFF position before you connect the power cord to the cutting system. It must REMAIN in the OFF position until all installation steps are complete. In the United States, use a "lock out/tag out" procedure until installation is complete. In other countries, follow the appropriate national and local safety procedures. Refer to the *Safety and Compliance Manual (80669C)* for more safety information.

You must supply the main power cord for your cutting system. Select one that complies with local codes and all regulations and input power requirements. Refer to General input power requirements on page 44.

The distance of the receptacle from the main box also can have an effect on size requirements for the main power cord. For information about the codes in your location and the requirements for your site, speak with a licensed electrician.

1. Make sure that the line-disconnect switch is in the OFF position and stays in the OFF position until all installation steps are complete.
2. Connect the main power cord to the plasma power supply, as shown.
   a. Connect the ground lead (PE) from the main power cord to the ground terminal of TB1.
   b. Connect the W, V, and U leads from the main power cord to the related TB1 terminals.

      If your cutting system has a 200 V, 208 V, 220 V, or 240 V configuration, connect the grounding cable (PE) to the brass block near the ground terminal of TB1. To connect the PE, U, V, and W leads from the main power cord, remove the connection hardware from the TB1

terminal and the brass PE block terminal and use a straight lug with a 0.50 inch inner diameter hole for each connection.

**Figure 39 -** Main power cord wire color and terminal location

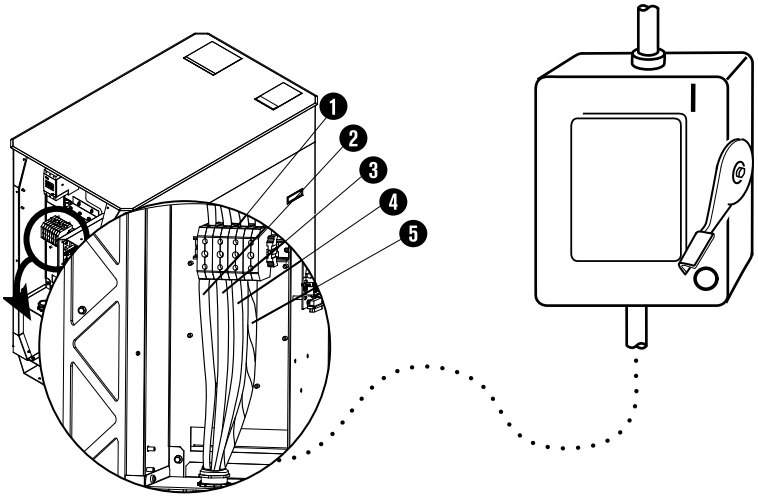


| | | Wire color codes for North America | Wire color codes for Europe, Asia, and most locations outside of North America |
|---|---|---|---|
| **1** | TB1 terminal | – | – |
| **2** | U | Black | Black |
| **3** | V | White | Blue |
| **4** | W | Red | Brown |
| **5** | GND (PE) (earth ground) ⏚ | Green/yellow | Green/yellow |

3. Comply with national and local electrical codes to connect the W, V, and U power leads from the main power cord to the line-disconnect switch.

# 4 Connect for Communication

## Communication methods for XPR cutting systems

There are multiple communication methods to fully operate the plasma cutting system.

Choose the communication method that is best for your cutting system:

- **EtherCAT**
  - Use this method with an EtherCAT-compatible controller. Refer to Connect to the plasma power supply with EtherCAT on page 155.
  - If you use EtherCAT, remote on-off must be wired discretely by the cutting system manufacturer.
- **Serial RS-422 and discrete**
  - Use this method with a serial RS-422 and discrete-compatible controller.
  - If you use serial RS-422, you must also use discrete to fully operate the cutting system.
  - Refer to Connect to the plasma power supply with serial RS-422 on page 157.
  - Refer to Connect to the plasma power supply with discrete on page 162.
- **Wireless (XPR web interface through Wi-Fi®) and discrete**
  - Use this method with a wireless-enabled device and discrete-compatible controller.
  - If you use wireless, you must also use discrete to fully operate the cutting system.
  - Refer to Requirements for the XPR web interface on page 168.
  - Refer to Connect to the plasma power supply with discrete on page 162.

For information about signals and protocols, refer to the *CNC Communication Protocol for the XPR Cutting System (809810)*.

**Table 22 -** Communication requirements and options

| Set process with... [1] | To fully operate the cutting system... | Monitor with... | | |
|---|---|---|---|---|
| | **Discrete** | **EtherCAT** | **XPR web interface** | **RS-422** |
| EtherCAT | Required for remote on-off [2] | **Preferred** | Alternative | Alternative |
| XPR web interface | Required | Alternative | **Preferred** | Alternative |
| RS-422 | Required | Alternative | Alternative | **Preferred** |

1 **The device that first sets a process controls the plasma power supply.** For information about how to change the device that has control of the plasma power supply, refer to Change the device that has control on page 197.

2 Discrete inputs are ignored when a process ID is set over EtherCAT to a cutting system that uses the factory-default configuration. If you have questions, speak to your cutting machine supplier or regional Hypertherm Technical Service team.

### Example

If you use EtherCAT to set the process, the preferred method to monitor is EtherCAT. However, you can use RS-422 or the XPR web interface through Wi-Fi to monitor.

## Requirements for EtherCAT

This information prepares you to connect the plasma power supply to the CNC with EtherCAT cables.

- For an example of a system diagram, refer to EtherCAT multi-drop (multi-system) interface (Sheet 19 of 25) on page 510.
- For information about signals and protocols, refer to *EtherCAT communications* and *Serial RS-422 and EtherCAT commands* in the *CNC Communication Protocol for the XPR Cutting System (809810)*.
- Hypertherm sells EtherCAT cables that have been tested with our cutting system. Refer to EtherCAT CNC interface cables on page 428.
- If you supply your own cables, choose EtherCAT cables that follow the Beckhoff® specification. Refer to EtherCAT cable specifications on page 156.
- To help prevent problems from EMI, make sure that the EtherCAT cables:
  - Have separation from the pilot arc cable, negative cable, or any power cables that have a voltage more than 120 VAC. Refer to Distance requirements between high-frequency cables and control cables on page 68.
  - Are not near the gas connect console or TorchConnect console.
- Hypertherm recommends a minimum distance of 1 meter (3.3 feet) between the plasma power supply and other system components, or between the plasma power supply and an obstacle.

**Figure 40 -** EtherCAT cable

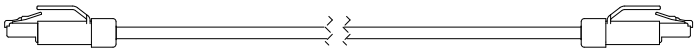

## Connect to the plasma power supply with EtherCAT

- Connect the EtherCAT cables to the plasma power supply and to the CNC as shown.

**Figure 41 -** Connect EtherCAT cables to the plasma power supply

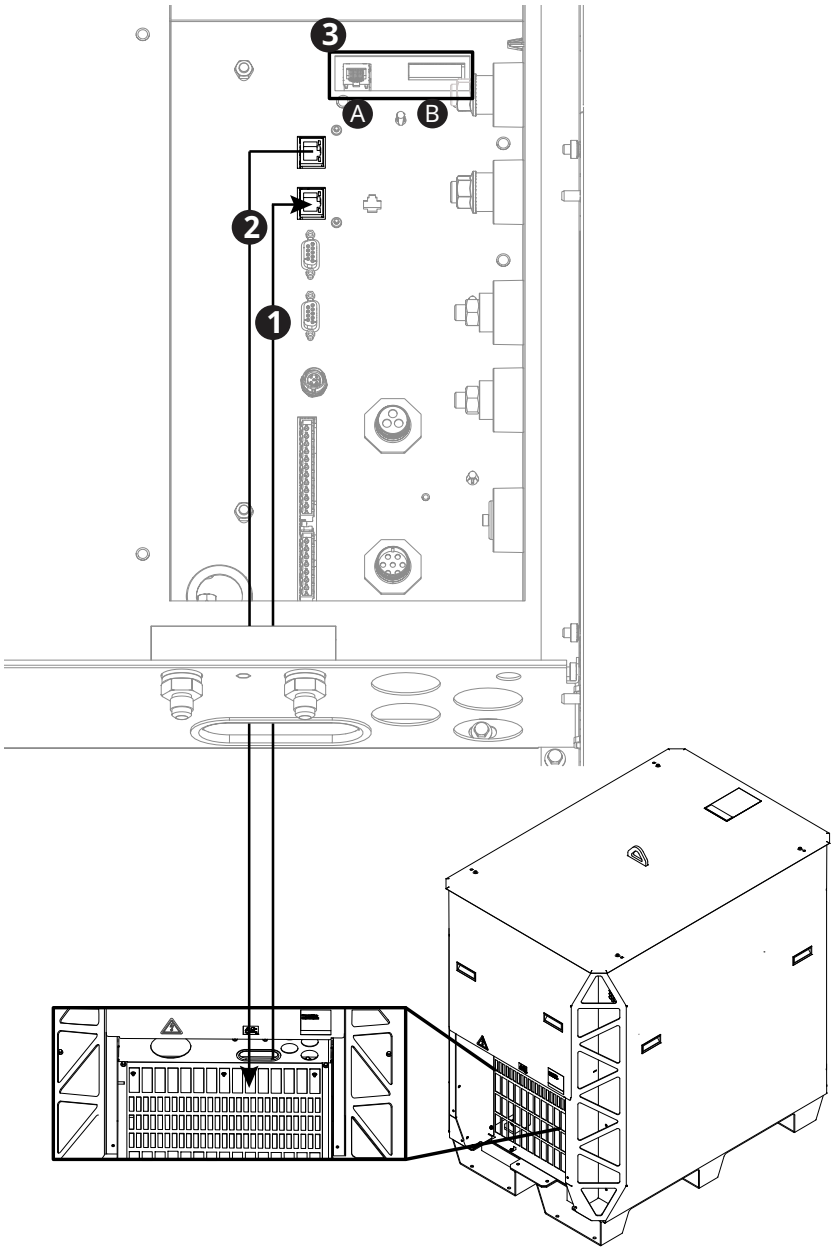

**Figure 41 -** Connect EtherCAT cables to the plasma power supply (continued)

**1** EtherCAT in from the CNC. [1]

**2** EtherCAT out to the next plasma power supply, if necessary. [1]

**3A** Ethernet LAN port: For future applications. **Do not use**.

**3B** Expansion PCB connectors: Necessary for redundant remote on-off feature, alternate 24 VDC power input, and analog estimated arc voltage output.

1 Refer to the label on the rear of your plasma power supply.

### EtherCAT cable specifications

Use this table to identify the specification requirements for EtherCAT interface cables.

If you supply your own cables, choose EtherCAT cables that follow the Beckhoff specification.

**Table 23 -** EtherCAT cable specifications

| Cable element | Specification |
|---|---|
| Type | Cat5e, 4-wire, 2-pair, double-shielded (overall foil and braid shield) |
| Wire | ▪ Construction: Stranded tinned wire<br>▪ Diameter: 0.75 mm (7 X 0.25 mm), 22 AWG<br>▪ Insulation: Polyethylene, 1.5 mm (0.06 inch) diameter |
| Core | ▪ Construction: Filler as central element<br>▪ Layer 1: 4-wire, 2-pair in star-quad configuration<br>▪ Sequence of colors: White, yellow, blue, orange<br>▪ Layer 2: Plastic tape overlapped<br>▪ Inner jacket: Thermoplastic copolymer, 3.9 mm (0.04 inch) diameter<br>▪ Aluminum laminated foil overlapped<br>▪ Shield: Braided, tinned copper wires, 0.13 mm (0.005 inch) diameter, coverage approximately 85%, 4.7 mm (0.19 inch) diameter |
| Jacket | ▪ Material: Polyurethane<br>▪ Wall thickness: 0.9 mm (0.04 inch)<br>▪ Outer diameter: 6.5 mm (0.26 inch) ± 0.2 mm (0.008 inch) |
| Maximum length for EtherCAT cables | 75 m (246 ft) |

# Requirements for serial RS-422

This information prepares you to connect the plasma power supply to the CNC with serial RS-422 cables.

- For an example of a system diagram, refer to Serial RS-422 and discrete multi-drop (multi-system) interface (Sheet 20 of 25) on page 513.

- For serial RS-422 multi-drop (multi-system) addressing, refer to *XPR serial RS-422 multi-drop (multi-system) addressing* in the *CNC Communication Protocol for the XPR Cutting System (809810)*.
- For information about signals and protocols, refer to *XPR serial RS-422 communications* and *Serial RS-422 and EtherCAT commands* in the *CNC Communication Protocol for the XPR Cutting System (809810)*.
- To use Arc Voltage Control (AVC) with a serial RS-422 cutting system, connect pin 5 and pin 6 to J4 on the expansion PCB to access the estimated arc voltage. For information about how to configure the arc voltage output scale through serial or EtherCAT, refer to the *CNC Communication Protocol for the XPR Cutting System (809810)*.
- For cable pinout details, refer to Pinouts for serial RS-422 interface cables on page 160.
- For cable lengths, refer to Serial CNC interface cables on page 430.
- Hypertherm recommends a minimum distance of 1 meter (3.3 feet) between the plasma power supply and other system components, or between the plasma power supply and an obstacle.

**Figure 42 -** Serial RS-422 cable

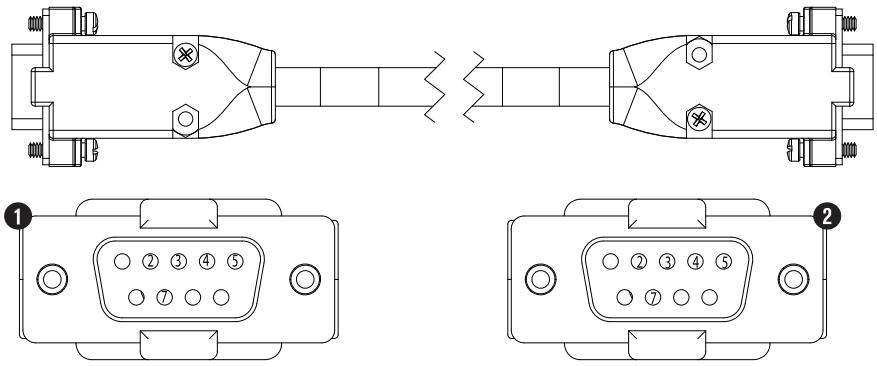


**1** End A (male) to the plasma power supply (top serial connector, J12)

**2** End B (male) to the CNC

## Connect to the plasma power supply with serial RS-422

The serial RS-422 cable connects the plasma power supply to other components for data transfer.

Before you begin:

- Remove external panels from the system components on page 101
- Pinouts for serial RS-422 interface cables on page 160

1. Remove the rear panel of the plasma power supply.
2. Put End A of the serial RS-422 cable through the hole in the bottom of the rear compartment in the plasma power supply.

3. Connect End A of the serial RS-422 cable to the correct connector on the control PCB in the plasma power supply:
   - For cutting systems with multiple plasma power supplies, use the top connector (J12) for the CNC. Use the bottom connector (J13) to connect to the next plasma power supply.
   - For cutting systems with one plasma power supply, you can use either connector to connect to the CNC.
4. Connect End B of the cable to the CNC.
5. If you want to operate the cutting system, continue with the next step.

   If you want to only monitor with RS-422 serial, you are done.
6. Connect to the plasma power supply with discrete on page 162.

**Figure 43 -** Connect the serial RS-422 cable to the plasma power supply

**Figure 43 -** Connect the serial RS-422 cable to the plasma power supply (continued)

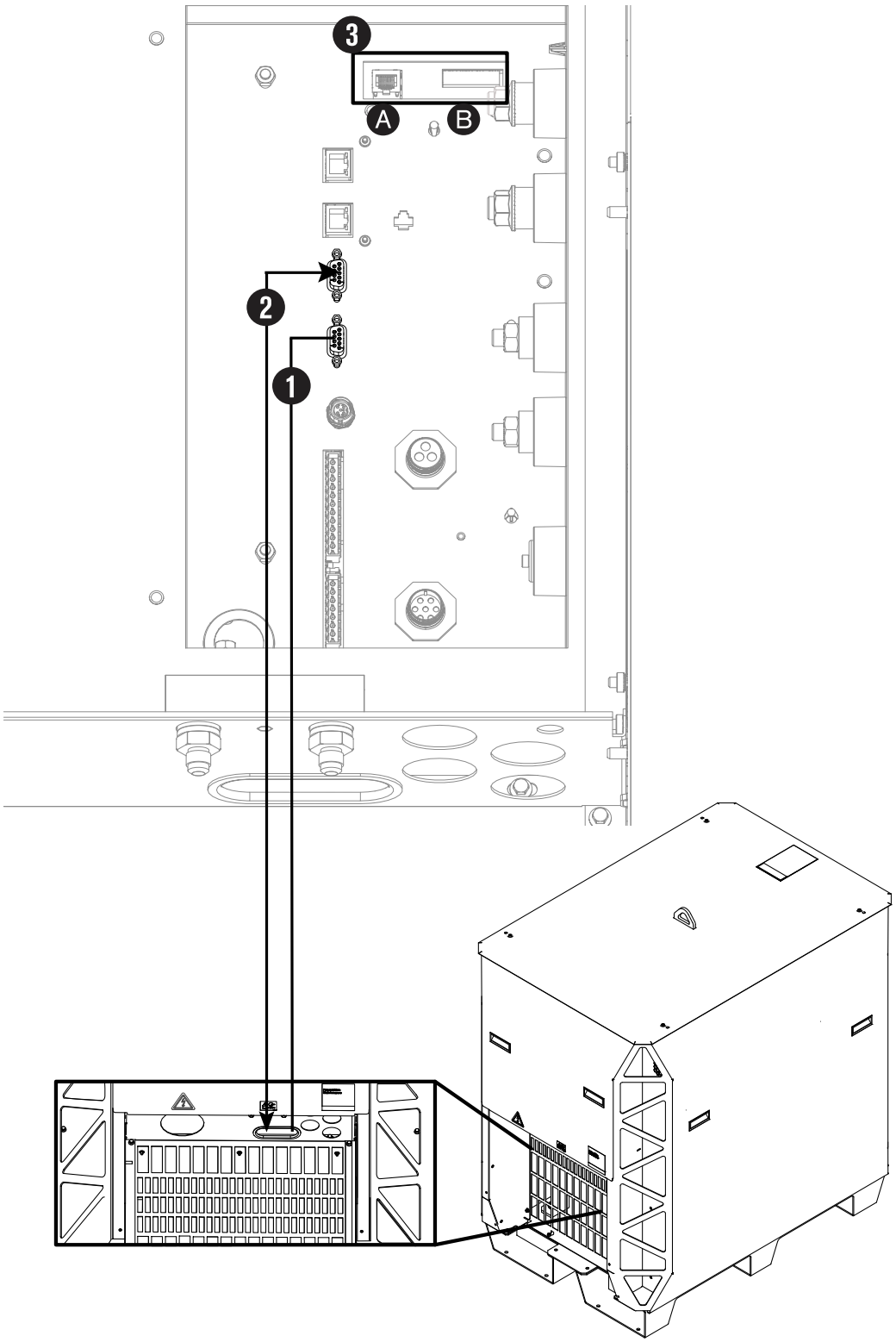


**1** Serial RS-422 in from the CNC

**Figure 43 -** Connect the serial RS-422 cable to the plasma power supply (continued)

**2** Serial RS-422 out to the next plasma power supply (if necessary)

**3A** Ethernet LAN port: For future applications. **Do not use.**

**3B** Expansion PCB connectors: Necessary for redundant remote on-off feature, alternate 24 VDC power input, and analog estimated arc voltage output.

### Pinouts for serial RS-422 interface cables

Use this table to identify the signals, pin numbers, and wire colors in interface cables with serial RS-422 connectors.

**Table 24 -** Pinout for serial RS-422 interface cable

| End A | | Wire color | End B | | Wire type |
|---|---|---|---|---|---|
| To the plasma power supply | | | To the CNC | | |
| Signal | Pin number | | Pin number | Signal | |
| TxD + | 4 | Red | 7 | RxD + | Pair |
| TxD - | 2 | Black | 3 | RxD - | |
| RxD + | 7 | White | 4 | TxD + | Pair |
| RxD - | 3 | Black | 2 | TxD - | |
| GND | 5 | Green | 5 | GND | Pair |
| – | Cut | Black | Cut | – | |

# Requirements for discrete

This information prepares you to connect the plasma power supply to the CNC with discrete cables.

- You must use serial RS-422 or the XPR web interface through Wi-Fi with discrete to operate the cutting system. If you use EtherCAT, remote on-off must be wired discretely by the cutting system manufacturer.
- You can use serial RS-422 or the XPR web interface through Wi-Fi with discrete to operate the cutting system.
- To use AVC with a serial RS-422 cutting system, connect pin 5 and pin 6 to J4 on the expansion PCB to get access to the estimated arc voltage. For information about how to configure the arc voltage output scale through serial or EtherCAT, refer the *CNC Communication Protocol for the XPR Cutting System (809810)*.

- For an example of a system diagram, refer to Discrete multi-drop (multi-system) interface (Sheet 21 of 25) on page 516.
- For information about signals and protocols, refer to *XPR discrete communication* in the *CNC Communication Protocol for the XPR Cutting System (809810)*.
- For cable lengths, refer to Discrete CNC interface cables on page 429.
- Hypertherm recommends a minimum distance of 1 meter (3.3 feet) between the plasma power supply and other system components, or between the plasma power supply and an obstacle.

**Figure 44 -** Discrete cable

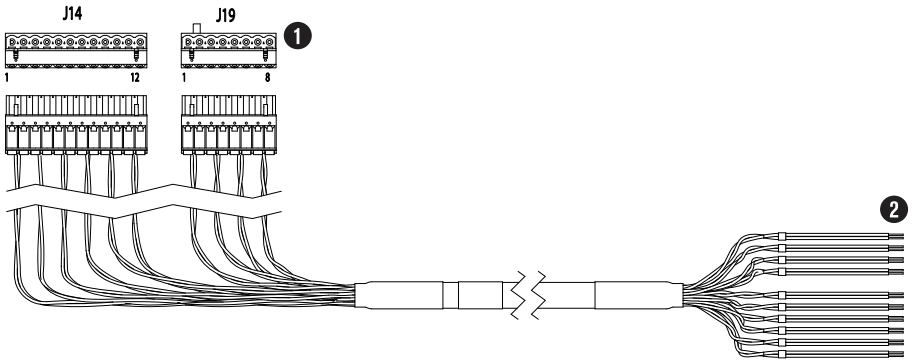


**1** End A to the plasma power supply

**2** End B to the CNC

**Figure 45 -** Discrete cable for the expansion PCB

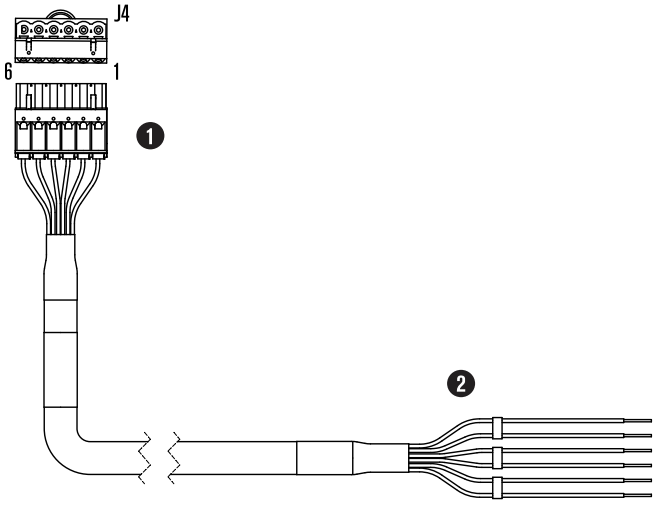


**1** End A to the plasma power supply

**2** End B to the CNC

# Connect to the plasma power supply with discrete

Do these steps to connect the plasma power supply to the CNC with discrete cables.

Before you begin:

- Remove external panels from the system components on page 101
- Pinouts for the discrete interface cables on page 164

1. Remove the rear panel of the plasma power supply.
2. Put End A of the discrete cable through the hole in the bottom of the rear compartment in the plasma power supply.
3. Connect J14 and J19 to their respective connectors on the control PCB in the plasma power supply.
4. Connect End B of the cable to the CNC.
5. Put End A of the discrete cable for the expansion PCB through the hole in the bottom of the rear compartment of the plasma power supply.
6. Connect End A of the discrete cable for the expansion PCB to the J4 connector on the expansion PCB.
7. Connect End B of the discrete cable for the expansion PCB to the CNC.

**Figure 46 -** Connect the discrete cable to the plasma power supply

**Figure 46 -** Connect the discrete cable to the plasma power supply (continued)

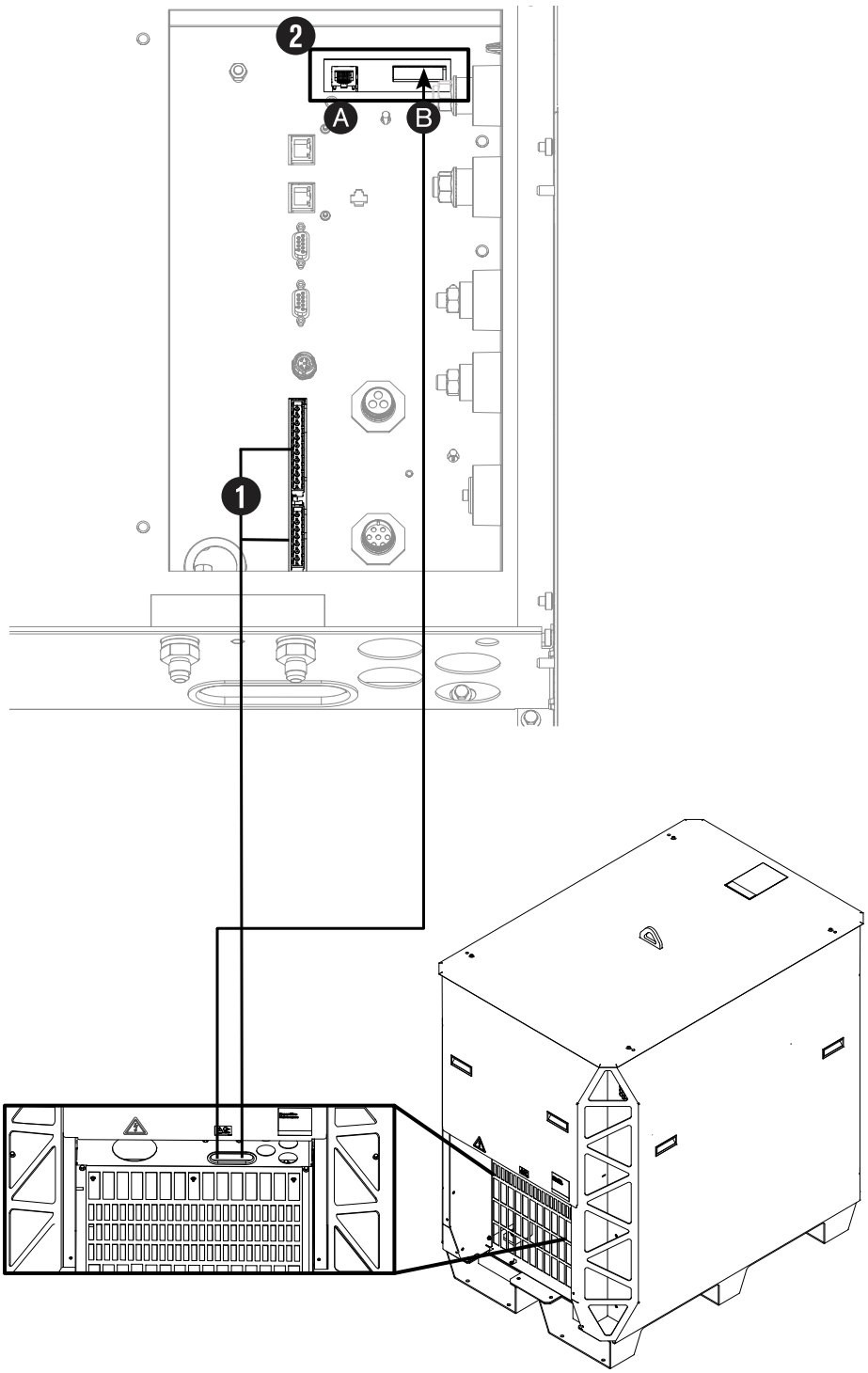


**1** Discrete cables in from the CNC.

**2A** Ethernet LAN port: For future applications. **Do not use.**

**Figure 46 -** Connect the discrete cable to the plasma power supply (continued)

**2B** Expansion PCB connectors: Necessary for redundant remote on-off feature, alternate 24 VDC power input, and analog estimated arc voltage output.

## Pinouts for the discrete interface cables

Use these tables to identify the signals, pin numbers, and wire colors in interface cables with discrete connectors.

**Table 25 -** Pinout for J14 on the discrete cable

| To the plasma power supply | | | | |
|---|---|---|---|---|
| **J14 pin** | **Input/ output** | **Signal** | **Function** | **Wire color** |
| 1 | Input [1, 2] | Remote on/off + | When the input is open, the power to the plasma power supply, the consoles, and the contactors is disabled. | Red |
| 2 | | Remote on/off - | | Black |
| 3 | Input [3] | Plasma start + | The CNC starts preflow. If the hold input is not active, the CNC continues with the plasma arc. The plasma power supply stays in preflow as long as the hold input stays active. | White |
| 4 | | Plasma start - | | Black |
| 5 | Output [3] | Motion + | Tells the CNC that an arc transfer has occurred and to begin machine motion after the CNC pierce delay time. | Green |
| 6 | | Motion - | | Black |
| 7 | Input [1, 4] | Hold + | The CNC delays plasma arc start. This signal is usually used in combination with the Start signals to synchronize multiple torches. Start this signal at the same time as the Plasma Start signal. Stop this signal to fire the torch. | Blue |
| 8 | | Hold - | | Black |
| 9 | Input [1] | Shield pierceflow + | The CNC tells the plasma system to continue the shield preflow until after the pierce-delay time. Start this signal at the same time as the Plasma Start signal. Stop this signal when the pierce time is complete. | Yellow |
| 10 | | Shield pierceflow - | | Black |
| 11 | Output [5] | F+24V CNC | Available 24 VDC (200 mA maximum) | Brown |
| 12 | | F PWRGND | Ground | Black |

1 Inputs are optically isolated. It is necessary to supply them with 24 VDC at 12.5 mA or dry-contact closure at 8 mA.

2 If J27 of the main control PCB has a jumper between pin 2 and pin 3, refer to Pinouts for the discrete cable for the expansion PCB on page 165, Install a redundant remote on-off switch on page 207, and Examples of output circuits on page 202.

3 Outputs are optically isolated, open-collector transistors. The maximum rating is 24 VDC at 10 mA.

4 Although the plasma power supply has output capability, it is usually used only as an input.

5 CNC +24 VDC provides 24 VDC at 200 mA maximum. A jumper is necessary on J17 to use 24 V power.

**Table 26 -** Pinout for J19 on the discrete cable

| To the plasma power supply | | | | |
|---|---|---|---|---|
| **J19 pin** | **Input/ output** | **Signal** | **Function** | **Wire color** |
| 1 | Output [1] | Error + | Tells the CNC that an alert, error, or failure has occurred. This signal is not intended to be used to stop table motion. | Orange |
| 2 | | Error - | | Black |
| 3 | | Ready for start + | Tells the CNC that the plasma power supply is ready for the plasma start. | White |
| 4 | | Ready for start - | | Red |
| 7 | Output [2] | Shield ohmic contact + | Refer to the footnotes for additional information. | Blue |
| 8 | | Shield ohmic contact - | | Red |

1 Outputs are optically isolated, open-collector transistors. The maximum rating is 24 VDC at 10 mA.

2 Shield ohmic contact is used as an input into an ohmic contact circuit (with either the XPR internal circuit or a customer-supplied circuit) to sense when the torch shield has touched the workpiece. Refer to Use ohmic contact sense on page 198.

## Pinouts for the discrete cable for the expansion PCB

Use this table to identify the signals, pin numbers, and wire colors in the interface cable with discrete connectors for the expansion PCB.

**Table 27 -** Pinouts for the discrete cable for the expansion PCB

| End A | | | | |
|---|---|---|---|---|
| **Pin number** | **Input/ output** | **Signal** | **Function** | **Wire color** |
| 1 | Input | ALT 24 VDC + (+24 VDC) [1] | Externally supplied 24 VDC lets communications for the control PCB and fieldbus continue when three-phase power is OFF. | Red |
| 2 | Input | ALT 24 VDC - (GND) [1] | | Black |
| 3 | Input | R_RMT_ON-OFF + (24 VDC) [2] | Both signals are necessary for the plasma power supply to work with the redundant remote on-off feature. | White |
| 4 | Input | R_RMT_ON-OFF - (RTN) [2] | | Black |
| 5 | Output | Output estimated arc voltage OUT + (0 V – 10 V) [3] | Estimated arc voltage output (0 VDC - 10 VDC) is available for torch-height controllers to work. | Green |
| 6 | Output | Output estimated arc voltage OUT - (GND) [3] | | Black |

1 A 24 VDC from the CNC is necessary to use this feature.

2 A 24 VDC (500 mA) and return (GND) from the CNC or controlling device to the expansion PCB are necessary for redundant remote on-off for the expansion PCB and input to the control PCB. Hypertherm recommends the use of a separate cable between the remote on-off input and main control PCB.

3 Estimated arc voltage analog output (0 V – 10 V ). The default ratio is 30:1. For information about how to use the XPR web interface to change the voltage ratio, refer to Use the XPR web interface to change the arc voltage output scale on page 166.

## Use the XPR web interface to change the arc voltage output scale

Use these steps to change the voltage ratio through the XPR web interface.

Before you begin:

- You must have a computer-based device with a screen, a web browser that has support for the latest web standards, and wireless access.
- You must set up a router that has access to a local network. Use the instructions for the router to do this. If you have problems setting up your router, speak to your system administrator.
- You must know the SSID and passphrase for the router.

1. Do the procedure in Use AP mode to connect on page 169 to connect the wireless set-up device to the plasma power supply.
2. Go to the **Other** screen.

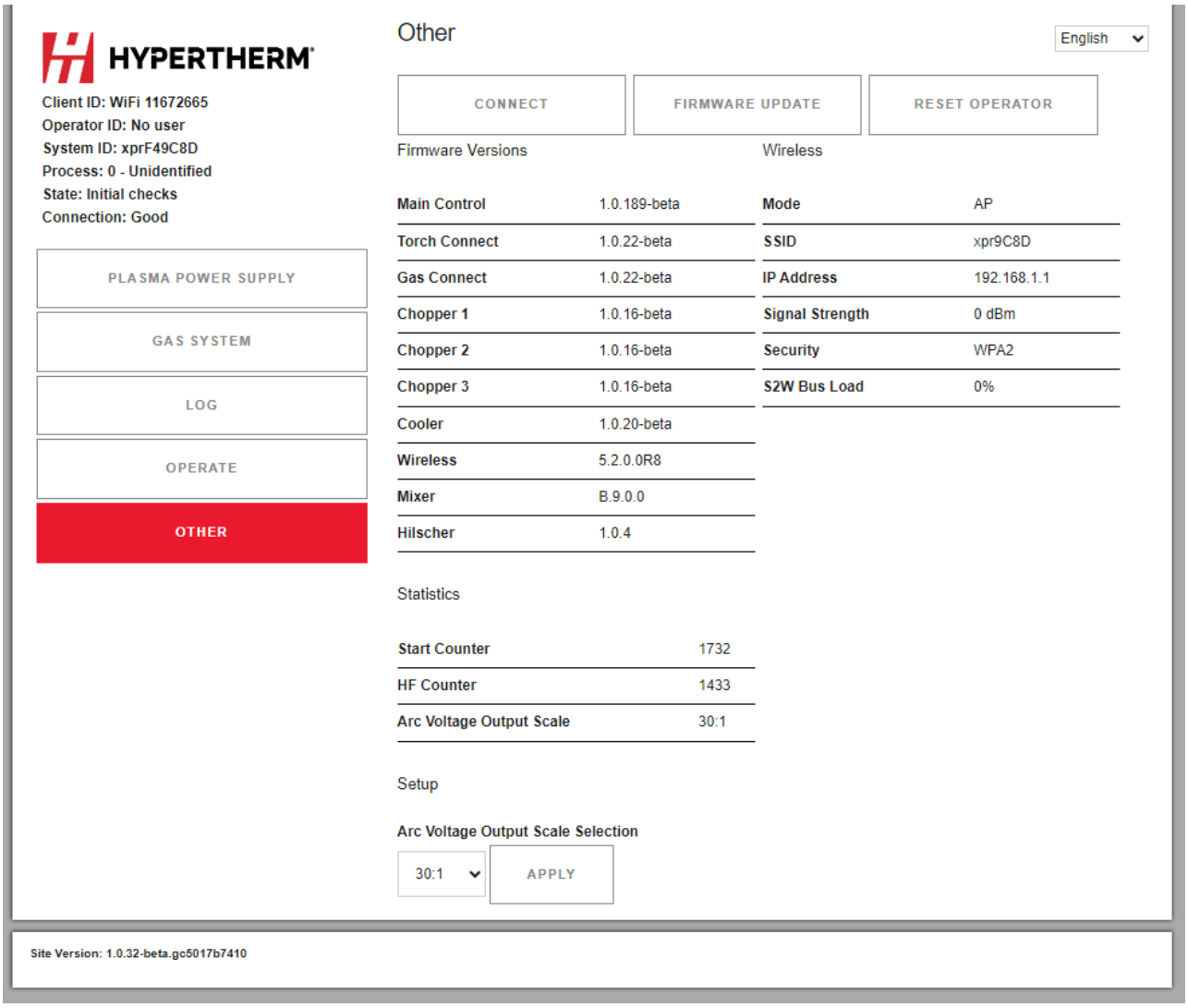


3. Use the dropdown menu under **Setup** to choose the **Arc Voltage Output Scale** that you want.

   The default voltage ratio is 30:1.

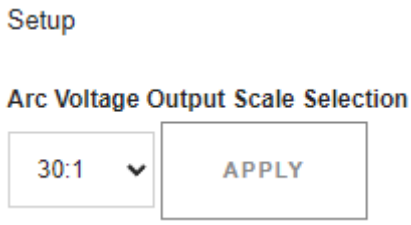


4. Choose **Apply** .
5. Remove the power from the cutting system.
6. Supply power to the cutting system.

# Requirements for the XPR web interface

You can connect to the XPR web interface through Wi-Fi with AP mode or with network mode.

## NOTICE

**WEAK NETWORK SECURITY INCREASES THE RISK FOR UNAUTHORIZED CUTTING SYSTEM OPERATION OR MISUSE**

If you use a wireless (Wi-Fi) network to communicate with your cutting system, Hypertherm recommends the use of a secure Wi-Fi network to minimize the risk of unauthorized cutting system operation or misuse. Unauthorized access or misuse of the Wi-Fi network can result in incorrect settings or commands. Bad settings and commands can cause an uncontrollable or unusable system. A bad effect on system performance, shortened consumable life, and torch damage is also possible. Minimum security features can include, but are not limited to, the following:

- Password protection
- WPA2 security for the plasma power supply
- A hidden Service Set Identifier (SSID) for the Wi-Fi network
- Operator training about network security

You must use discrete with the XPR web interface to operate the cutting system.

If you go out of range with the device, you cannot communicate with the cutting system. The cutting system continues to operate. For more information about distances for wireless, refer to Distance requirements for communications on page 69.

Hypertherm recommends a minimum distance of 1 meter (3.3 feet) between the plasma power supply and other system components, or between the plasma power supply and an obstacle.

You can use one of the following options to connect to the XPR web interface through Wi-Fi:

- AP mode. Refer to Use AP mode to connect on page 169.
  - You connect to the same network as the plasma power supply.
  - AP mode is the default connection option. You connect to a single plasma power supply.
- Network mode. Refer to Use network mode to connect on page 171.
  - You connect the plasma power supply to your network.
  - The advantage of network mode is that you can connect to one network to get access to multiple plasma power supplies.

## Web interface support information

- If you have a problem connecting and you think it is a problem with your device, router, or local network, speak to your system administrator.
- If you have a problem connecting and you think it is a problem with the plasma power supply, speak to your cutting machine supplier or regional Hypertherm Technical Service team.

## Use AP mode to connect

In AP mode, each plasma power supply has its own connection. You can only connect to and control one plasma power supply at a time.

Before you begin:

- Computer-based device with a screen
- Web browser that has support for the latest web standards
- Wireless access

1. Supply power to the cutting system:
   a. Set the line-disconnect switch to the ON position.
   b. Make sure that the power-indicator LED on the plasma power supply is illuminated.
   c. Make sure that the remote on-off switch for the plasma power supply is set to ON.
   d. If the redundant remote on-off switch is installed, make sure that it is set to ON.
2. On your device, go to the wireless connections menu.

   This menu can be different on different devices.
3. Choose the XPR connection.

   The default connection name is "xpr" + the System ID. The System ID is the last four digits of the Media Access Control (MAC) address. For more information about the System ID and MAC address, refer to Web interface screen information on page 188.

   If you want to change the connection name, refer to Other screen on page 196.

4. Enter the password hypertherm.

   If you want to change the connection name, refer to Other screen on page 196.

5. Open a web browser.
6. Go to 192.168.1.1/index.html.
7. To fully operate the cutting system, you must also use discrete.

   Refer to Connect to the plasma power supply with discrete on page 162.

- The plasma power supply is now connected.
- The information about your plasma power supply and connection are located in the top left of the XPR web interface.
- If the Client ID and the Operator ID are the same on your device, you are in control of the plasma power supply and can set a process.
- Refer to Web interface screen information on page 188 for more information about the interface menus.

**Figure 47 -** Plasma power supply and connection information in the web interface

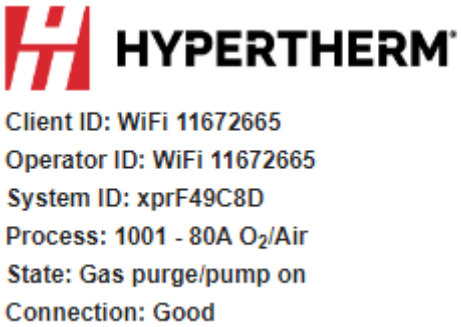


## Use network mode to connect

Use network mode to connect multiple plasma power supplies to a network. You can connect to and control multiple plasma power supplies at the same time.

Before you begin:

- You must have a computer-based device with a screen, a web browser that has support for the latest web standards, and wireless access.
- You must set up a router that has access to a local network. Use the instructions for the router to do this. If you have problems setting up your router, speak to your system administrator.
- You must know the SSID and passphrase for the router.

1. Use the procedure in Use AP mode to connect on page 169 to connect the wireless set-up device to the plasma power supply.
2. Choose **Connect** on the **Other** screen to open the **Device Setup** screen.

   The XPR web interface shows different fields for different models. The screen shown is for reference only.

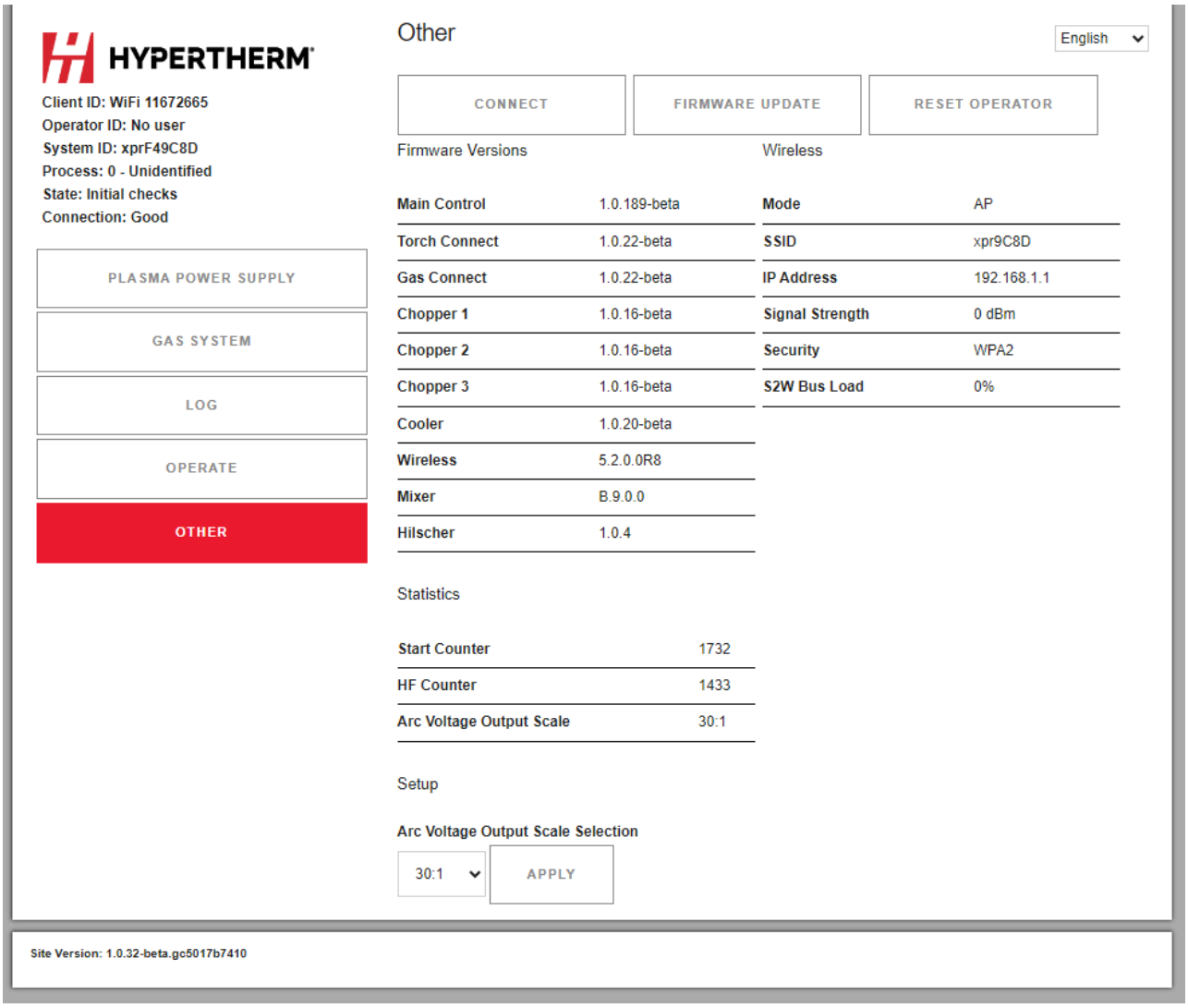


3. Use the **Device Setup** screen to configure wireless adapter settings as necessary.

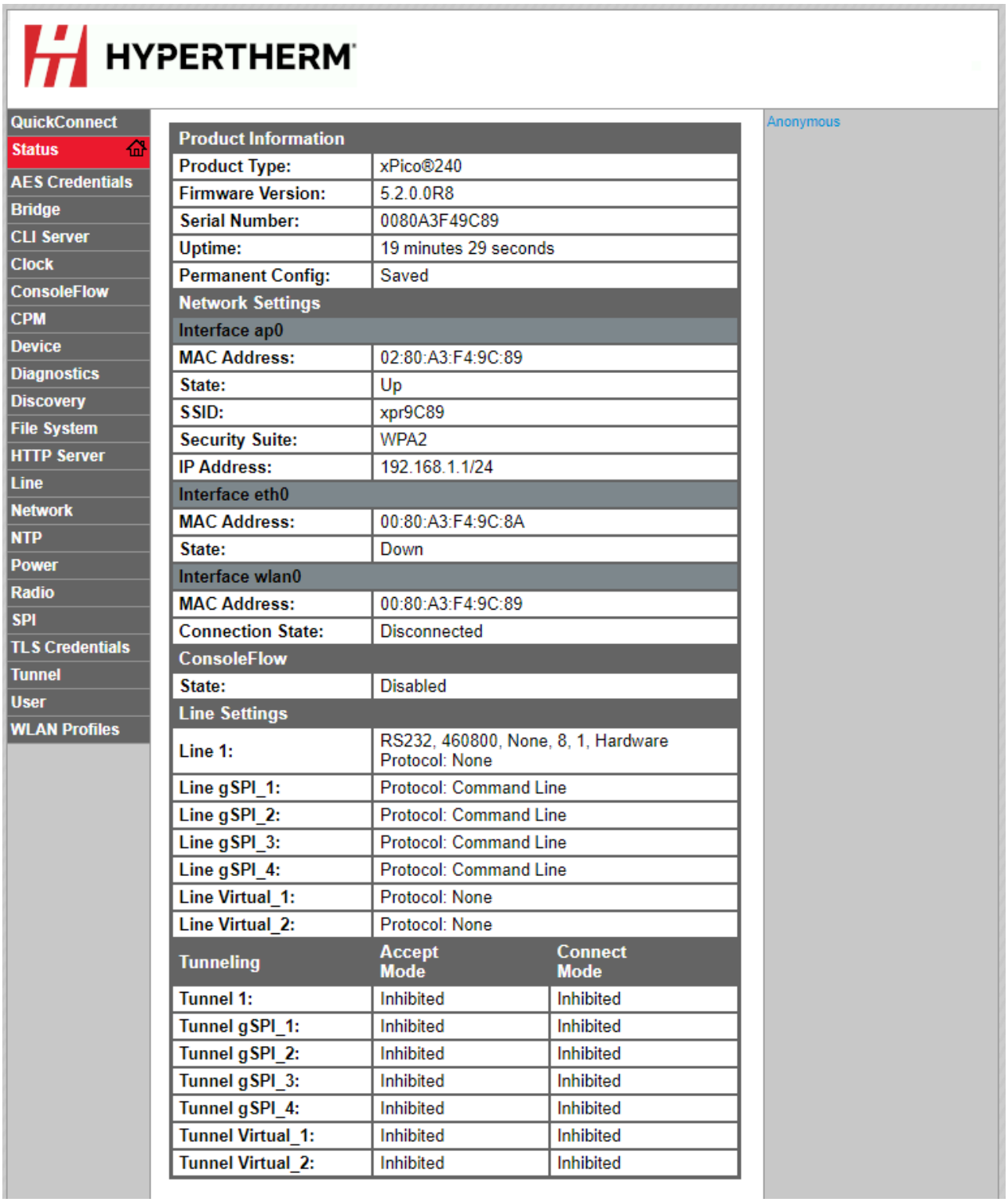


| Product Information | | |
|---|---|---|
| Product Type: | xPico®240 | |
| Firmware Version: | 5.2.0.0R8 | |
| Serial Number: | 0080A3F49C89 | |
| Uptime: | 19 minutes 29 seconds | |
| Permanent Config: | Saved | |
| **Network Settings** | | |
| **Interface ap0** | | |
| MAC Address: | 02:80:A3:F4:9C:89 | |
| State: | Up | |
| SSID: | xpr9C89 | |
| Security Suite: | WPA2 | |
| IP Address: | 192.168.1.1/24 | |
| **Interface eth0** | | |
| MAC Address: | 00:80:A3:F4:9C:8A | |
| State: | Down | |
| **Interface wlan0** | | |
| MAC Address: | 00:80:A3:F4:9C:89 | |
| Connection State: | Disconnected | |
| **ConsoleFlow** | | |
| State: | Disabled | |
| **Line Settings** | | |
| Line 1: | RS232, 460800, None, 8, 1, Hardware Protocol: None | |
| Line gSPI_1: | Protocol: Command Line | |
| Line gSPI_2: | Protocol: Command Line | |
| Line gSPI_3: | Protocol: Command Line | |
| Line gSPI_4: | Protocol: Command Line | |
| Line Virtual_1: | Protocol: None | |
| Line Virtual_2: | Protocol: None | |
| **Tunneling** | **Accept Mode** | **Connect Mode** |
| Tunnel 1: | Inhibited | Inhibited |
| Tunnel gSPI_1: | Inhibited | Inhibited |
| Tunnel gSPI_2: | Inhibited | Inhibited |
| Tunnel gSPI_3: | Inhibited | Inhibited |
| Tunnel gSPI_4: | Inhibited | Inhibited |
| Tunnel Virtual_1: | Inhibited | Inhibited |
| Tunnel Virtual_2: | Inhibited | Inhibited |

## Select an existing wireless network

Use these steps to connect to an existing wireless network.

When you choose this option, the plasma power supply scans for and shows the available access points.

1. On the **Device Setup** screen, choose **QuickConnect**.

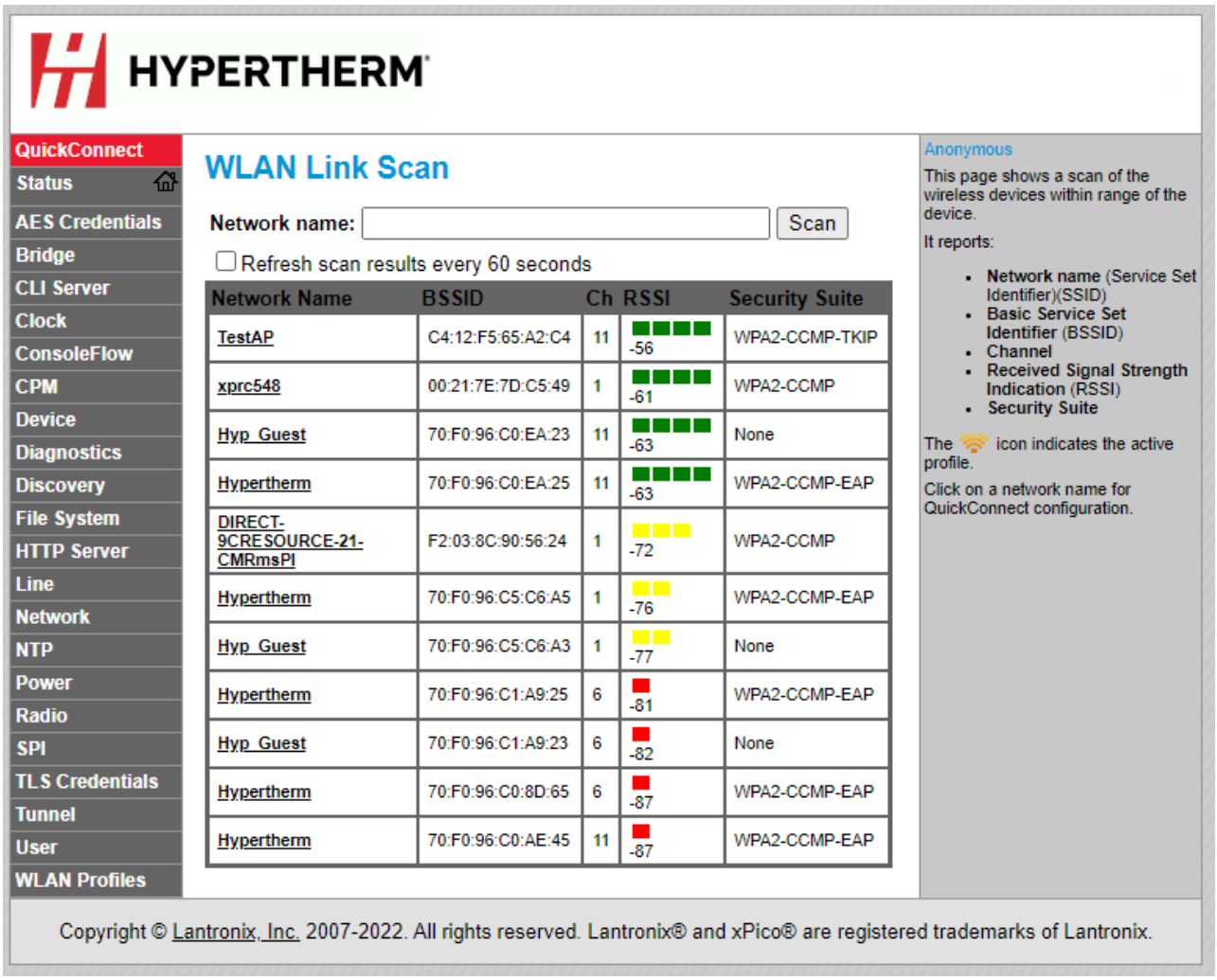


2. On the **WLAN Link Scan** screen, choose the network that you want.

3. On the **WLAN Profile** screen, enter the network password, then choose **Submit**.

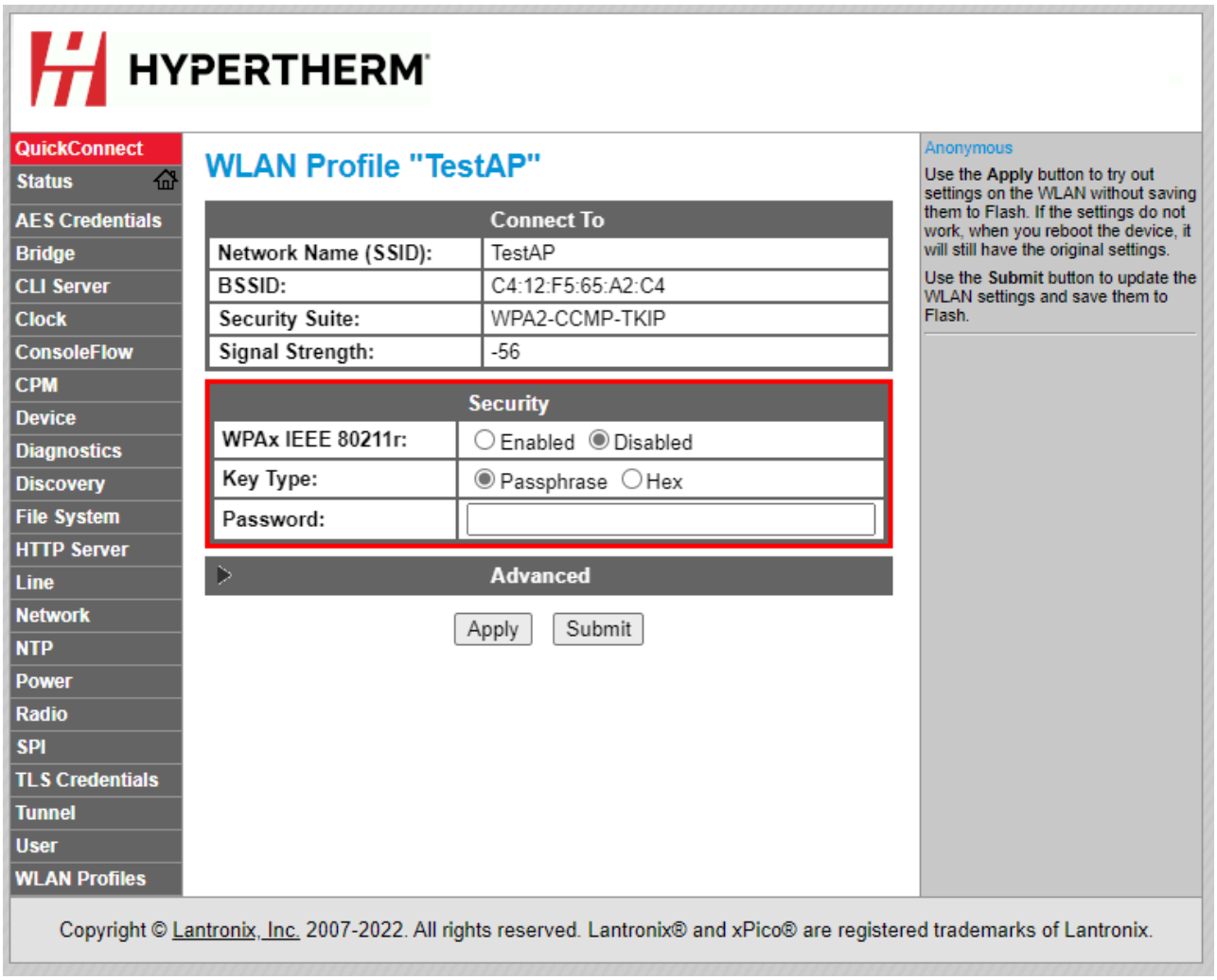


- The network is now connected.
- If you are monitoring with the XPR web interface through Wi-Fi, you are done.

What to do next: If you want to operate the cutting system, you must connect to the plasma power supply with discrete. Refer to Connect to the plasma power supply with discrete on page 162.

## Set up the wireless network manually

Use these steps to set up a wireless network manually.

1. On the **Device Setup** screen, choose **WLAN Profiles**.
2. In the **WLAN Profile Management** field, enter a name for the profile you want to create, and choose **Apply**.

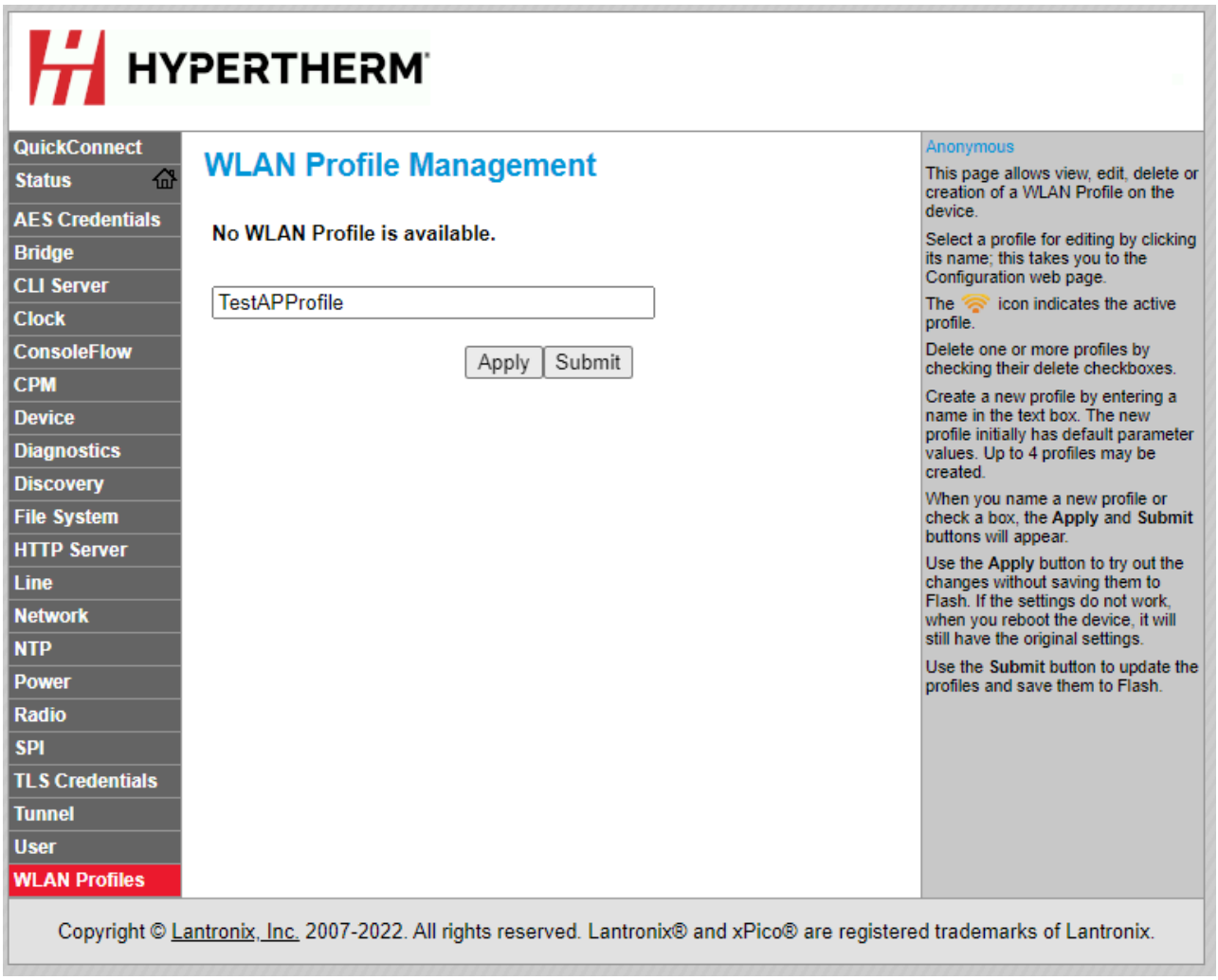


3. Choose the profile you want and configure its settings, including **Network Name**, **Security**, and **Passphrase**.

4. Choose **Submit** to save the profile settings and connect to the network.

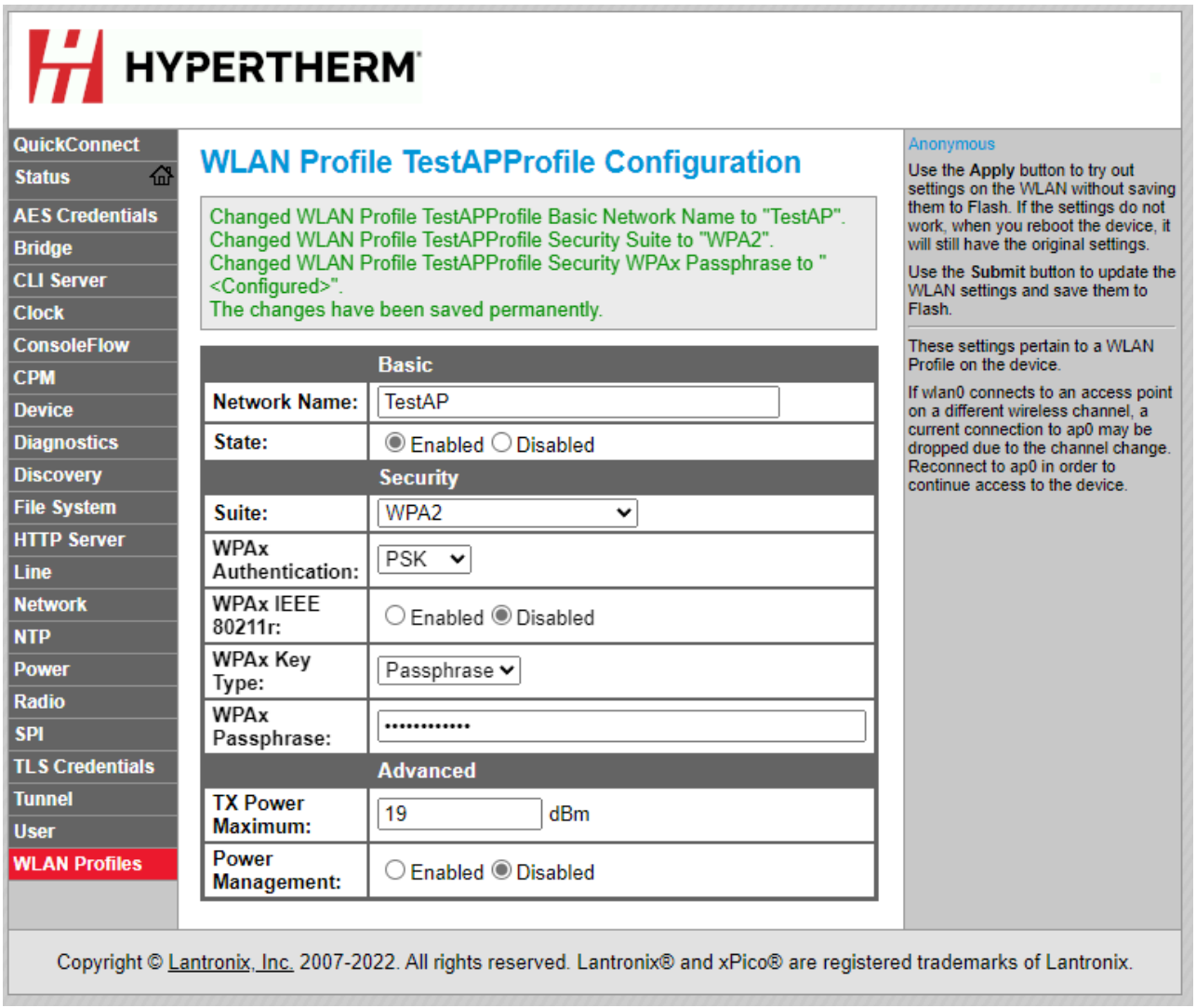


- If you are monitoring with the XPR web interface, you are done.
- The selected wireless settings are applied to connect the plasma power supply to the new network. The plasma power supply resets and connects to the new network.

What to do next:

- If you want to operate the cutting system, you must connect to the plasma power supply with discrete. Refer to Connect to the plasma power supply with discrete on page 162.
- To access the web interface through Wi-Fi after setup, go to Access the XPR web interface after setup in network mode on page 178.

## Access the XPR web interface after setup in network mode

Use these steps to access the XPR web interface using the IP address of the plasma power supply.

Before you begin: Hypertherm recommends that you use Dynamic Host Configuration Protocol (DHCP) reservation if it is available on your router. This lets the plasma power supply keep the same IP address through power cycles without having to set up the wireless module with the static IP address.

1. On the **Device Setup** screen, choose **Status**.
2. Look in the **Interface wlan0** fields on the **Status** screen to find the IP address that you want.

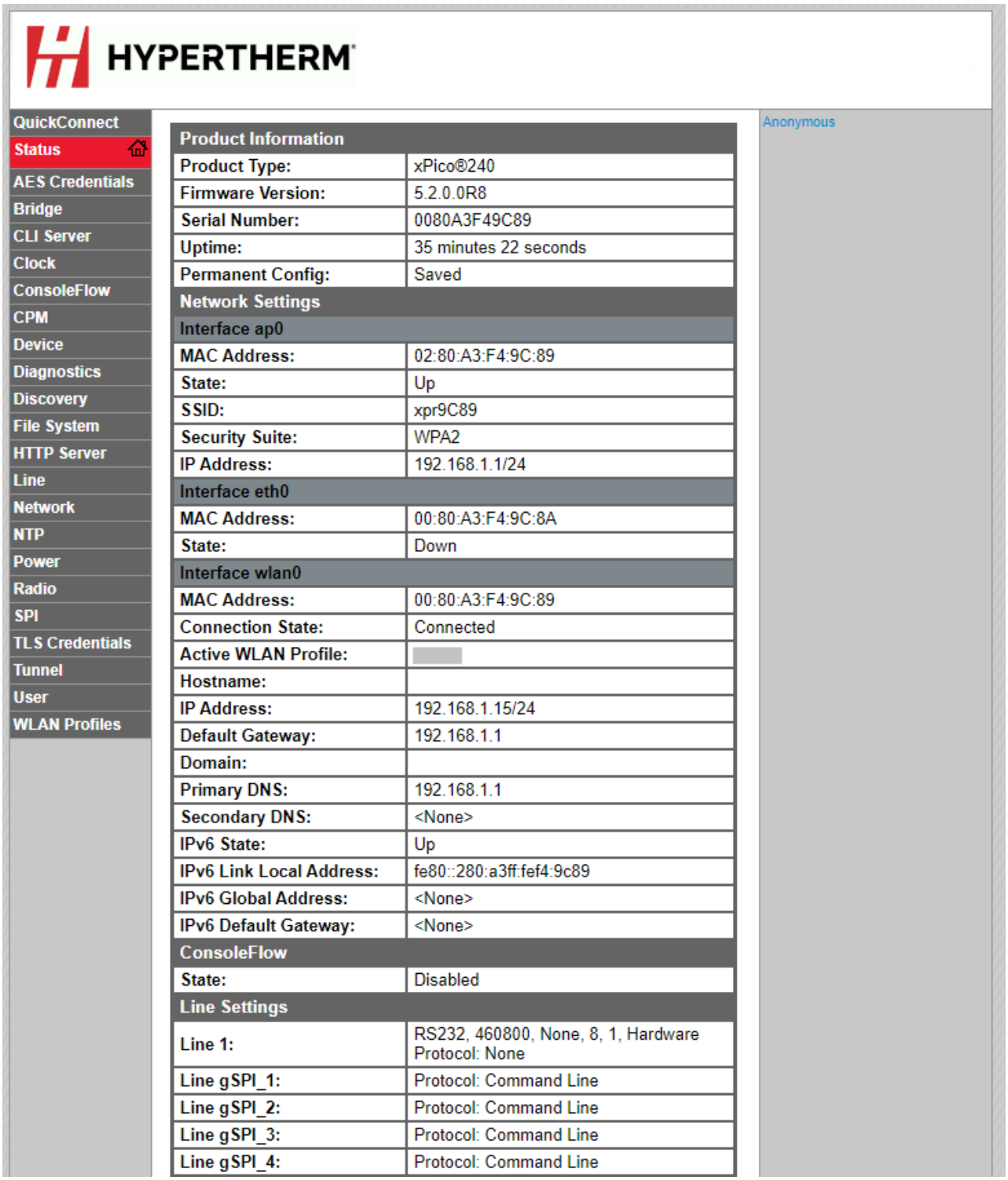


| Product Information | |
|---|---|
| Product Type: | xPico®240 |
| Firmware Version: | 5.2.0.0R8 |
| Serial Number: | 0080A3F49C89 |
| Uptime: | 35 minutes 22 seconds |
| Permanent Config: | Saved |
| **Network Settings** | |
| **Interface ap0** | |
| MAC Address: | 02:80:A3:F4:9C:89 |
| State: | Up |
| SSID: | xpr9C89 |
| Security Suite: | WPA2 |
| IP Address: | 192.168.1.1/24 |
| **Interface eth0** | |
| MAC Address: | 00:80:A3:F4:9C:8A |
| State: | Down |
| **Interface wlan0** | |
| MAC Address: | 00:80:A3:F4:9C:89 |
| Connection State: | Connected |
| Active WLAN Profile: | |
| Hostname: | |
| IP Address: | 192.168.1.15/24 |
| Default Gateway: | 192.168.1.1 |
| Domain: | |
| Primary DNS: | 192.168.1.1 |
| Secondary DNS: | <None> |
| IPv6 State: | Up |
| IPv6 Link Local Address: | fe80::280:a3ff:fef4:9c89 |
| IPv6 Global Address: | <None> |
| IPv6 Default Gateway: | <None> |
| **ConsoleFlow** | |
| State: | Disabled |
| **Line Settings** | |
| Line 1: | RS232, 460800, None, 8, 1, Hardware Protocol: None |
| Line gSPI_1: | Protocol: Command Line |
| Line gSPI_2: | Protocol: Command Line |
| Line gSPI_3: | Protocol: Command Line |
| Line gSPI_4: | Protocol: Command Line |

3. Use the assigned IP address to access the XPR web interface through Wi-Fi.

   In the example, you navigate to http://192.168.1.15/index.html.

4. If you want to assign a different IP address, use the steps in the **Modify Network Settings** screen.

5. Choose **Apply Settings**.
6. Remove the power from the cutting system.
7. Supply power to the cutting system.

The change goes into effect after you remove and then supply power to the cutting system.

## Change the limited AP settings

You can change the limited AP SSID, channel, and security settings in the **Connect** screen.

1. On the **Device Setup** screen, choose **Network** > **ap0** > **Link** > **Configuration**.

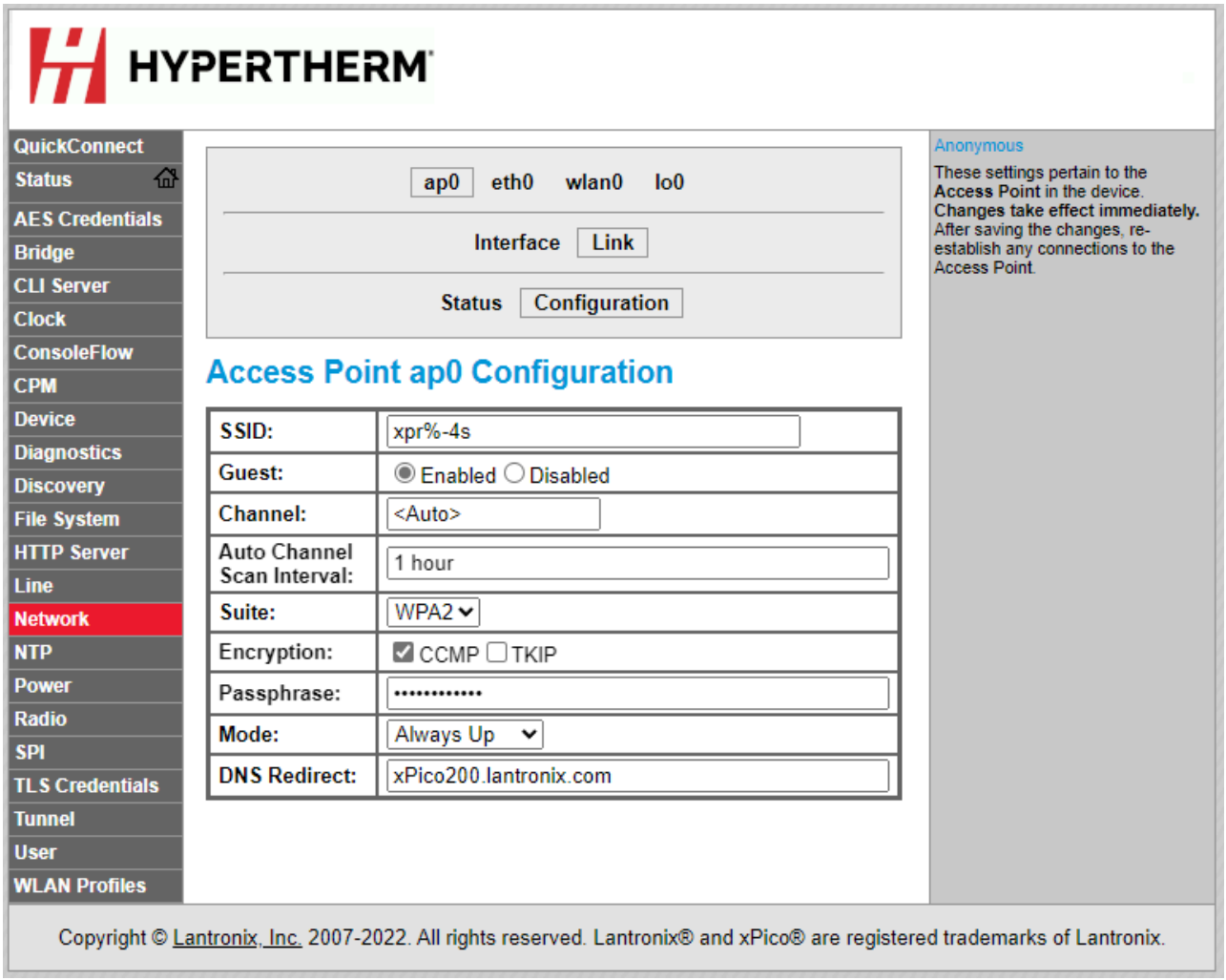


2. On the **Configuration** screen, change the settings.
3. Make sure that all of the settings are correct, then choose **Submit** to save and apply them.
4. Remove the power from the cutting system.
5. Supply power to the cutting system.

The change goes into effect after you remove and then supply power to the cutting system.

## Change the network settings

You can change the network settings on the **Device Setup** screen.

1. On the **Device Setup** screen, choose **Network** > **wlan0** > **Interface** > **Configuration**.

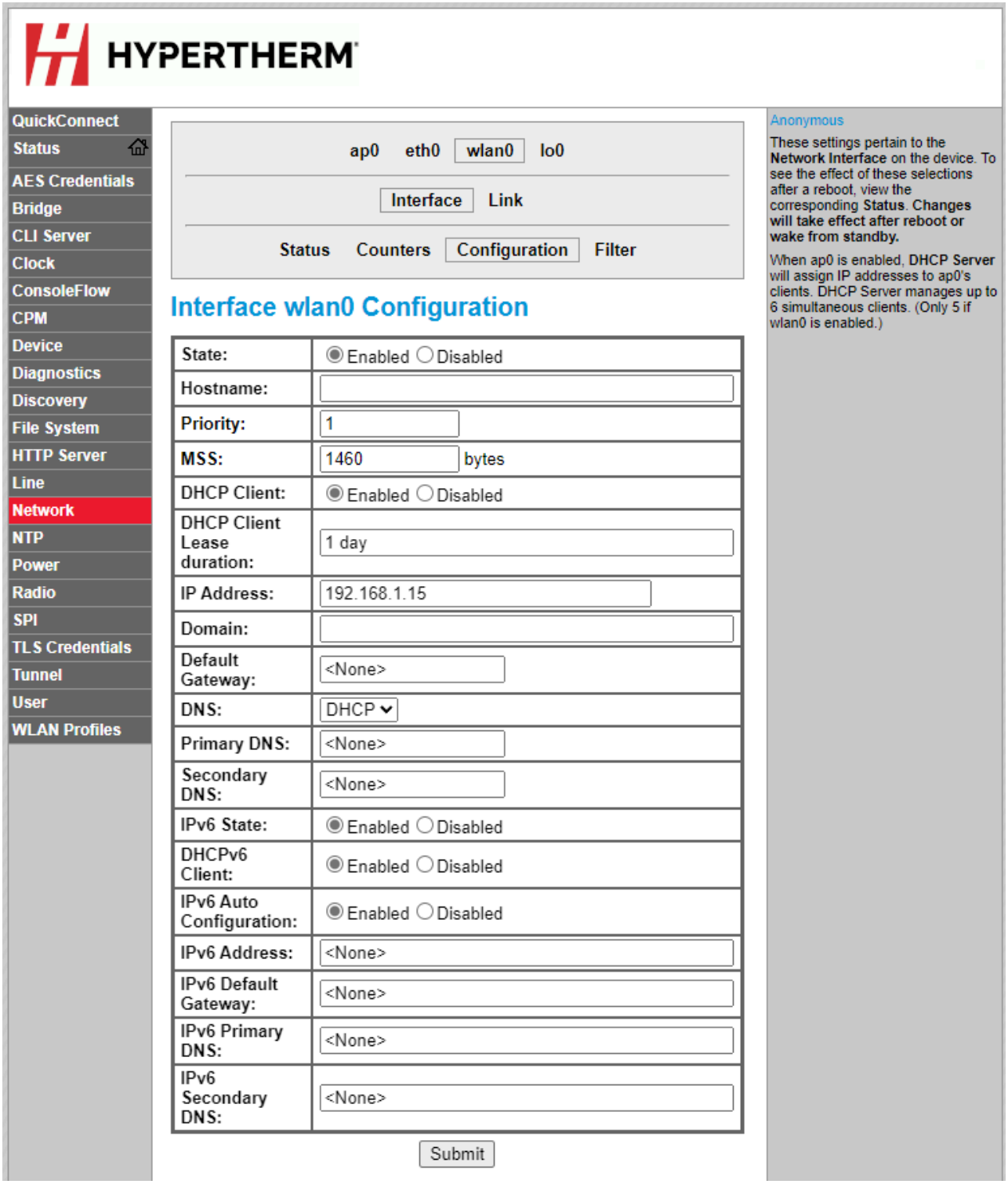


2. In the **Interface wlan0 Configurations** fields, change the settings.
3. Make sure that all of the settings are correct, then choose **Submit** to save and apply them.
4. Remove the power from the cutting system.

5. Supply power to the cutting system.

The change goes into effect after you remove and then supply power to the cutting system.

## Reset the wireless module

It is possible to make mistakes when you set up the wireless module. Use this procedure to set your wireless module to its default settings.

**WARNING**

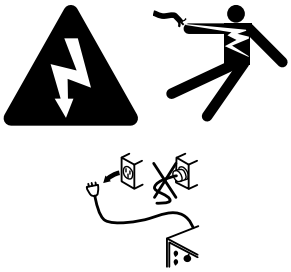

**ELECTRIC SHOCK CAN KILL**

The plasma power supply contains dangerous electric voltages that can seriously injure or kill you. Even if the plasma power supply is turned OFF, you can still get a serious electric shock if the plasma power supply remains connected to an electric power source.

Use extreme caution if you do diagnosis or maintenance tasks when the plasma power supply remains connected to an electric power source and the outer cover or panels are removed. All work that requires removal of the plasma power supply outer cover or panels must be done by a qualified technician. Refer to the *Safety and Compliance Manual (80669C)* for more safety information.

**WARNING**

**ELECTRIC SHOCK CAN KILL**

The plasma power supply contains dangerous electric voltages that can seriously injure or kill you. Even if the plasma power supply is turned OFF, you can still get a serious electric shock if the plasma power supply remains connected to an electric power source.

Use extreme caution if you do diagnosis or maintenance tasks when the plasma power supply remains connected to an electric power source and the outer cover or panels are removed.

1. Remove the power from the cutting system:
   a. Set the line-disconnect switch to the OFF position.

b. Make sure that the power-indicator LED on the plasma power supply is not illuminated.

2. Remove the control-side panel of the plasma power supply.
3. On the main control PCB, set position 4 on DIP switch S3 to the ON position.

   This disables the wireless connection.

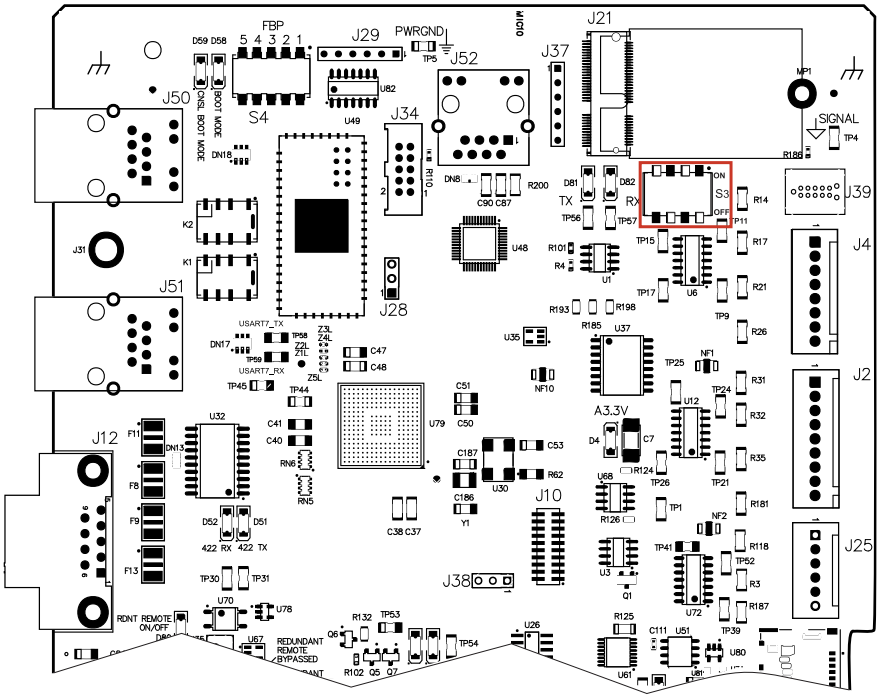


4. Supply power to the cutting system:
   a. Set the line-disconnect switch to the ON position.
   b. Make sure that the power-indicator LED on the plasma power supply is illuminated.

## ⚠ WARNING

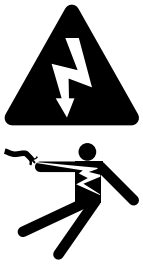

**ELECTRIC SHOCK CAN KILL**

The plasma power supply contains dangerous electric voltages that can seriously injure or kill you.

Use extreme caution if you do service or maintenance work on a plasma power supply when it is connected to an electric power source and the outer cover or panels are removed.

5. Wait 30 seconds.
6. Remove the power from the cutting system:
    a. Set the line-disconnect switch to the OFF position.
    b. Make sure that the power-indicator LED on the plasma power supply is not illuminated.
7. On the main control PCB, set position 4 on DIP switch S3 to the OFF position.

   This enables the wireless connection.
8. Install the control-side panel of the plasma power supply.
9. Supply power to the cutting system:
    a. Set the line-disconnect switch to the ON position.
    b. Make sure that the power-indicator LED on the plasma power supply is illuminated.
10. Wait 60 seconds.

    The wireless module is now set to the factory default settings.

## Disable the wireless connection temporarily

If you want to disable the wireless connection temporarily, use this procedure.

Before you begin:

**WARNING**

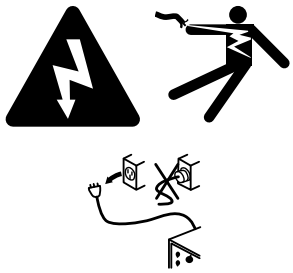

**ELECTRIC SHOCK CAN KILL**

The plasma power supply contains dangerous electric voltages that can seriously injure or kill you. Even if the plasma power supply is turned OFF, you can still get a serious electric shock if the plasma power supply remains connected to an electric power source.

Use extreme caution if you do diagnosis or maintenance tasks when the plasma power supply remains connected to an electric power source and the outer cover or panels are removed. All work that requires removal of the plasma power supply outer cover or panels must be done by a qualified technician. Refer to the *Safety and Compliance Manual (80669C)* for more safety information.

## ⚠ WARNING

**ELECTRIC SHOCK CAN KILL**

The plasma power supply contains dangerous electric voltages that can seriously injure or kill you. Even if the plasma power supply is turned OFF, you can still get a serious electric shock if the plasma power supply remains connected to an electric power source.

Use extreme caution if you do diagnosis or maintenance tasks when the plasma power supply remains connected to an electric power source and the outer cover or panels are removed.

1. Remove the power from the cutting system:
   a. Set the line-disconnect switch to the OFF position.
   b. Make sure that the power-indicator LED on the plasma power supply is not illuminated.
2. Remove the control-side panel of the plasma power supply.
3. On the main control PCB, set position 4 on DIP switch S3 to the ON position.

   This disables the wireless.

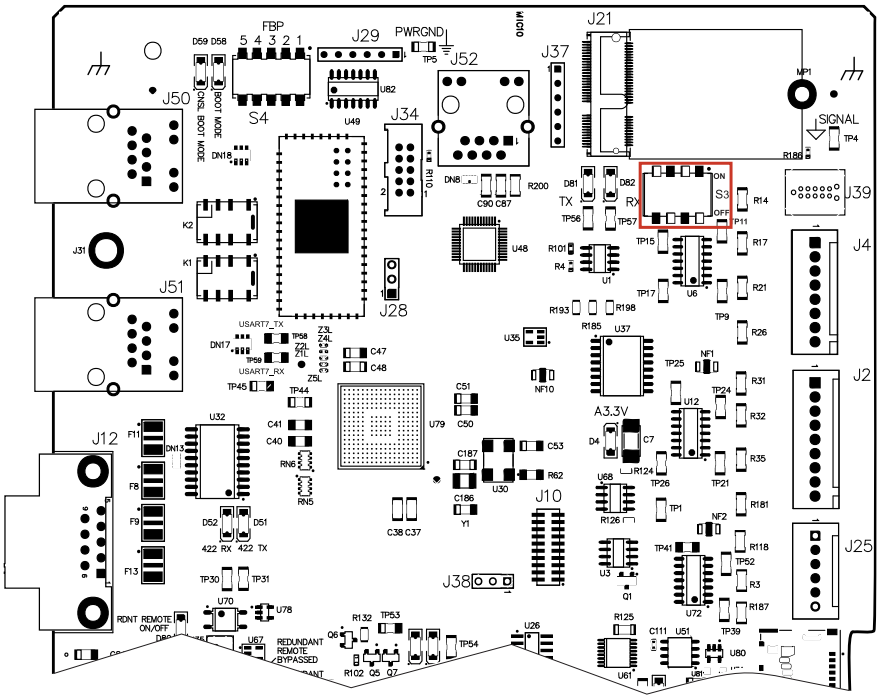


4. Install the control-side panel of the plasma power supply.

5. Supply power to the cutting system:
    a. Set the line-disconnect switch to the ON position.
    b. Make sure that the power-indicator LED on the plasma power supply is illuminated.

## Disable the wireless connection permanently

If you want to disable the wireless connection permanently, use this procedure.

Before you begin:

**WARNING**

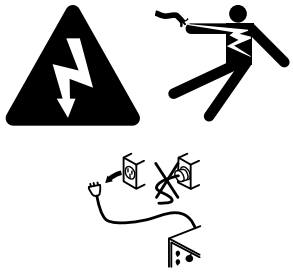

**ELECTRIC SHOCK CAN KILL**

The plasma power supply contains dangerous electric voltages that can seriously injure or kill you. Even if the plasma power supply is turned OFF, you can still get a serious electric shock if the plasma power supply remains connected to an electric power source.

Use extreme caution if you do diagnosis or maintenance tasks when the plasma power supply remains connected to an electric power source and the outer cover or panels are removed. All work that requires removal of the plasma power supply outer cover or panels must be done by a qualified technician. Refer to the *Safety and Compliance Manual (80669C)* for more safety information.

**WARNING**

**ELECTRIC SHOCK CAN KILL**

The plasma power supply contains dangerous electric voltages that can seriously injure or kill you. Even if the plasma power supply is turned OFF, you can still get a serious electric shock if the plasma power supply remains connected to an electric power source.

Use extreme caution if you do diagnosis or maintenance tasks when the plasma power supply remains connected to an electric power source and the outer cover or panels are removed.

1. Remove the power from the cutting system:
   a. Set the line-disconnect switch to the OFF position.
   b. Make sure that the power-indicator LED on the plasma power supply is not illuminated.
2. Remove the control-side panel of the plasma power supply.
3. On the main control PCB, find the Wi-Fi module in the J21 connector.
4. Remove the antenna from the rear panel of the plasma power supply, and remove the antenna connection from the Wi-Fi module on the main control PCB.
5. Use a #0 Phillips® screwdriver to remove the screw that holds the Wi-Fi module on the main control PCB.

   As you loosen the screw, the Wi-Fi module can move away from the main control PCB.
6. Use your fingers to lift the Wi-Fi module off the J21 connector and out of the plasma power supply.
7. Install the control-side panel of the plasma power supply.
8. Supply power to the cutting system:
   a. Set the line-disconnect switch to the ON position.
   b. Make sure that the power-indicator LED on the plasma power supply is illuminated.

## Web interface screen information

If you replace the control PCB, the information on the PCB changes. This includes the MAC address, System ID, passwords, and network information.

## System ID

This is the identifier for the plasma power supply. It is the last four digits of the MAC address. The MAC address is on a label on the Wi-Fi module and on a label on the rear of the plasma power supply.

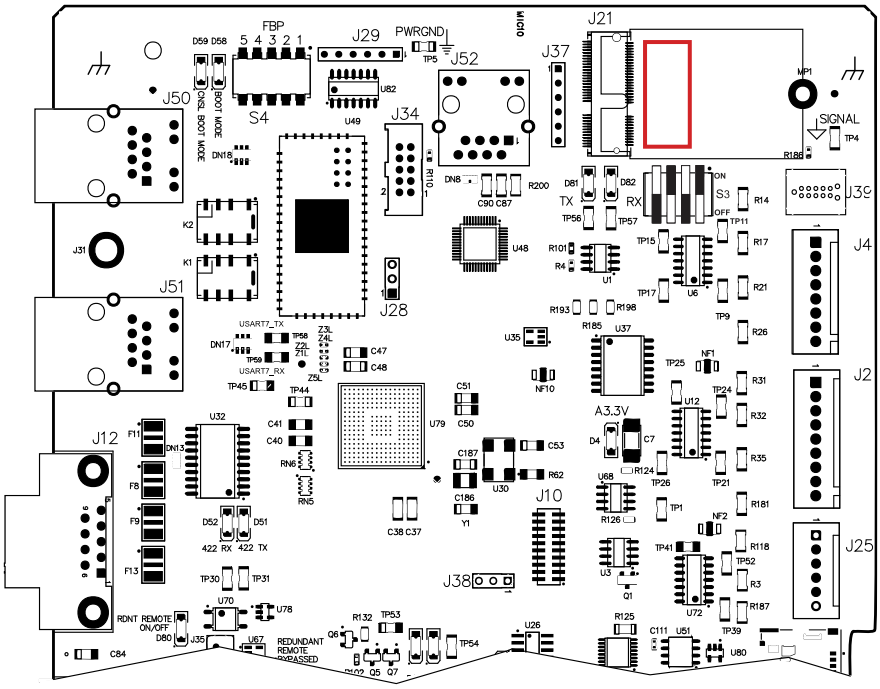


## Operator ID

This is the identifier for the device or client that has control of the plasma power supply. The first part of the Operator ID shows the type of connection that sent a process, **WiFi** for wireless, **Uart 422** for serial RS-422, or **EtherCAT** for EtherCAT.

Client ID: WiFi 97371758
Operator ID: No User
System ID: 99CD
State: Wait for start
Connection: Good

To change which device has control of the plasma power supply, refer to Change the device that has control on page 197.

### Client ID

This is the identifier for a device that communicates with the plasma power supply. This ID uses the Coordinated Universal Time (UTC) timestamp and is saved in a browser cookie.

If the Client ID and the Operator ID are the same on your device, you are in control of the plasma power supply.

### Connection

This is the status of the communication between the device and the plasma power supply. (Good or Error.)

## Plasma power supply screen

On this screen you can monitor the status of the plasma power supply. This screen also shows a list of inputs and outputs. When an input or output is active, the screen shows it as red or gray.

**Figure 48 -** Example of the plasma power supply screen

Status

| | |
|---|---|
| **Type** | XPR OptiMix |
| **State** | Wait for start |
| **Log** | 0 |
| **Process** | 2053 - 130A Mix/$N_2$ |
| **Arc Time** | 0d 0h 20min 51s |
| **(+) DC** | 300 A |
| **Coolant Flow** | 7.96 lpm (2.1 gpm) |
| **Coolant Level** | Low |

IO

| **Inputs** |
|---|
| On Switch |
| Start |
| Hold |
| Pierce |

| **Outputs** |
|---|
| Main Contactor |
| Coolant Pump |
| Coolant Solenoid |
| Magnetics Fans |
| Heat Exchanger Fans |
| Ready for Start |
| Ohmic Contact |
| Motion |
| Hold |
| Error |

Fan Speed

| | |
|---|---|
| **Heat Exchanger 1** | 2950 rpm |
| **Heat Exchanger 2** | 2951 rpm |
| **Magnetics 1** | 2952 rpm |
| **Magnetics 2** | 2953 rpm |
| **Control Side 1** | 6150 rpm |
| **Control Side 2** | 6250 rpm |

Temperature

| | |
|---|---|
| **Coolant** | 24.9 °C (77 °F) |
| **Transformer** | 26 °C (79 °F) |
| **Inductor 1** | 25.1 °C (77 °F) |
| **Inductor 2** | 25.2 °C (77 °F) |
| **Inductor 3** | 25.3 °C (78 °F) |
| **Inductor 4** | 25.4 °C (78 °F) |

Chopper

| | **Setpoint** | **DC** | **Temperature** |
|---|---|---|---|
| **Chopper 1** | 150 A | 151 A | 69 °C (156 °F) |
| **Chopper 2** | 150 A | 149 A | 70 °C (158 °F) |

| | |
|---|---|
| **Arc Voltage** | 126 V |
| **Bus Voltage** | 325.8 V |

The XPR web interface shows different fields for different XPR models. The screen shown is for reference only.

## Gas system screen

On this screen you can monitor the status of the TorchConnect console and the gas connect console. You can also see which valves are active when the gas is flowing.

There are two view options for this screen.

### Text view

In text view, text identifies real-time gas pressures and currently active valve states. When a valve is active, the screen shows it as gray.

Both bar and psi units of measure are shown on this screen.

### Diagram view

In diagram view a diagram shows:

- Real-time gas pressures and currently active valve states.
- Pressurized volumes and energized valves that show color when active and lines that change thickness as the amount of pressure changes.
- Pressure measurements and setpoints near the proportional valves and duty cycle (PWM) sensors identified by the diagram.

This screen gives you the option to show either bar or psi units of measure.

You can do four tests from this screen:

- Test Preflow
- Test Cutflow
- Test Pierceflow
- Gas Leak Test

The gas leak test can be done with all gas connect consoles. Refer to Do a gas leak test on page 295.

The test starts when you choose the button. When the button is active, the screen shows it as red. Active valves show gray. The gases on Line A, Line B, and shield align with the process ID that you selected. The gases flow for 60 seconds unless you choose the same button or choose another button that stops the test.

**Figure 49 -** Example text-view screen that shows the gas system status

| | |
|---|---|
| TEST PREFLOW | TEST PIERCEFLOW |
| TEST CUTFLOW | GAS LEAK TEST |

DIAGRAM VIEW

Torch Connect

| | Type | Setpoint | Output | | Inlet | | PWM | |
|---|---|---|---|---|---|---|---|---|
| **Line A** | Mix | 0.00 bar (0 psi) | P5 | 4.21 bar (61 psi) | P2 | 7.72 bar (112 psi) | B3 | 0% |
| **Line B** | $N_2$ | 0.00 bar (0 psi) | P3 | 0.00 bar (0 psi) | P1 | 7.58 bar (110 psi) | B1 | 0% |
| **Shield** | Air | 2.41 bar (35 psi) | P14 | 2.48 bar (36 psi) | P4 | 7.79 bar (113 psi) | B2 | 28% |

**Valve States** V1 V4 V5 V6 V7 V8 V9 V10 V11 V12

OptiMix

| | Setpoint | Output | | Inlet | | PWM | |
|---|---|---|---|---|---|---|---|
| **$H_2O$** | 0.00 bar (0 psi) | P9 | 0.00 bar (0 psi) | P8 | 2.41 bar (35 psi) | B5 | 0% |
| **F5** | 0.00 bar (0 psi) | P7 | 0.00 bar (0 psi) | P6 | 7.93 bar (115 psi) | B4 | 0% |
| **$H_2$** | 25 slpm | MF4 | 26 slpm | P10 | 7.93 bar (115 psi) | B8 | 75% |
| **Ar** | 15 slpm | MF5 | 16 slpm | P11 | 7.58 bar (110 psi) | B9 | 35% |
| **$N_2$** | 35 slpm | MF6 | 36 slpm | P12 | 8.62 bar (125 psi) | B10 | 65% |

**Outlet Pressure** P21 3.79 bar (55 psi)

**Figure 50 -** Example diagram-view screen that shows the gas system status

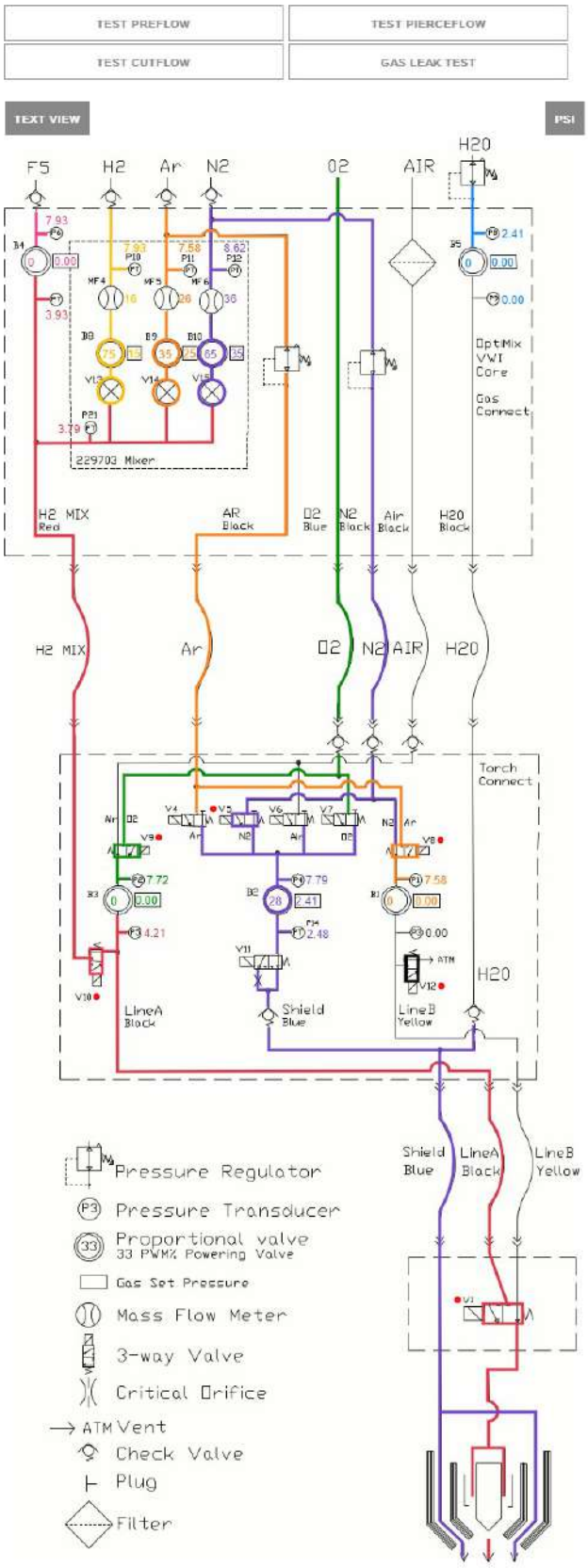

## Log screen

On this screen you can monitor active diagnostic codes and see diagnostic code history.

There are four categories of codes: information, alert, error, and failure. Refer to Diagnostic codes on page 278 for definitions.

**Figure 51 -** Example of a log screen

Active

| Class | ID | On Time | Description | Details |
|---|---|---|---|---|
| Failure | 513 | 0d 15h 39min 4s | Main->TCC CAN t/o | N/A |
| Failure | 503 | 0d 15h 38min 35s | TCC->Main CAN t/o | hf:49677ms |
| Alert | 531 | 0d 15h 38min 17s | Low psi-Line B | pres:38psi ref:53psi |
| Alert | 770 | 0d 15h 37min 50s | Gas Inlet - $N_2$ Line B | p1:79psi ref:80psi |
| Error | 691 | 0d 15h 37min 7s | Node reset | id:1 rcc:0x2e hf:27999ms |
| Error | 691 | | Node reset | |

History

| Class | ID | On Time | Description | Details |
|---|---|---|---|---|
| Info | 647 | 0d 15h 37min 7s | Process selected | id:1001 |
| Info | 643 | 0d 15h 36min 43s | No process loaded | N/A |
| Info | 642 | 0d 15h 36min 41s | System powered | N/A |
| Error | 691 | 0d 15h 36min 40s | Node reset | id:1 rcc:0x2e hf:999ms |

## Operate screen

On this screen, if you have the device that is in control of the plasma power supply, you can select a process ID that aligns with the material, thickness, and process type.

You can customize some parameters by choosing the **+** to open the menu. The plasma power supply keeps this customization until the remote on-off switch is set to OFF or the power is removed from the plasma power supply. The customization is also reset when you select a new process.

**Figure 52 -** Example of an Operate screen

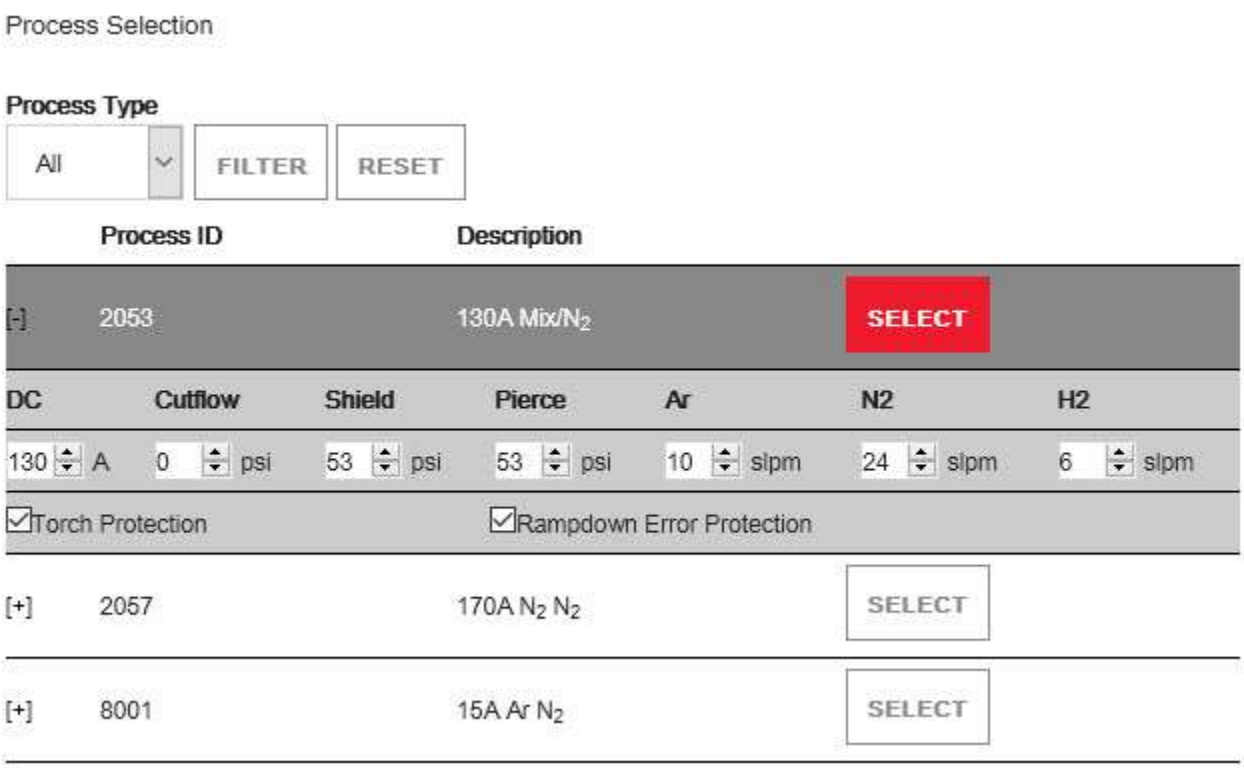


## Other screen

On this screen you can see the software versions and monitor the status of the wireless connection. You can also select the **Configure**, **Connect**, and **Update** commands.

### Configure

On this screen you can change the connection name, limited AP password, limited AP IP address, or the setup password.

- You cannot use special characters in any of the fields on this screen.
- The connection name must be less than 32 characters long.
- Passwords must be between 8 – 20 characters long.
- Passwords are case sensitive.

### Connect

On this screen you can change your client settings and connect to other networks. For information about how to do this, refer to Use network mode to connect on page 171.

### Update

On this screen you can update the web interface and firmware. For information about how to do this, refer to *CNC Communication Protocol for the XPR Cutting System (809810)* .

**Figure 53 -** Example of an Other screen

The XPR web interface shows different fields for different models. The screen shown is for reference only.

## Change the device that has control

Use these steps to make sure that the correct device has control of the plasma power supply.

The device that first sets a process controls the plasma power supply. For example, if the CNC sets the process, all other devices that connect to the plasma power supply after the CNC sets the process can only monitor the data.

If the **Client ID** and the **Operator ID** in the XPR web interface are the same on your device, you are in control of the plasma power supply.

1. Remove the power from the cutting system:
   a. Set the line-disconnect switch to the OFF position.
   b. Make sure that the power-indicator LED on the plasma power supply is not illuminated.
2. Supply power to the cutting system:
   a. Set the line-disconnect switch to the ON position.
   b. Make sure that the power-indicator LED on the plasma power supply is illuminated.
3. To select the device that has control of the plasma power supply, send a process.

# Use ohmic contact sense

You can use internal or external ohmic contact sense. No action is necessary for internal ohmic contact sense. To use external ohmic contact sense, make the following modification to the ohmic wiring inside of the TorchConnect console.

When you work with ohmic contact sense, it helps to know the following conditions related to ohmic relays:

- The ohmic relay is usually open when not powered.
- The ohmic relay is closed and ohmic contact is enabled, except during ignition or when:
  - Cutting with a water process, or
  - The remote on-off switch is in the OFF position.
- With external ohmic contact sense, the relay is still used to help isolate the ohmic circuit from high voltage.

1. Remove the power from the cutting system:
   a. Set the line-disconnect switch to the OFF position.
   b. Make sure that the power-indicator LED on the TorchConnect console is not illuminated.
2. Disconnect the ohmic wire from J3 on the ohmic PCB in the TorchConnect console.
3. Connect the ohmic wire that you removed from J3 to J4 pin 1.
4. Do you have a third-party ohmic circuit?

| | |
|---|---|
| If yes... | Remove the plug from the sheet metal on the TorchConnect console to get access to the ohmic wire inside. The plug is below the torch lead connection, as shown. |

| | |
|---|---|
| If no... | Go to the next step. |

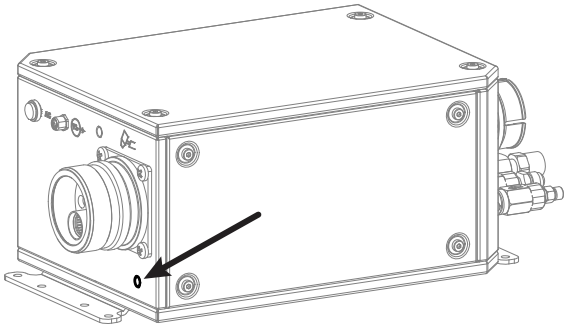

5. Connect the ohmic wire from the ohmic relay to J4 pin 2 on the ohmic PCB in the TorchConnect console.
6. Connect the ohmic wire to the PCB connection for ohmic inside the torch lifter.

   Refer to Example of external ohmic contact sense on page 200.

## Example of internal ohmic contact sense

Internal ohmic contact sense is the default installation for the torch and the TorchConnect console. No more steps are necessary.

**Figure 54 -** Example diagram of internal ohmic contact sense

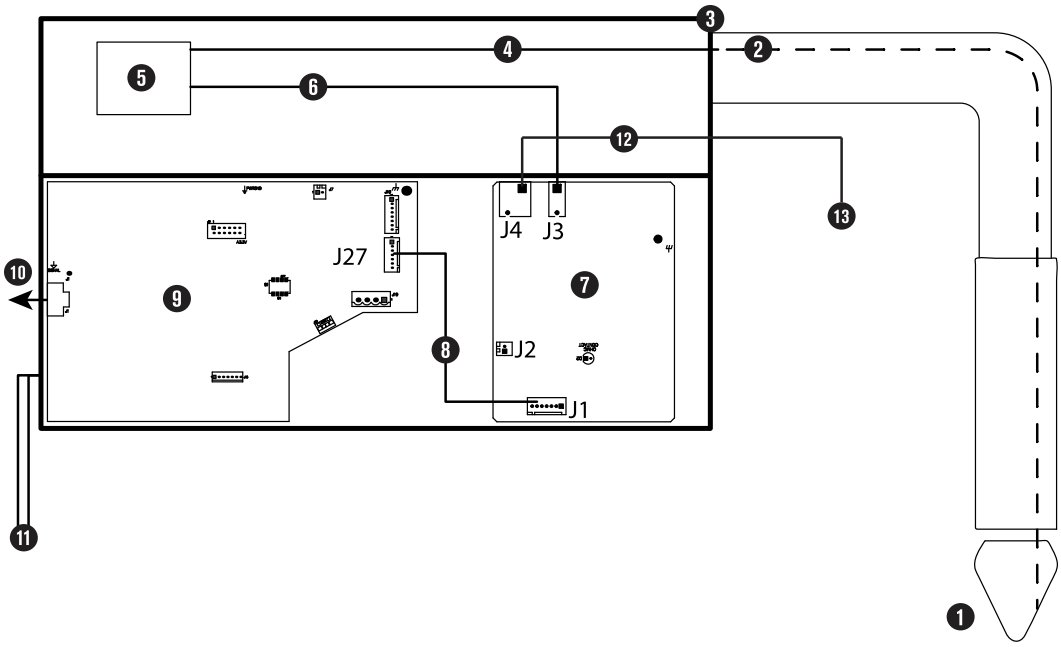

**Figure 54 -** Example diagram of internal ohmic contact sense (continued)

1 Torch
2 Ohmic wire, inside of torch and torch lead
3 TorchConnect console
4 Ohmic wire, torch receptacle to ohmic relay
5 Ohmic relay
6 Ohmic wire, ohmic relay to J3
7 Ohmic PCB
8 J1 to J27 wires
9 Control PCB
10 CAN connection
11 Two ground connections (mandatory)
12 Ohmic wire, J4 to torch lifter or third-party ohmic circuit: pin 1 and pin 2 are connected in the ohmic PCB
13 Torch lifter or third-party ohmic circuit

## Example of external ohmic contact sense

Refer to this example diagram if it is necessary to change the wiring inside of the TorchConnect console so that you can use external ohmic contact sense.

**Figure 55 -** Example diagram of external ohmic contact sense

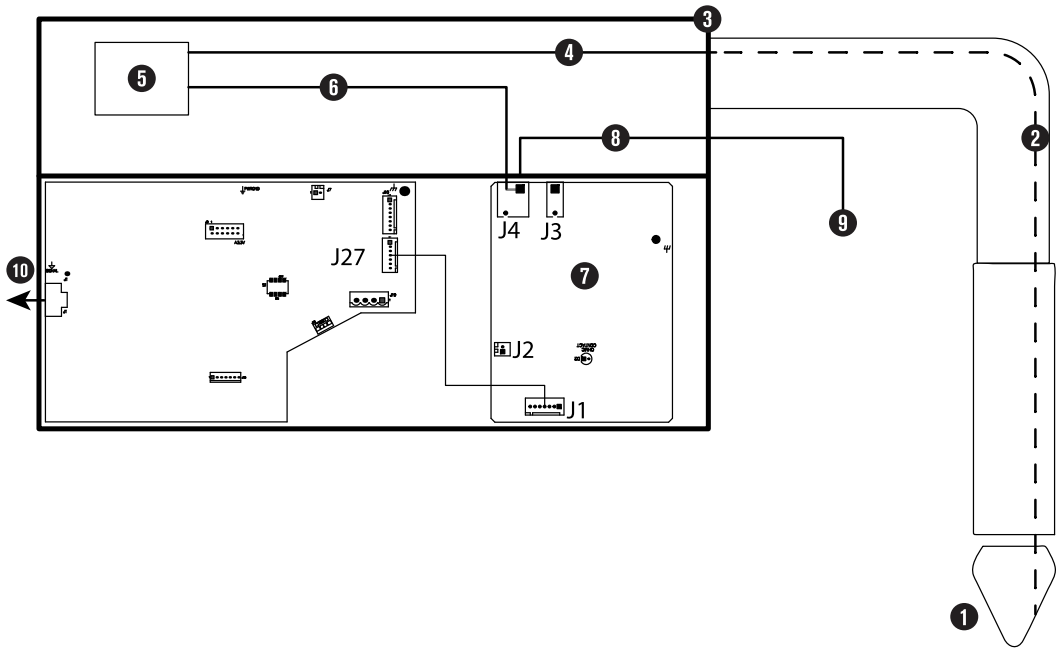

**Figure 55 -** Example diagram of external ohmic contact sense (continued)

1. Torch
2. Ohmic wire, inside of torch and torch lead
3. TorchConnect console
4. Ohmic wire, torch receptacle to ohmic relay
5. Ohmic relay
6. Ohmic wire, ohmic relay to J4
7. Ohmic PCB
8. Ohmic wire, J4 to torch lifter or third-party ohmic circuit: pin 1 and pin 2 are connected in the ohmic PCB
9. Torch lifter or third-party ohmic circuit
10. CAN connection

# Install a remote on-off switch

As an alternative to using the main power supply, do these steps to install your own remote on-off switch so that you can control power to the gas connect console, TorchConnect console, and other parts.

**⚠ WARNING**

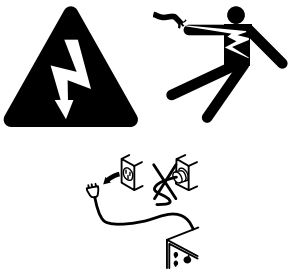

**ELECTRIC SHOCK CAN KILL**

The plasma power supply contains dangerous electric voltages that can seriously injure or kill you. Even if the plasma power supply is turned OFF, you can still get a serious electric shock if the plasma power supply remains connected to an electric power source.

Use extreme caution if you do diagnosis or maintenance tasks when the plasma power supply remains connected to an electric power source and the outer cover or panels are removed. All work that requires removal of the plasma power supply outer cover or panels must be done by a qualified technician. Refer to the *Safety and Compliance Manual (80669C)* for more safety information.

1. Remove the jumper from pin 1 and pin 2 of the J14 connector.

   For the pinout of J14, refer to Pinouts for the discrete interface cables on page 164.

2. Install your own interface.

Use the examples in Examples of input circuits on page 205 and Examples of output circuits on page 202 to design your circuit.

When the remote on-off switch is set to OFF (disabled), electric power stays ON (active) to the following parts:

- Power-indicator LED on the front of the plasma power supply
- Control PCB
- Control transformer (can be different on input and output)
- Input to the relay that controls the 48 V power supply
- 24 V power supply
- 120 V to the input side of the contactor or contactors
- 120 VAC
- 220 VAC on the power distribution PCB
- 120 VAC to the input side of the 40 V power relay
- 220 VAC to the input side of the cooler power relay

## Examples of output circuits

If it is necessary to design your own circuit to use the remote on-off feature, you can refer to these output circuit diagrams as examples.

There are three types of interfaces for output circuits. Be careful not to use an incorrect circuit.

It is the responsibility of the system integrator to make sure that circuit designs obey all applicable national and local codes.

### Logic interface, active high

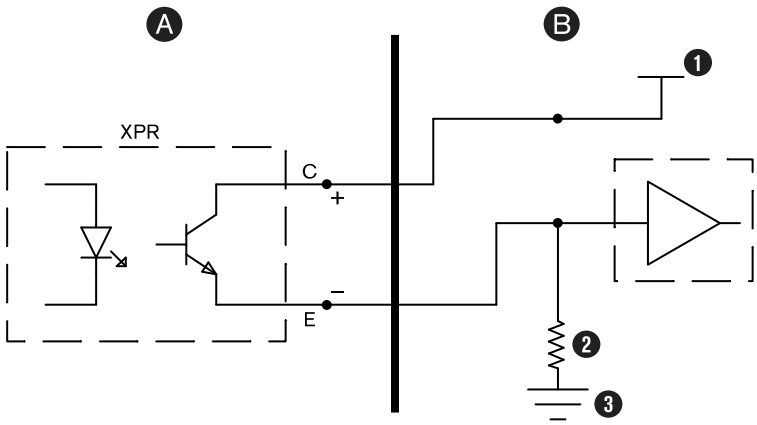

**A** XPR

**B** CNC

**1** 5 VDC – 24 VDC

**2** 10 kΩ (optional)

**3** High-impedance (≤ 10 mA)

## Logic interface, active low

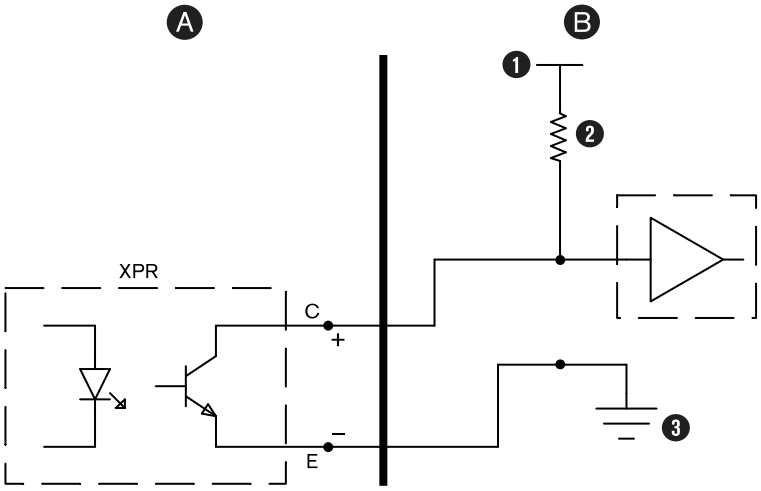


**A** XPR

**B** CNC

**1** 5 VDC – 24 VDC

**2** 10 kΩ (optional)

**3** High-impedance (≤ 10 mA)

## Relay interface

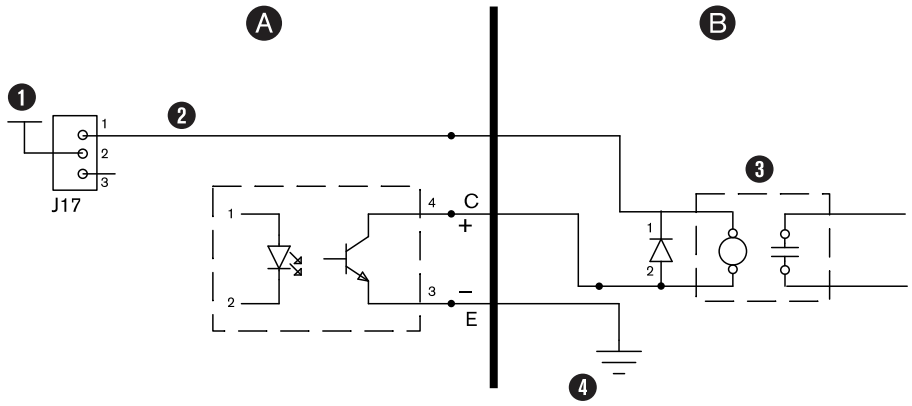


**A** XPR

**B** CNC

**1** +24V

**2** CNC +24 V

**3**
- External relay
- 24 VDC low-power coil
- ≤ 10 mA or ≥ 2400 Ω
- For all relay coils it is necessary to have a freewheeling diode across the relay coil.

**4** GND

## This circuit voids the warranty. Do not use.

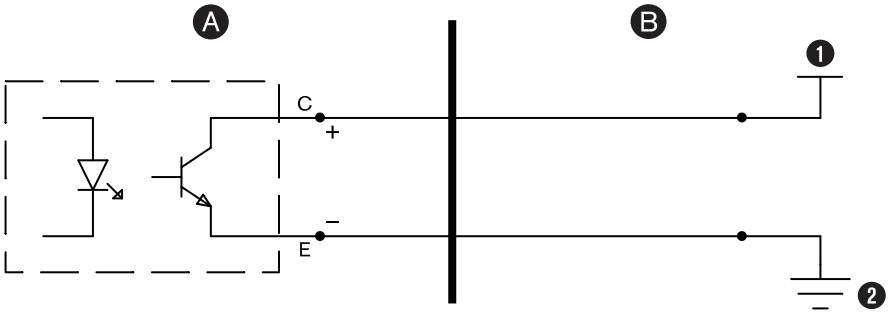


**A** XPR

**B** CNC

**1** Any voltage

**2** Power ground

# Examples of input circuits

If it is necessary to design your own circuit to use the remote on-off feature, you can refer to these input circuit diagrams as examples.

There are three types of interfaces for input circuits.

It is the responsibility of the system integrator to make sure that circuit designs obey all applicable national and local codes.

## Relay interface

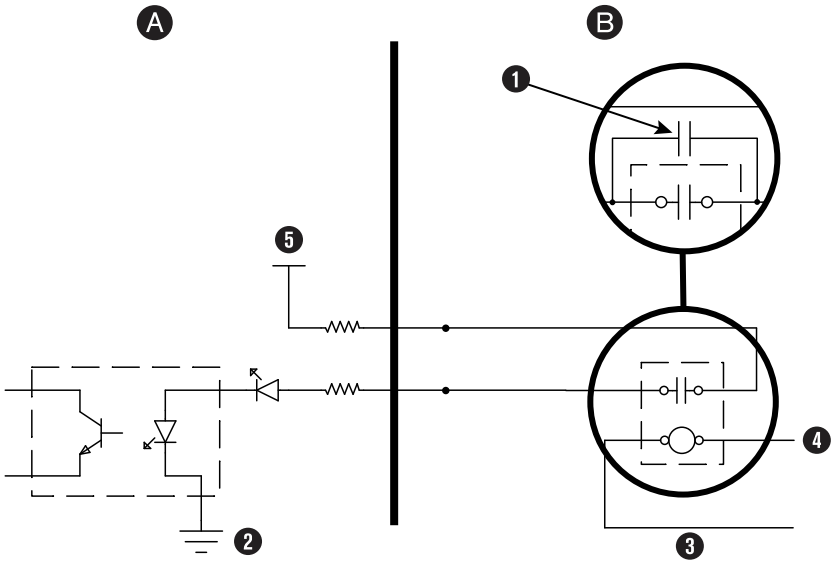


**A** XPR

**B** CNC

**1** The life of the external relay can be extended if you add a resistor-capacitor series in parallel with the relay contacts. A metalized-polyester capacitor – 0.022 µF 100 V or higher – is a good example.

**2** Power ground

**3** External relay (AC or DC)

**4** Output from CNC

**5** +24 VDC

## Optocoupler interface

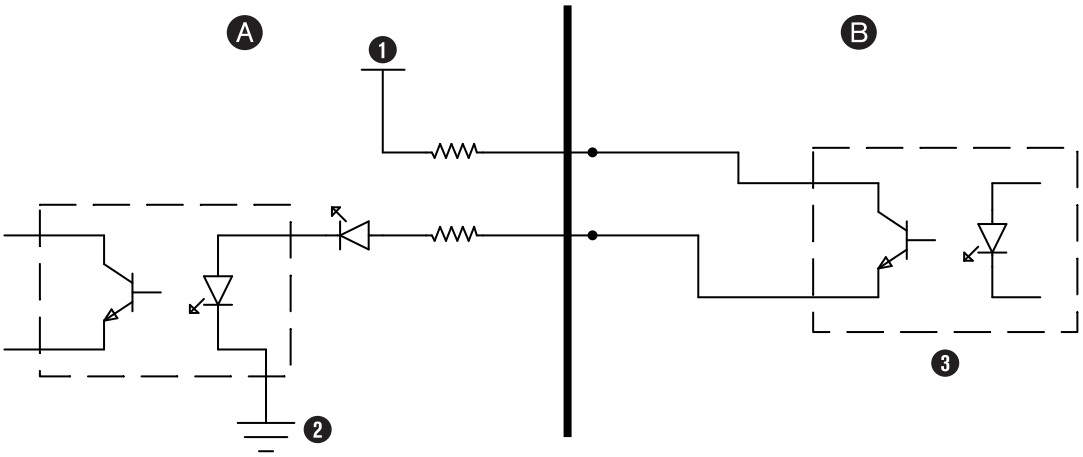


**A** XPR

**B** CNC

**1** +24 VDC

**2** Power ground

**3** Transistor-output optocoupler

## Amplified-output interface

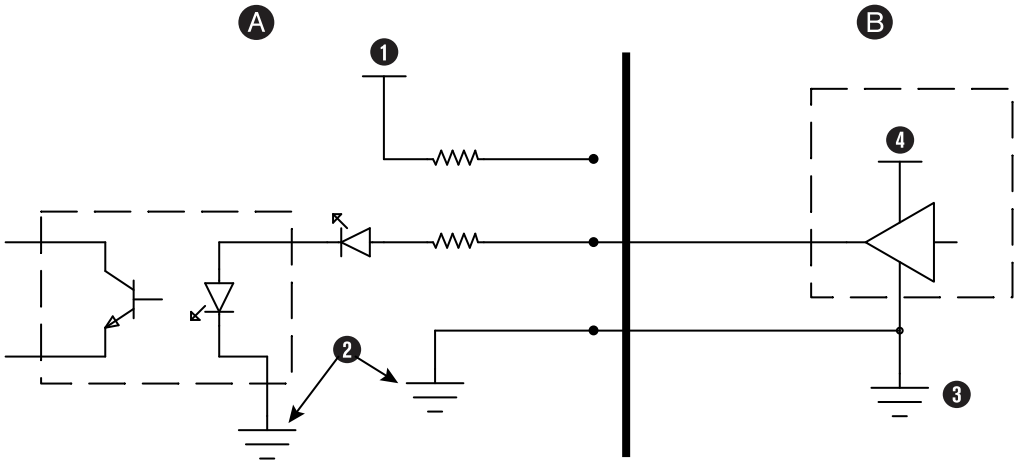


**A** XPR

**B** CNC

**1** +24 VDC

**2** CNC ground

**3** Active-high drive

**4** CNC 12 VDC – 24 VDC

### Redundant remote on-off example interface

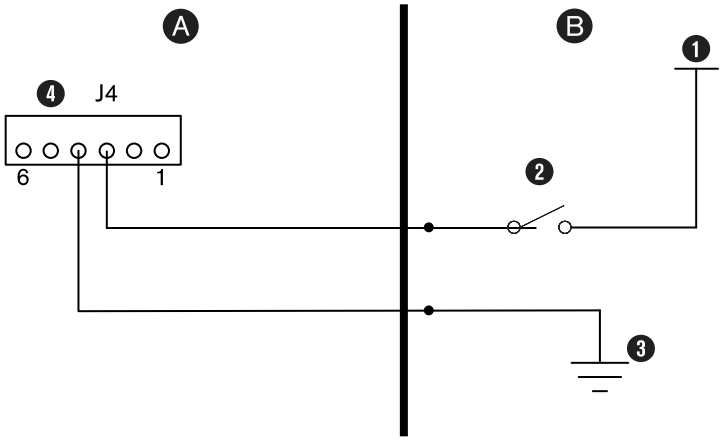


**A** XPR

**B** CNC

**1** +24 V

**2** Switch

**3** Ground

**4** XPR redundant remote on-off input

## Install a redundant remote on-off switch

Do these steps if you want to use the redundant remote on-off switch.

**WARNING**

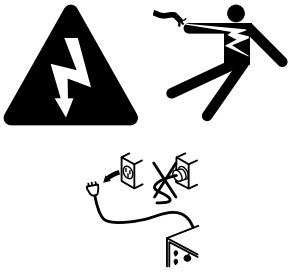

**ELECTRIC SHOCK CAN KILL**

The plasma power supply contains dangerous electric voltages that can seriously injure or kill you. Even if the plasma power supply is turned OFF, you can still get a serious electric shock if the plasma power supply remains connected to an electric power source.

Use extreme caution if you do diagnosis or maintenance tasks when the plasma power supply remains connected to an electric power source and the outer cover or panels are removed. All work that requires removal of the plasma power supply outer cover or panels must be done by a qualified technician. Refer to the *Safety and Compliance Manual (80669C)* for more safety information.

A feature of the control PCB is that it offers redundancy to a single remote on-off switch.

Before you begin:

- A 24 VDC (500 mA) and return (GND) from the CNC or controlling device to the expansion PCB are necessary for redundant remote on-off.
- Use a separate discrete cable between the redundant remote on-off input and the main control PCB.

1. Move the jumper from pin 1 and pin 2 of the J27 connector to pin 2 and pin 3.
2. Supply 24 V power from the CNC or controlling device to J4 pin 3 of the expansion PCB.
3. Install a return (GND) from the CNC or controlling device to J4 pin 4 of the expansion PCB.

When the redundant remote on-off feature is selected, signals from two remote on-off switches are necessary for the plasma power supply to work.

When the redundant remote on-off switch is set to OFF (disabled), electric power stays ON (active) to the following parts:

- Power-indicator LED on the front of the plasma power supply
- Control PCB
- Control transformer (can be different on input and output)
- Input to the relay that controls the 48 V power supply
- 24 V power supply
- 120 V to the input side of the contactor or contactors
- 120 VAC
- 220 VAC on the power distribution PCB
- 120 VAC to the input side of the 40 V power relay
- 220 VAC to the input side of the cooler power relay

# 5 Coolant Installation

## Overview of cutting system coolant

The cutting system ships **without** coolant in the reservoir. Before you operate the cutting system, you must fill it with coolant.

The coolant capacity for the plasma cutting system is between 22.7 liters – 45.4 liters (6 U.S. gallons – 12 U.S. gallons). The reservoir in the cooler can contain a maximum of 15.1 liters (4 U.S. gallons). But when the plasma cutting system is fully installed, it can contain between 22.7 liters – 45.4 liters (6 U.S. gallons – 12 U.S. gallons).

More coolant is necessary for a cutting system with long leads than for a cutting system with short leads.

Speak to your cutting machine supplier to send an order for more coolant. For information about how to calculate the approximate total volume of coolant for your cutting system, refer to Calculations for total coolant volume estimates on page 263.

The cutting system ships with the coolant filter and coolant-pump screen installed. Additional coolant filters and screens are available. Refer to Cooler parts on page 399.

For information about how to install a replacement coolant filter or coolant-pump screen, refer to the *XPR Preventative Maintenance Program (PMP) Instruction Manual (809490)*.

## Fill the cutting system with coolant

Use the correct amount and type of coolant mixture to help prevent damage to the cutting system.

## NOTICE

**LOW COOLANT LEVELS CAN DAMAGE THE CUTTING SYSTEM AND COOLANT PUMP**

There is a risk of serious damage to the cutting system and to the coolant pump if you operate the cutting system with no coolant or with low coolant. If your coolant pump is damaged, pump replacement can be necessary.

Never operate the cutting system if you get a low coolant level notice.

## NOTICE

**AUTOMOTIVE ANTIFREEZE CAN DAMAGE THE TORCH COOLANT SYSTEM**

Antifreeze contains chemicals that can damage the torch coolant system.

Never use automotive antifreeze in place of Hypertherm coolant.

## NOTICE

**USE THE CORRECT COOLANT**

If you use an incorrect coolant, it can cause damage to the cutting system.

Refer to the coolant requirement specifications for your plasma cutting system.

Before you begin:

- Calculate the correct percentage of propylene glycol to add in the premixed Hypertherm coolant (028872).
- Refer to Coolant requirements on page 57.

1. Make sure that you have the correct coolant mixture for your cutting system.
2. Remove the cap from the reservoir fill port inlet on top of the cooler.

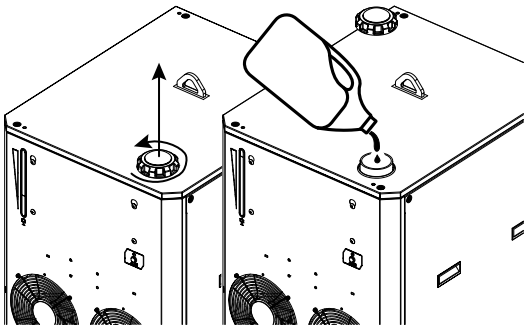

3. Look at the coolant-level view window to see if the reservoir is full.

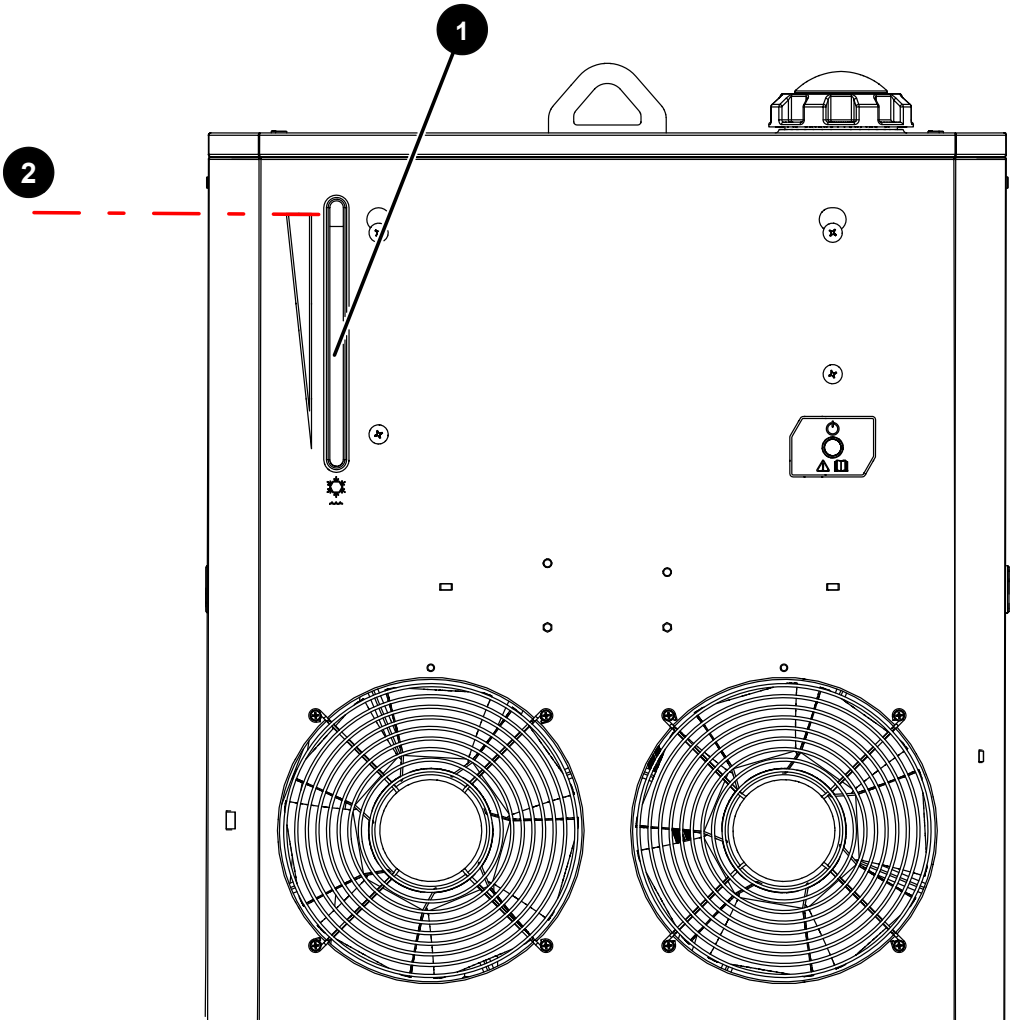


**1** Coolant-level view window

**2** Maximum fill line

4. Add the coolant in the reservoir until the coolant is at the recommended fill level.

You can see the coolant level from the view window on the front of the cooler as you add the coolant.

**CAUTION**

**WET FLOOR**

If you put too much coolant in the reservoir, the coolant can go through an overflow tube and come out at the bottom of the cooler. Coolant can cause floors to become slippery.

Be careful not to put too much coolant in the reservoir.

5. Install the cap onto the coolant reservoir.

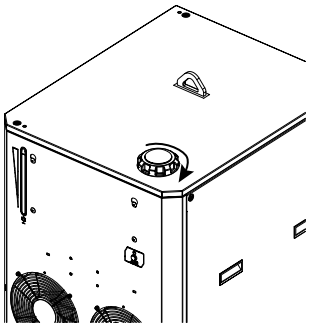

6. Supply power to the cutting system:
   a. Set the line-disconnect switch to the ON position.
   b. Make sure that the remote on-off switch is in the ON position.
   c. Make sure that the green power-indicator LED is illuminated on the cooler.

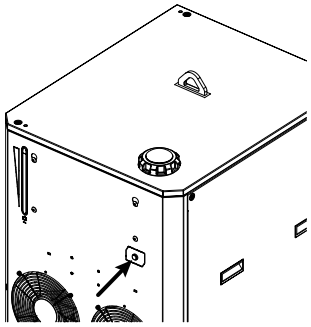

7. Use the CNC or XPR web interface to send a process to the plasma power supply and start the coolant pump.
   - When you send a process, the gases start to flow, and after a few seconds the coolant pump starts.

- ☐ If the pump stops, it is necessary to purge the air out of the coolant loop.
- ☐ Use the remote on-off switch to start and stop the coolant pump until the pump continues to run.

8. If necessary, add more coolant to fill the reservoir to the recommended fill level.

What to do next: After you add the coolant, use the CNC or XPR web interface to clear the process.

# 6 Operation

## CNC controls and display

A CNC controls cutting system operation.

The CNC has the following functions:

- Executes part programs from Computer-aided Design (CAD) and Computer-aided Manufacturing (CAM) software.
- Sends commands to the cutting system through a CNC interface cable (or wireless connection) between the CNC (or wireless device) and the plasma power supply.
- Adapts to feedback signals it receives from the cutting system or operator.

Some cutting system commands, settings, and displays can be seen and controlled from different CNC screens.

The power-indicator LED shows power status. All other visual indications of cutting system performance show on the CNC or the XPR web interface.

CNC interfaces can include these screens:

- Main (control) screen
- Process setup screen
- Diagnostic screen
- Test screen
- Cut chart screen

Refer to the instruction manual for your CNC for descriptions of CNC screens.

For information about how to use the CNC to control cutting system operation, refer to:

- The instruction manual for your CNC
- *CNC Communication Protocol for the XPR Cutting System (809810)*

# Wireless device controls

You can use a wireless device to set up and monitor the plasma cutting system.

A wireless device with the XPR web interface sends commands to the XPR cutting system through a wireless connection between the wireless device and the plasma power supply.

Some cutting system commands, settings, and displays can be seen and controlled from different XPR web interface screens. For information on these screens, refer to Web interface screen information on page 188.

For information about how to set up a wireless device with the XPR web interface, refer to Requirements for the XPR web interface on page 168.

# Power-indicator LEDs

An LED illuminates to show the power status on the plasma power supply and on other system components.

The power-indicator LED on the plasma power supply uses two colors to indicate power status:

- The LED illuminates amber when the plasma power supply is receiving electric power and the remote on-off switch or redundant remote on-off switch is in the OFF position.
- The LED illuminates green when the plasma power supply is receiving electric power and the remote on-off switch or redundant remote on-off switch is in the ON position.

**Figure 56 -** Power-indicator LED on the plasma power supply

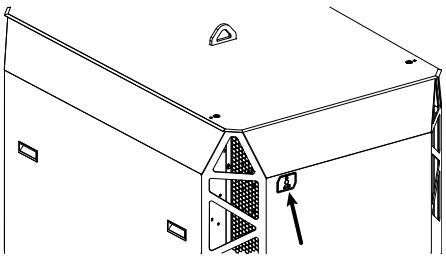

When illuminated, the green power-indicator LED on other components is an indication that:

- Power is supplied to the XPR cutting system.
- The line-disconnect switch or breaker for the component is set to the ON (I) position.

- The component can be used.

**Figure 57 -** Power-indicator LED locations on other components

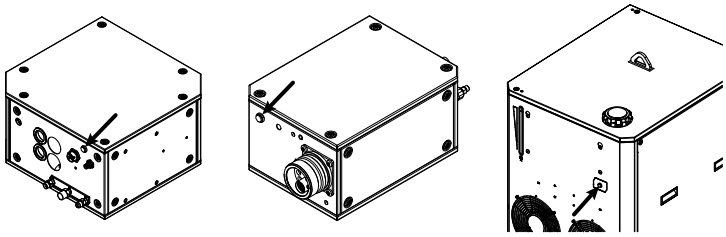

# Sequence of operation

A set of flowchart images shows the sequence of operation for the plasma cutting system.

Each state of operation is given a unique name and number so that it can be identified. The type of name that you see (name or number) is specified in your cutting system settings.

## Power-up state (1)

The Power-up state (1) process starts when the operator sets the remote on-off switch for the plasma cutting system to the ON position.

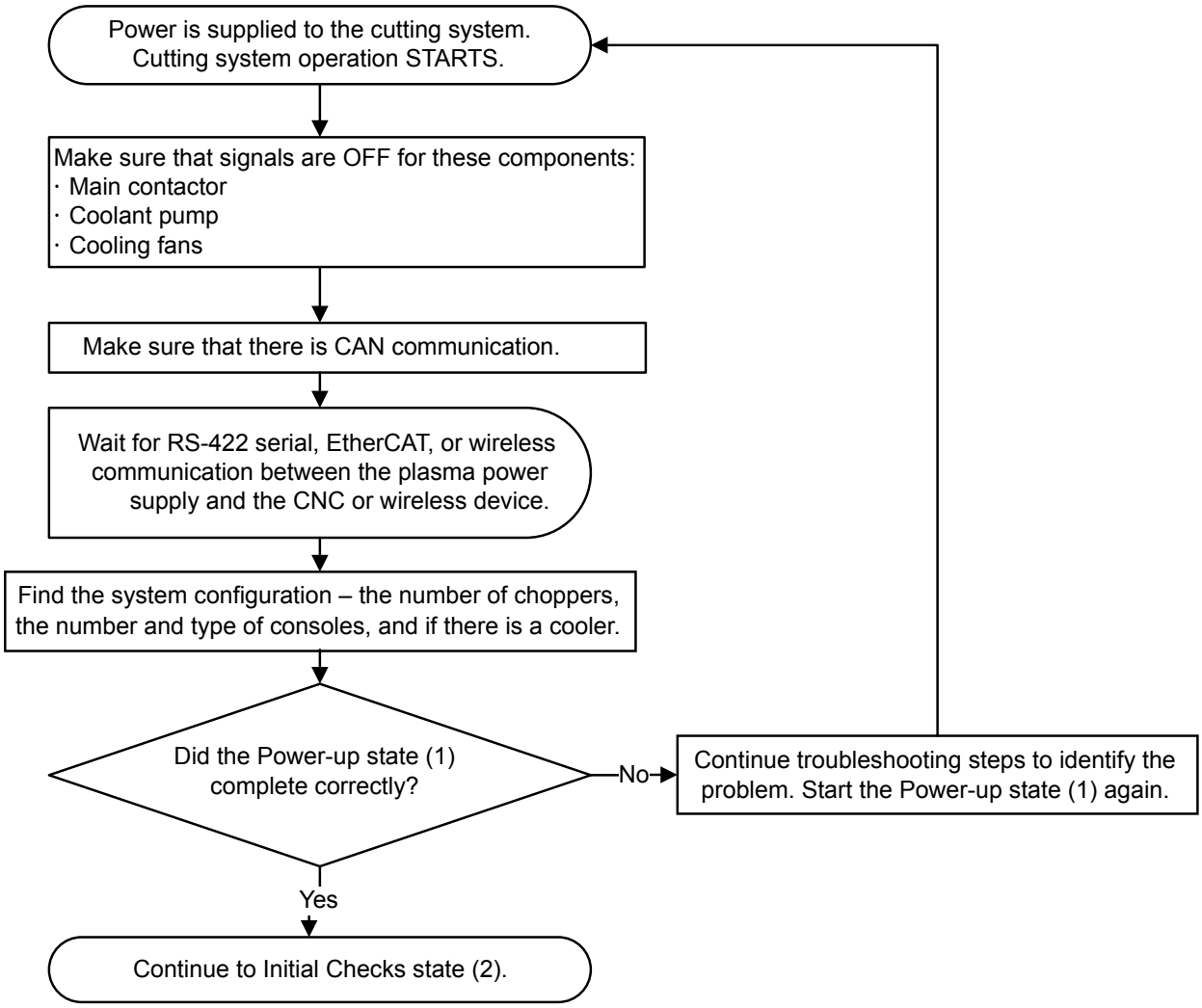


If the Power-up state (1) completes correctly, the process continues with Initial Checks state (2) on page 218.

Refer to Initial inspection steps on page 273 for troubleshooting procedures.

## Initial Checks state (2)

During the Initial Checks state (2), the system looks for diagnostic codes and gets temperature and inlet pressure measurements.

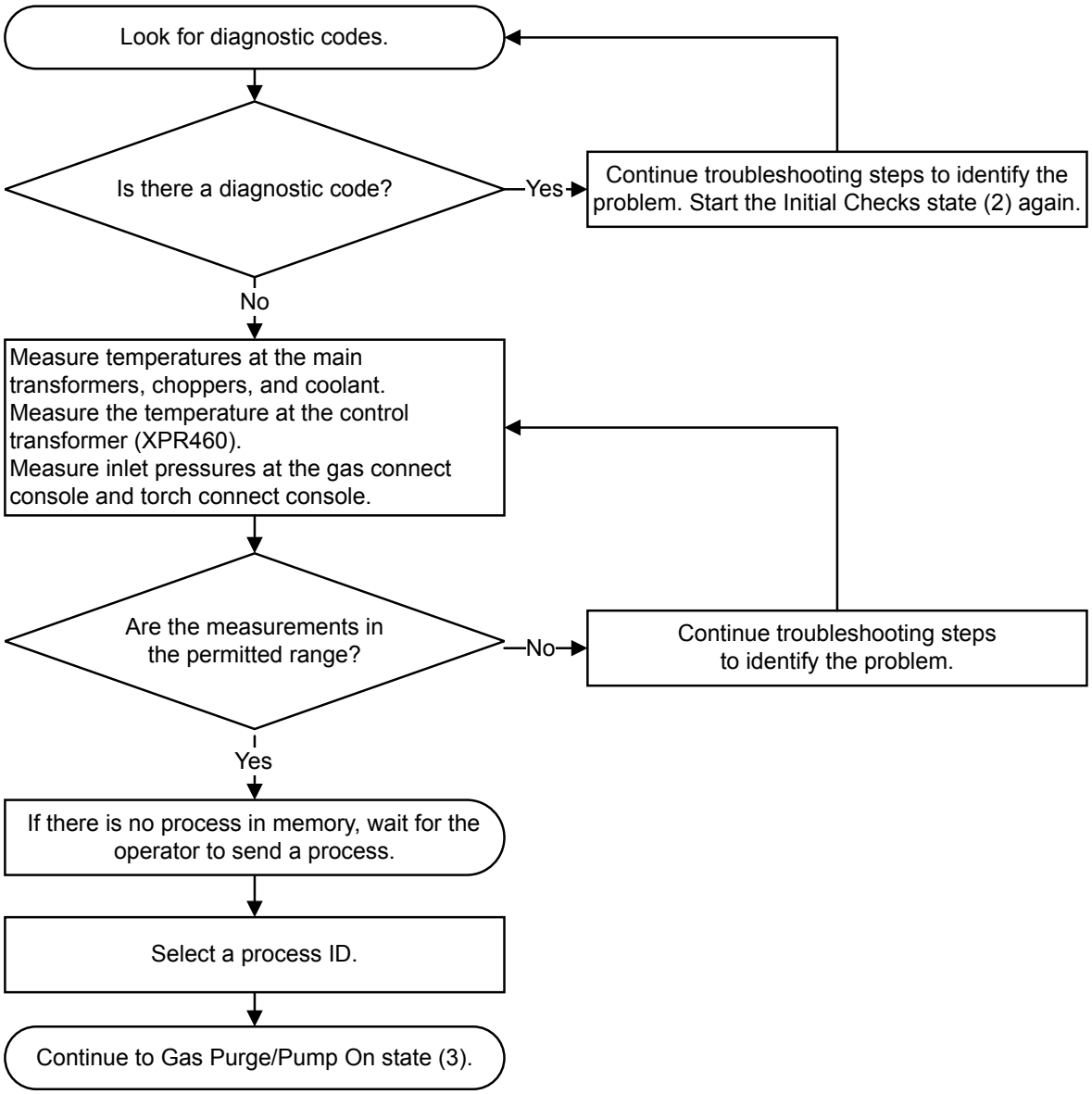


If the Initial Checks state (2) completes correctly, the process continues with Gas Purge/Pump On state (3) on page 219.

Refer to Initial inspection steps on page 273 for troubleshooting procedures.

## Gas Purge/Pump On state (3)

During the Gas Purge/Pump On state (3), the system does a specialty purge of gases and coolant and then does a check of the coolant flow.

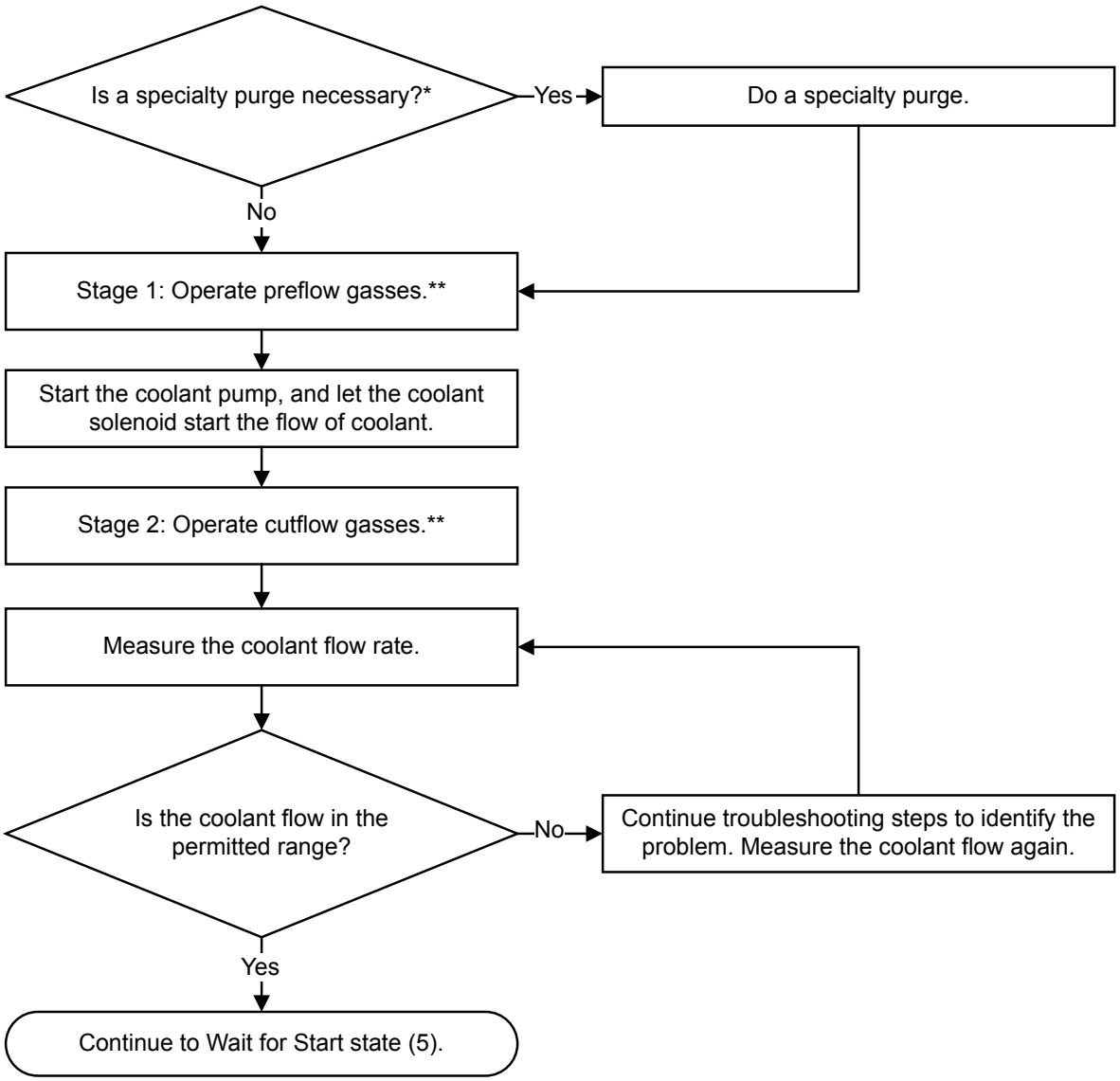


* A specialty purge (with $N_2$ or air) occurs automatically if the process changes from a non-mixed-fuel gas to a mixed-fuel gas or F5 process (or the opposite).

- If the process that was sent before was a water ($H_2O$) process, a water purge is added to the gas purge. Refer to Automatic purges on page 229.
- If the process that was sent before was not an $H_2O$, mixed-fuel gas, or F5 process, do the usual two-step gas purge.

** These conditions have an effect on the time that is necessary to complete a purge:

- The type of operator-selected process that the CNC or wireless device sends to the cutting system
- If this is the first process sent after the Power-up state (1) starts
- The type of operator-selected process that was sent before

If the Gas Purge/Pump On state (3) completes correctly, the process continues with Wait for Start state (5) on page 221.

Refer to Initial inspection steps on page 273 for troubleshooting procedures.

## Wait for Start state (5)

During the Wait for Start state (5), the CNC sends the Plasma Start command to the cutting system.

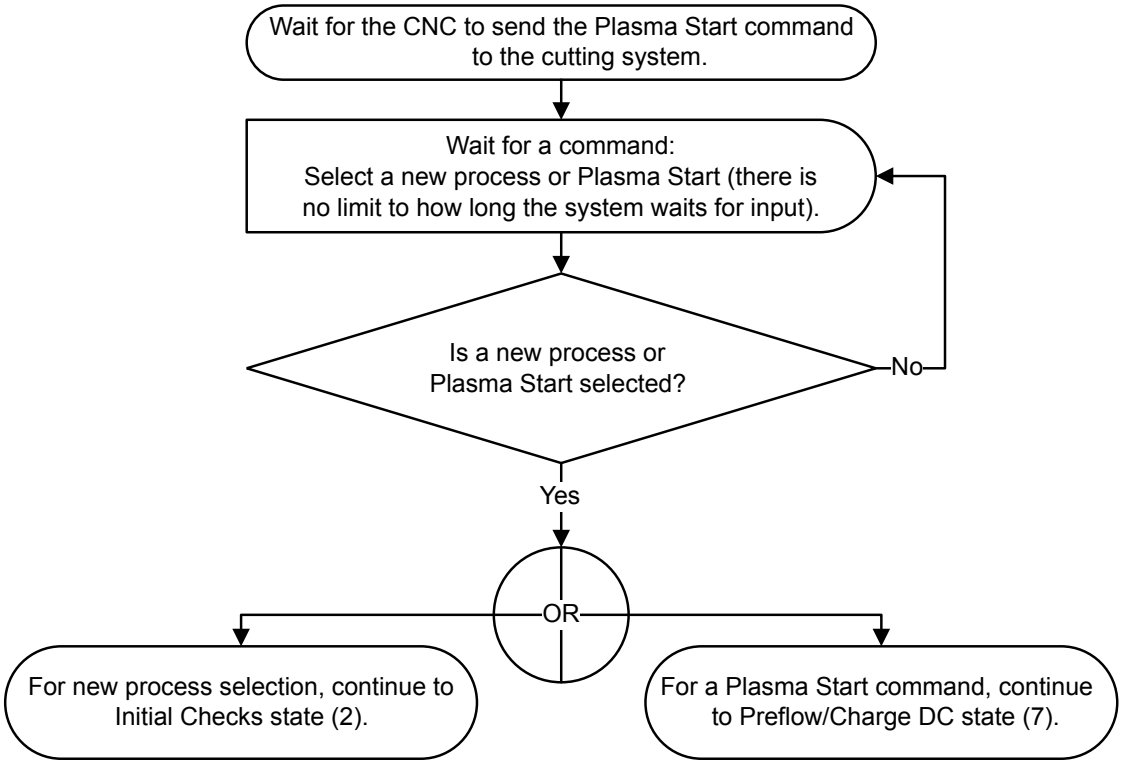


If the Wait for Start state (5) completes correctly, the process continues with:

- Initial Checks state (2) on page 218 for a new process selection
- Preflow/Charge DC state (7) on page 221 for a Plasma Start command

Refer to Initial inspection steps on page 273 for troubleshooting procedures.

## Preflow/Charge DC state (7)

During the Preflow/Charge DC state (7), the system starts some internal components and measures the gas pressure.

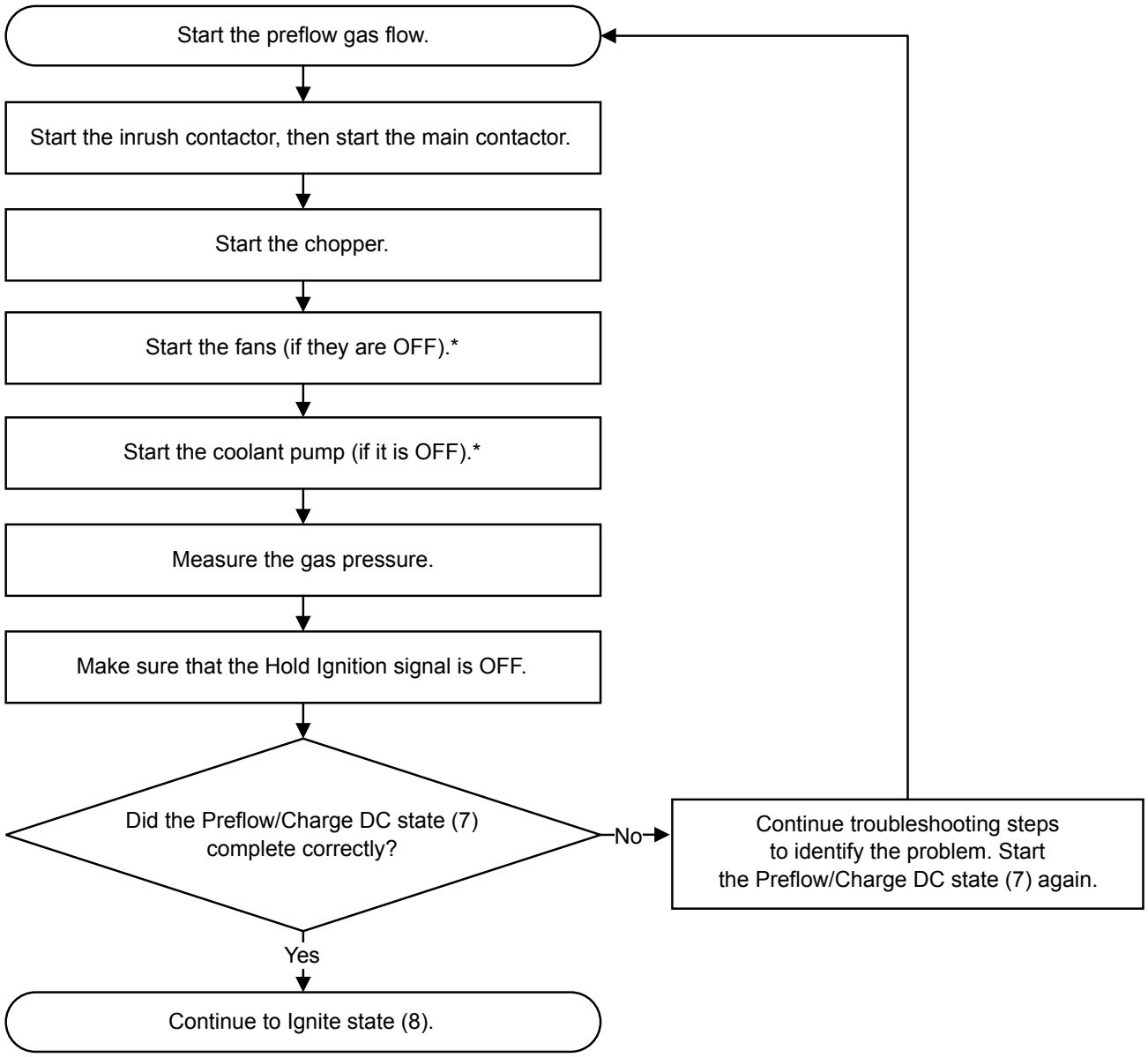


* To increase energy preservation, the coolant pump and fans stop after the time limit is expired without a command.

If the Preflow/Charge DC state (7) completes successfully, the process continues with Ignite state (8) on page 222.

Refer to Initial inspection steps on page 273 for troubleshooting procedures.

## Ignite state (8)

During the Ignite state (8), the system does a check for correct gas pressures, DC bus voltage, and chopper current. The Ignite state (8) must be completed in 500 milliseconds or less.

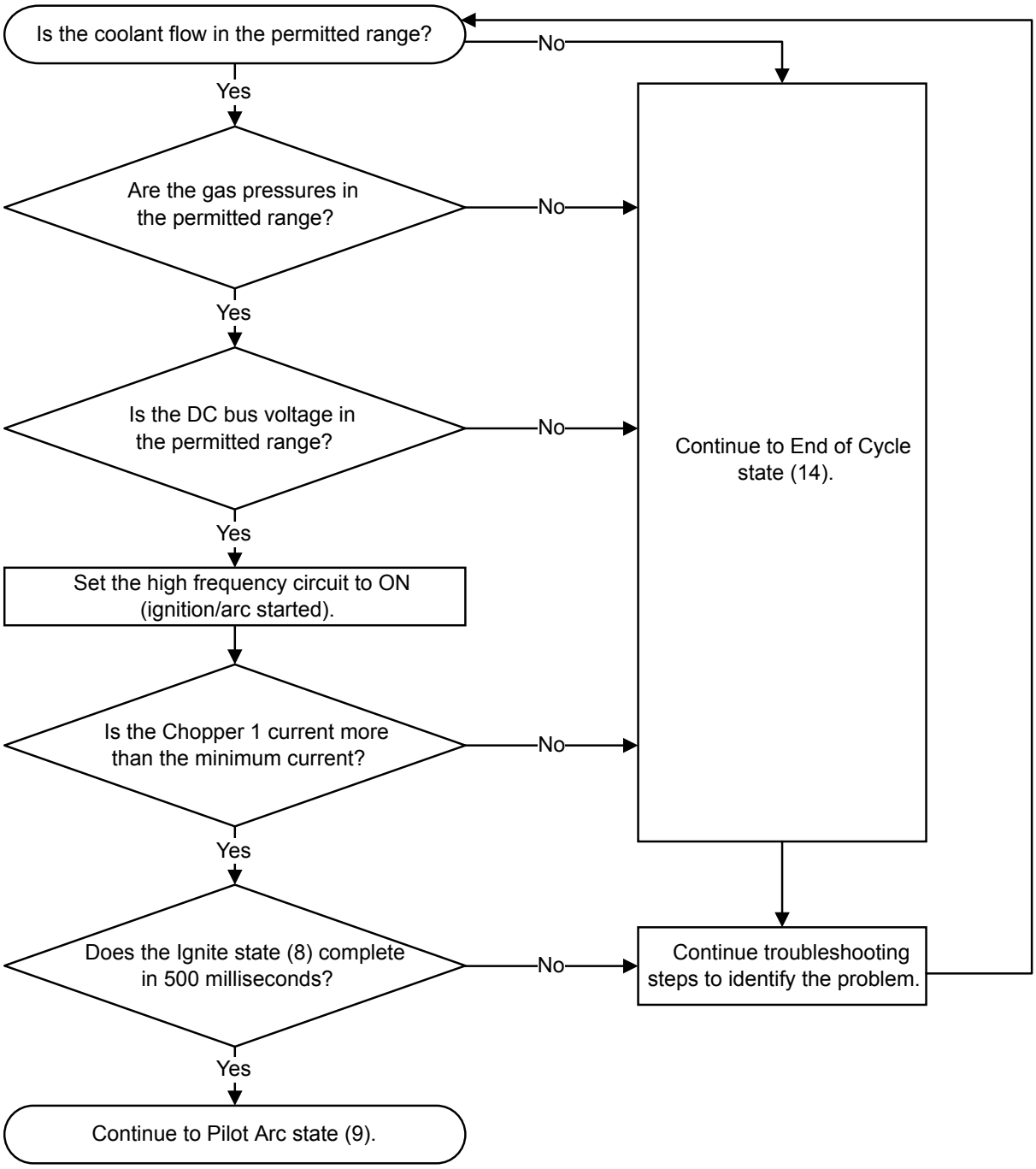


- If the Ignite state (8) completes correctly, the process continues with Pilot Arc state (9) on page 224.
- If one or more of these measurements is not correct, the process continues with End of Cycle state (14) on page 228:
  - Coolant flow
  - Gas pressure
  - DC bus voltage

- Chopper current

- If the Ignite state (8) does not complete in 500 milliseconds, continue troubleshooting steps to identify the problem.

Refer to Initial inspection steps on page 273 for troubleshooting procedures.

## Pilot Arc state (9)

During the Pilot Arc state (9), the system does a check for correct coolant flow, gas pressures, temperatures, DC bus voltage, chopper current, and work cable current. The Pilot Arc state (9) must be completed in 500 milliseconds or less.

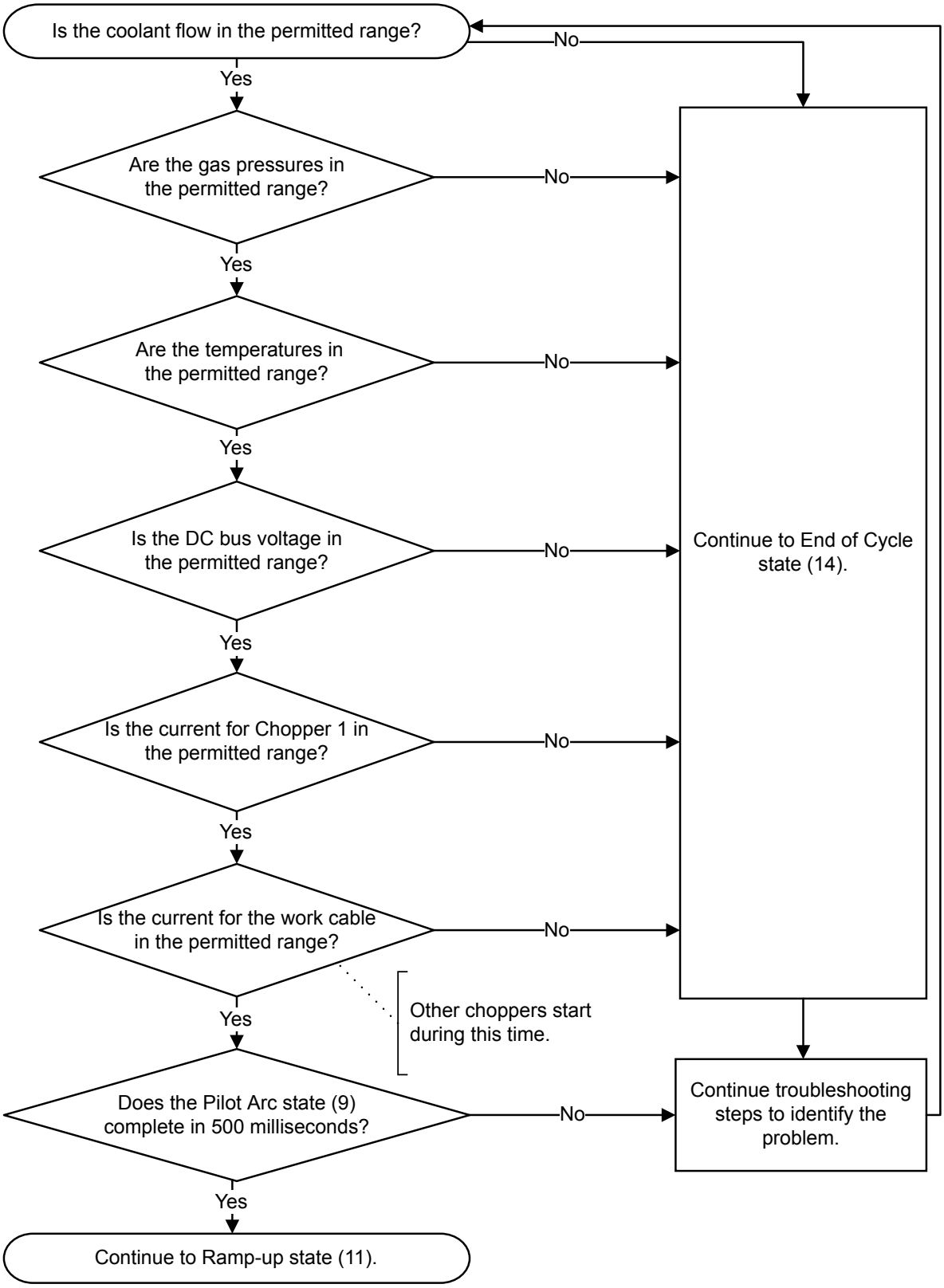


- If the Pilot Arc state (9) completes correctly, the process continues with Ramp-up state (11) on page 226.

- If one or more of these measurements is not correct, the process continues with End of Cycle state (14) on page 228:
  - Coolant flow
  - Gas pressure
  - Temperature
  - DC bus voltage
  - Chopper current
  - Work cable current
- If the Pilot Arc state (9) does not complete in 500 milliseconds, continue troubleshooting steps to identify the problem.

Refer to Initial inspection steps on page 273 for troubleshooting procedures.

## Ramp-up state (11)

During the Ramp-up state (11), the system increases current and gas flow to the correct setpoints.

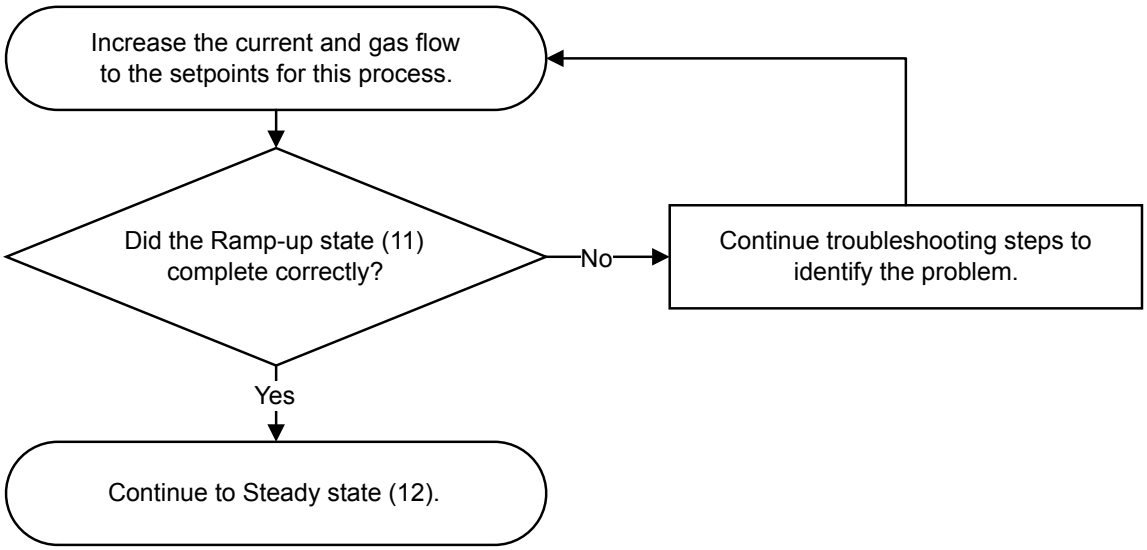


If the Ramp-up state (11) completes correctly, the process continues with Steady state (12) on page 227.

Refer to Initial inspection steps on page 273 for troubleshooting procedures.

## Steady state (12)

During the Steady state (12), the system does a check for correct coolant flow rate, gas pressures, temperatures, and chopper currents. It also does a check for the Plasma Start signal to be removed for the selected process.

The Steady state (12) uses the process that was sent by the operator (piercing, marking, or cutting).

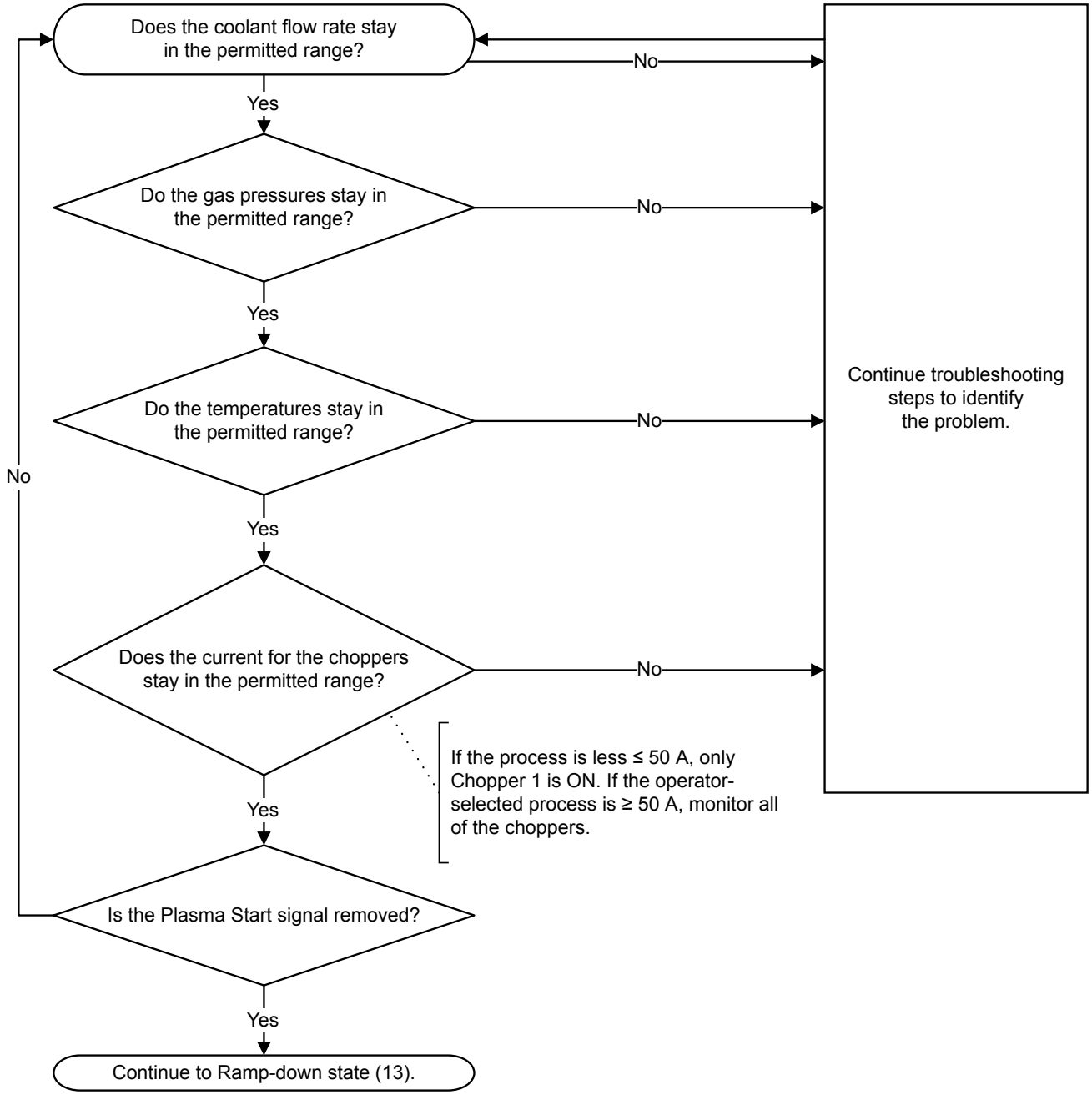

If the Steady state (12) completes correctly, the process continues with Ramp-down state (13) on page 228.

Refer to Initial inspection steps on page 273 for troubleshooting procedures.

## Ramp-down state (13)

The Ramp-down state (13) starts when the CNC removes the Plasma Start command.

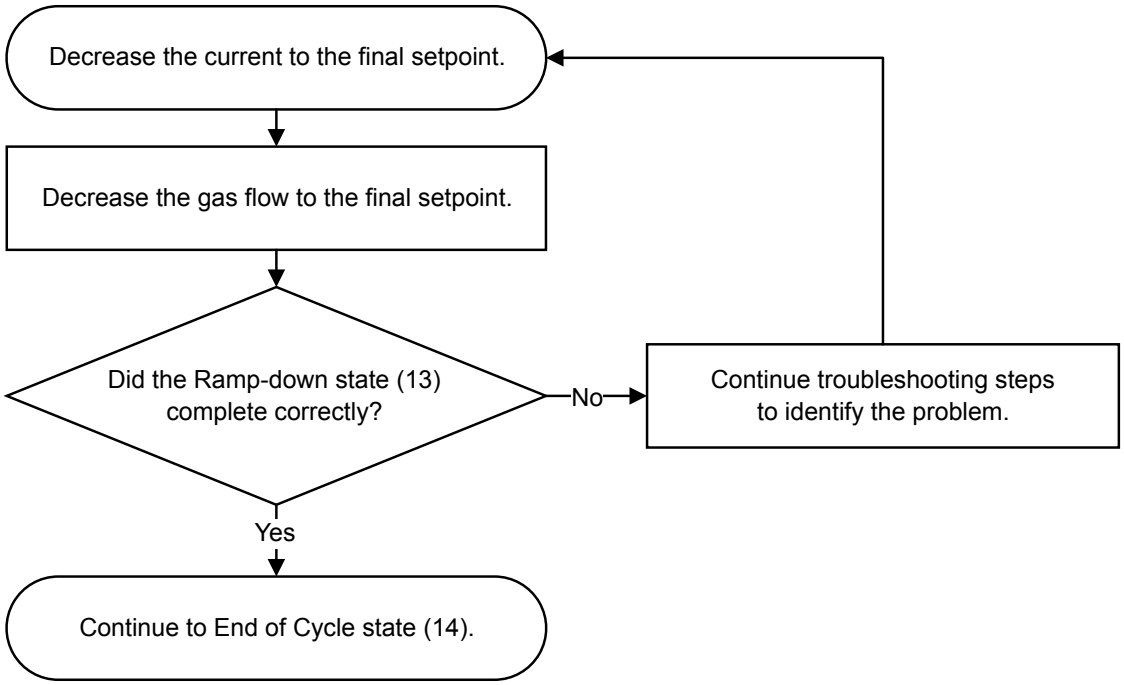


If the Ramp-down state (13) completes correctly, the process continues with End of Cycle state (14) on page 228.

Refer to Initial inspection steps on page 273 for troubleshooting procedures.

## End of Cycle state (14)

The End of Cycle state (14) stops the choppers and gas flows. It also starts timers to stop the fans and the coolant pump.

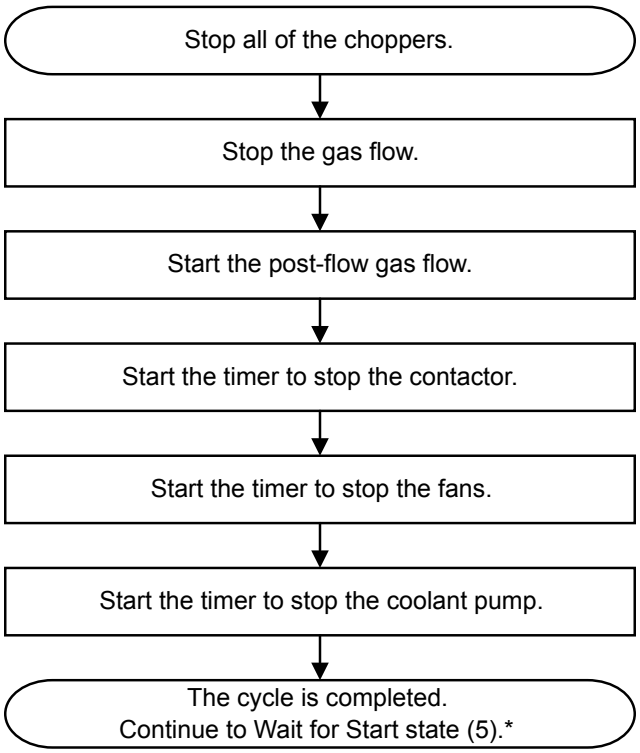


* After an operator-selected process completes correctly, the cutting system goes back to Wait for Start state (5) on page 221 to wait for the next command.

Refer to Initial inspection steps on page 273 for troubleshooting procedures.

## High-voltage relay stages in the ohmic circuit

During a wet process – for example, $N_2/H_2O$ – water can be a current path for the ohmic-sense circuit.

To prevent the flow of current to the ohmic PCB, the cutting system automatically opens the high-voltage relay and disables the ohmic-sense circuit.

Ohmic sensing for the $N_2/H_2O$ process is available. Stall force is necessary when the $N_2/H_2O$ process is used underwater.

During a dry process, the cutting system closes the high-voltage relay and enables the ohmic-sense circuit (except during high-frequency starts).

## Automatic purges

Plasma cutting system purges are automatic.

The system looks at these conditions to select the type of purge to do:

- The process that is selected now

- The process that was selected before
- The type of gas connect console:
  - OptiMix and VWI cutting systems do both gas-change purges and process-setup purges.
  - CorePlus and Core cutting systems do only process-setup purges.

The system uses these conditions to calculate the length of time that is necessary to complete a purge:

- The type of operator-selected process
- If the active process is the first process that was sent after the Power-up state

## Gas-change purges for OptiMix or VWI cutting systems

If your cutting system has an OptiMix or VWI gas connect console, a plasma-gas purge can occur automatically.

A plasma-gas purge can occur automatically when the cutting system changes from:

- A non-mixed-fuel gas process to a mixed-fuel gas ($H_2$-mix)
- A mixed-fuel gas ($H_2$-mix) or F5 to a non-mixed-fuel gas process

The type of plasma gas used for the purge is different for different cutting system configurations:

- OptiMix cutting systems use a two-phase gas-change purge that includes $N_2$.
- VWI cutting systems use a two-phase gas-change purge that includes air.

The following steps occur automatically for a plasma-gas purge:

1. The mixed-fuel gas ($H_2$-mix) or F5 drains from the plasma cutting system through the torch.
2. For an OptiMix cutting system, $N_2$ removes residual mixed-fuel gas.
3. For a VWI cutting system, air removes residual F5 gas from the torch lead.

A shield purge can be necessary in some conditions:

- If a process changes from a wet process to a dry process, a shield-fluid purge is used.
- During a shield-fluid purge, $N_2$ removes residual water from the shield gas/fluid hose.
- A wet process uses water as a shield fluid. A dry process does not use water as a shield fluid.

Core and CorePlus cutting systems use only process-setup purges. They do not use gas-change purges.

## Process-setup purges for all plasma cutting systems

Process-setup purges are different for an OptiMix or VWI gas connect console than they are for a CorePlus or Core gas connect console.

If your cutting system has an OptiMix or VWI gas connect console, a process-setup purge automatically follows the gas-change purge and includes preflow and cutflow purges.

If you have a CorePlus or Core gas connect console, only the process-setup purge occurs. There is no gas-change purge.

The type of process gas that is selected for a process-setup purge aligns with the operator-selected process.

# Process selection

All of the cutting processes have a process ID that is a unique identification number. Each process ID aligns with a set of preprogrammed values in the cut chart database in the plasma power supply control PCB.

Processes in the database can be selected by these categories:

- Metal type and thickness
- Cutting current
- Plasma and shield gas types
- Process category

When you select a process ID from the CNC or from the **Operate** screen in the XPR web interface, the cutting system automatically starts the preprogrammed settings for that process using the values in the database.

Controls on the screen let you select, monitor, and control processes directly from the CNC or from the **Operate** screen in the XPR web interface.

Manual selection of settings is not necessary in most conditions. However, you can adjust some preprogrammed settings with override or offset commands, within limits. Refer to Process ID offsets / overrides on page 232.

## Use process IDs for optimal settings

To automatically get recommended settings, select the process ID for the process that aligns with your cutting application.

When you select a process ID from the CNC or from the XPR web interface, you automatically get the optimized settings that Hypertherm recommends for that process.

The preprogrammed settings come from extensive Hypertherm laboratory tests. Because of differences in cutting systems, metals, and consumables, it can be necessary to adjust the settings. However, in most

conditions, it is possible to get the best results when you use the default settings that come with a process ID.

1. Go to the process selection screen on the CNC or to the **Operate** screen on the XPR web interface.
2. Select the process ID:
   a. Examine the list of available processes.
   b. Identify the process that best aligns with your cutting application.

      For example, select process ID 1153 to start the settings for 170 A, 12 mm (0.5 inch), mild steel, $O_2$/Air.

      Process selection must occur during the Initial Checks state.
3. If none of the processes are satisfactory:
   a. Select an available process that is almost the same.
   b. Send the necessary offset command or commands to adjust the setting or settings as necessary.

What to do next: If an unusual cutting process is necessary, speak to your cutting machine supplier or regional Hypertherm Technical Service team.

### Process ID offsets / overrides

You can adjust some preprogrammed settings with an offset or override command.

An offset/override command is a type of serial RS-422, EtherCAT, or wireless (XPR web interface through Wi-Fi) signal that lets you change the default value of a setting within a permitted limit.

For example, if a preprogrammed plasma pressure value is 65, and you want to change it to 70, send an offset command of 5 (65 + 5 = 70). You can also use the XPR web interface to send the plasma pressure value that you want (70).

Offset settings stay on until you send a new process ID to the cutting system or until power is removed from the cutting system.

For descriptions of offset commands and the permitted limits for each adjustable setting, refer to the *CNC Communication Protocol for the XPR Cutting System (809810).*

## Cut charts

A cut chart contains parameters that are necessary to get optimal results for your cutting process with special materials and thicknesses.

Electronic cut charts are available on the cut chart screen of the CNC or the XPR web interface. For information about how to find electronic cut charts, refer to the instruction manual that came with your CNC. Always use these electronic cut charts for full and accurate process-selection information.

Cut charts are also available in the *XPR Cut Charts Instruction Manual (809830)*.

If the default process ID settings are not satisfactory for your application, use the cut charts to help with process selection.

The results that you want from a process can help you to select the correct process. In some conditions, cut quality is important. In other conditions, speed is important. Frequently, the best choice balances speed and quality. The preprogrammed settings that come with a process ID balance quality and speed with using moderately used consumables.

## Process core thickness (PCT)

The cut chart for each cutting process contains a range of possible thicknesses.

Process engineers have supplied cut parameters for an optimal range of thicknesses (process category 1 for XPR). This optimal range is known as the Process Core Thickness (PCT). Thicknesses that are more than and less than the PCT can have different results for cut quality, cut speed, and piercing.

## Process categories

The cut charts have five process categories. Each category has a unique process category number (1 – 5) that identifies the performance that is possible when you select that process.

The category number for the process that you select changes how the cut quality and the cut speed are balanced. For best results, Hypertherm recommends that you select process category number 1 when possible. Category 1 supplies an optimal thickness (or PCT) for that cut process that balances cut quality and cut speed.

These tables identify the possible results with different process category numbers.

**Table 28 -** Process options and possible results for mild steel

| Process category number | Process category condition | Category description | Quality | Speed |
|---|---|---|---|---|
| **Category 1** | PCT | ▪ The process best balances cut speed and cut quality.<br>▪ The process is optimal for this thickness.<br>▪ The cuts frequently have no dross. | Very good | Very good |
| **Category 2** | Thicker than PCT | ▪ The process is a good selection when edge quality is more important than speed.<br>▪ Some low-speed dross is possible. | Very good to excellent | Lower |
| **Category 3** | Thinner than PCT | ▪ The process is a good selection when speed is more important than edge quality.<br>▪ The cuts frequently have no dross. | Lower | Higher |
| **Category 4** | Edge start for most processes | ▪ An edge start is necessary, but not for argon-assist processes.<br>▪ Thick, low-speed dross is possible. | Good | Low |
| **Category 5** | Severance | ▪ This is the maximum thickness for these processes.<br>▪ An edge start is necessary.<br>▪ Cut speeds can be very slow.<br>▪ Cut-edge quality can be rough.<br>▪ It is possible to get a lot of dross.<br>▪ Thick-metal cutting techniques can be necessary.<br>▪ There is a risk that the voltages that are necessary for severance cutting can prevent the system from operating at 100% duty cycle with extended cutting intervals. | Very low | Very low |

In general, Hypertherm recommends lower amperage processes for the best cut-edge quality and higher amperage processes for the best dross-free cutting. When speed is more important than quality, use a higher amperage process. For information about process selection, refer to the *XPR Cut Charts Instruction Manual (809830)*.

**Table 29 -** Process options and possible results for non-ferrous materials

| Process category number | Process category condition | Category description | Quality | Speed |
|---|---|---|---|---|
| **Category 1** | PCT | ▪ When possible, select Category 1 for optimal edge quality and speed, with minimum dross.<br>▪ The process is optimal for this thickness.<br>▪ The cuts frequently have no dross. | Very good to excellent | Very good |
| **Category 2** | Thicker than PCT | ▪ In most conditions, it is possible to get square cut edges with sharp top edges.<br>▪ A darker edge color is possible with stainless steel.<br>▪ Some dross is possible. | Good to very good | Lower |
| **Category 3** | Thinner than PCT | ▪ Select Category 3 when speed is more important than edge quality.<br>▪ Some dross is possible. | Lower | Higher |
| **Category 4** | Edge start only | ▪ An edge start is necessary.<br>▪ A darker edge color is possible with stainless steel.<br>▪ Thick dross is possible. | Good | Low |
| **Category 5** | Severance | ▪ This is the maximum thickness for these processes.<br>▪ An edge start is necessary.<br>▪ Cut speeds can be very slow.<br>▪ Cut-edge quality can be rough.<br>▪ It is possible to get a lot of dross.<br>▪ Thick-metal cutting techniques can be necessary.<br>▪ There is a risk that the voltages that are necessary for severance cutting can prevent the system from operating at 100% duty cycle with extended cutting intervals. | Very low | Very low |

In general, Hypertherm recommends dross-free processes. Non-ferrous dross is not easy to remove. The plasma cutting system supplies these non-ferrous cutting processes, but the processes that are available are different for different gas connect consoles: Air/Air, $N_2/N_2$, $N_2/H_2O$, F5/

$N_2$ and mixed-fuel gas/$N_2$. For information about process selection, refer to the *XPR Cut Charts Instruction Manual (809830)*.

# Torch consumables

The plasma cutting system uses the same consumable parts for perpendicular-position processes (90° angle) and bevel-cutting processes.

It is not necessary to change consumables when you go from a perpendicular-position process to bevel cutting or from bevel cutting to a perpendicular-position process. It also is not necessary to keep two different sets of consumables (perpendicular and bevel).

For information about how to select consumables (including part numbers) by process type and metal and how to install the consumables, refer to these sources:

- *XPR Cut Charts Instruction Manual (809830)*
- Install the consumables on page 149

# Example configurations for consumables

Consumables that are worn or have damage can have a bad effect on cut quality.

At a minimum, examine the installed consumables one time each day **before** system operation. For information about how to do this, refer to Examine the consumable parts on page 254.

## Ferrous (mild steel) example configurations

Use these sets of consumables to cut ferrous material. Mild steel is an example of a ferrous metal.

### Mild steel – 30 A – $O_2/O_2$

**Figure 58 -** Mild steel 30 A consumables

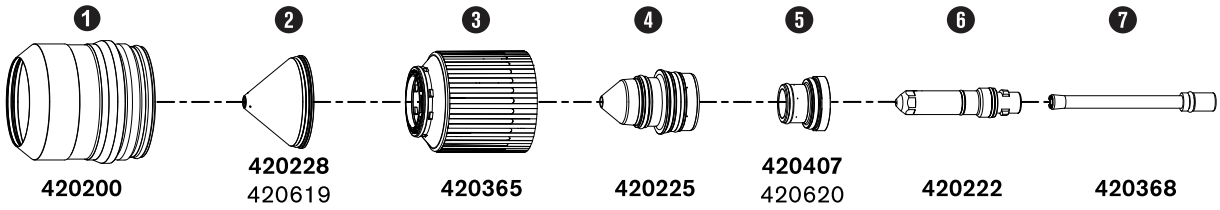


**1** Shield retaining cap

**2** Shield [1]

**Figure 58 -** Mild steel 30 A consumables (continued)

**3** Nozzle retaining cap

**4** Nozzle

**5** Swirl ring [1]

**6** Electrode

**7** Water tube

1 The bottom part number is for mirror cutting only.

## Mild steel – 50 A, 80 A, 130 A, 170 A, 220 A, 300 A, and 460 A – $O_2$/Air

**Figure 59 -** Mild steel consumables 50 A – 460 A

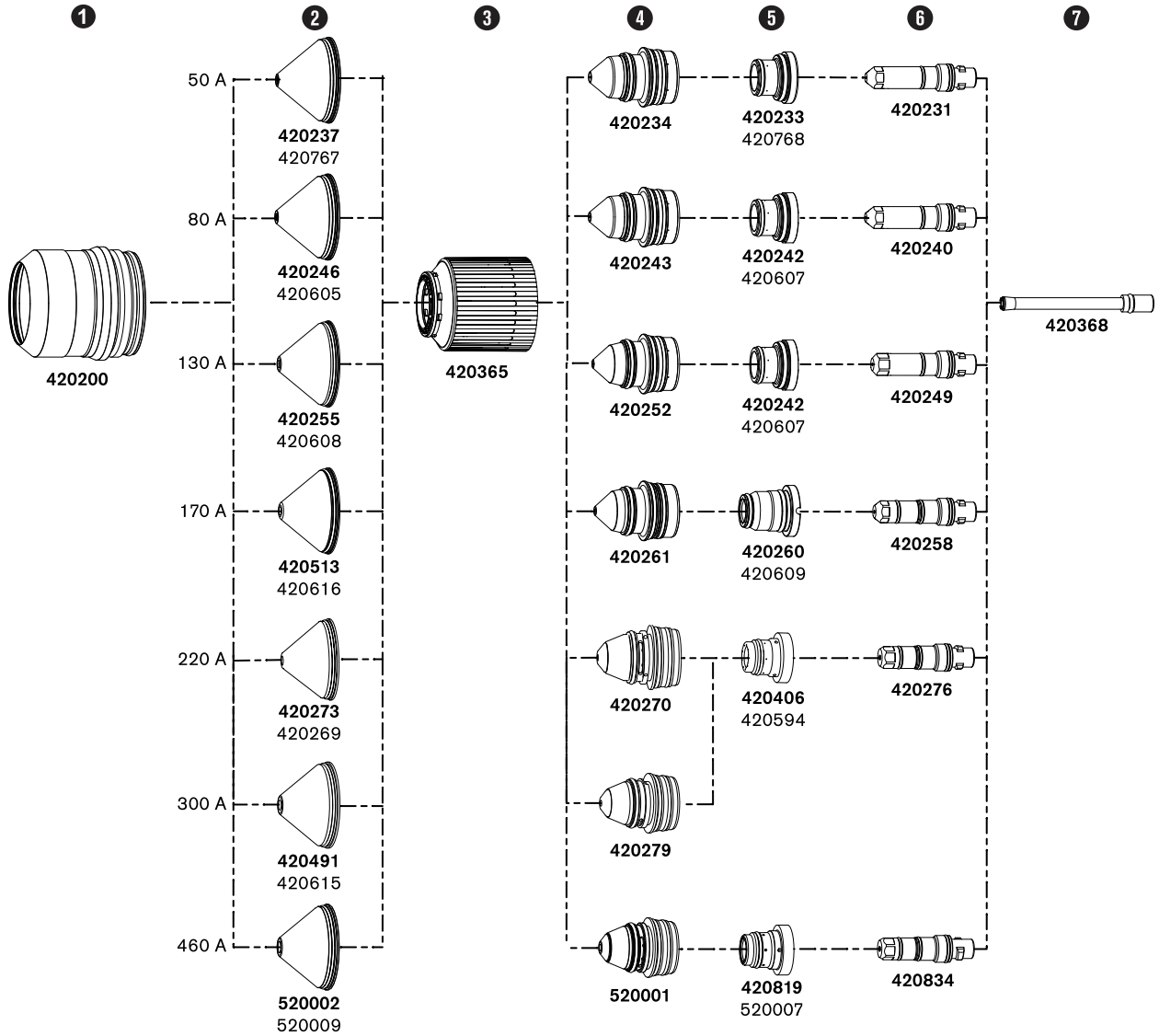

**Figure 59 -** Mild steel consumables 50 A – 460 A (continued)

**1** Shield retaining cap

**2** Shield [1]

**3** Nozzle retaining cap

**4** Nozzle

**5** Swirl ring [1]

**6** Electrode

**7** Water tube

1 The bottom part number is for mirror cutting only.

# Non-ferrous (stainless steel and aluminum) example configurations

Use these sets of consumables to cut non-ferrous material. Stainless steel and aluminum are examples of non-ferrous metals.

## Non-ferrous – 40 A – $N_2/N_2$ and Air/Air

**Figure 60 -** Non-ferrous 40 A consumables

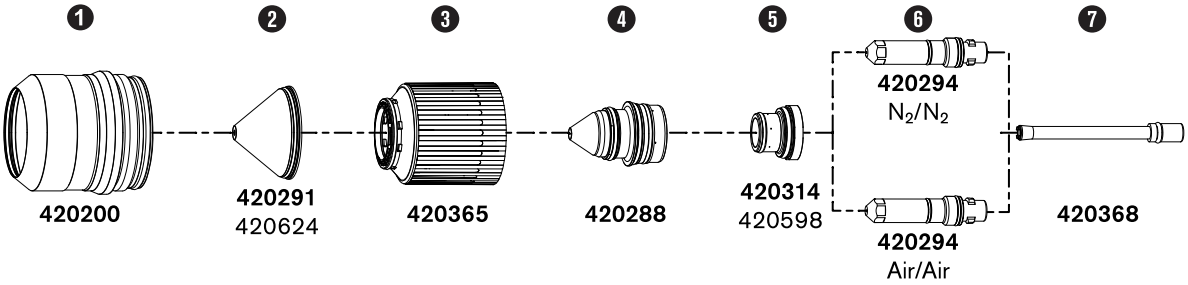


**1** Shield retaining cap

**2** Shield [1]

**3** Nozzle retaining cap

**4** Nozzle

**5** Swirl ring [1]

**6** Electrode

**7** Water tube

1 The bottom part number is for mirror cutting only.

## Non-ferrous – 60 A – F5/$N_2$, $N_2$/$N_2$, $N_2$/$H_2O$, and Air/Air

F5/$N_2$ and $N_2$/$H_2O$ can be used only with VWI and OptiMix gas connect consoles.

**Figure 61 -** Non-ferrous 60 A consumables

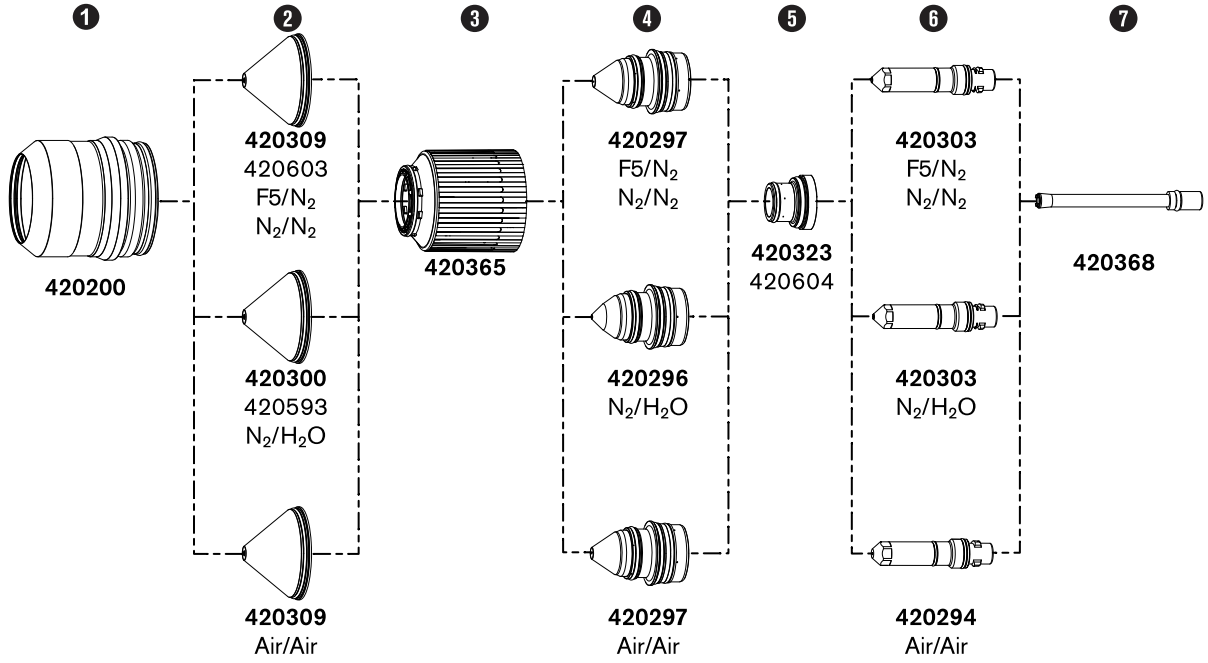


**1** Shield retaining cap

**2** Shield [1]

**3** Nozzle retaining cap

**4** Nozzle

**5** Swirl ring [1]

**6** Electrode

**7** Water tube

1 The bottom part number is for mirror cutting only.

## Non-ferrous – 80 A – F5/$N_2$, $N_2$/$N_2$, $N_2$/$H_2O$, Air/Air

F5/$N_2$ and $N_2$/$H_2O$ can be used only with VWI and OptiMix gas connect consoles.

**Figure 62 -** Non-ferrous 80 A consumables

**Figure 62 -** Non-ferrous 80 A consumables (continued)

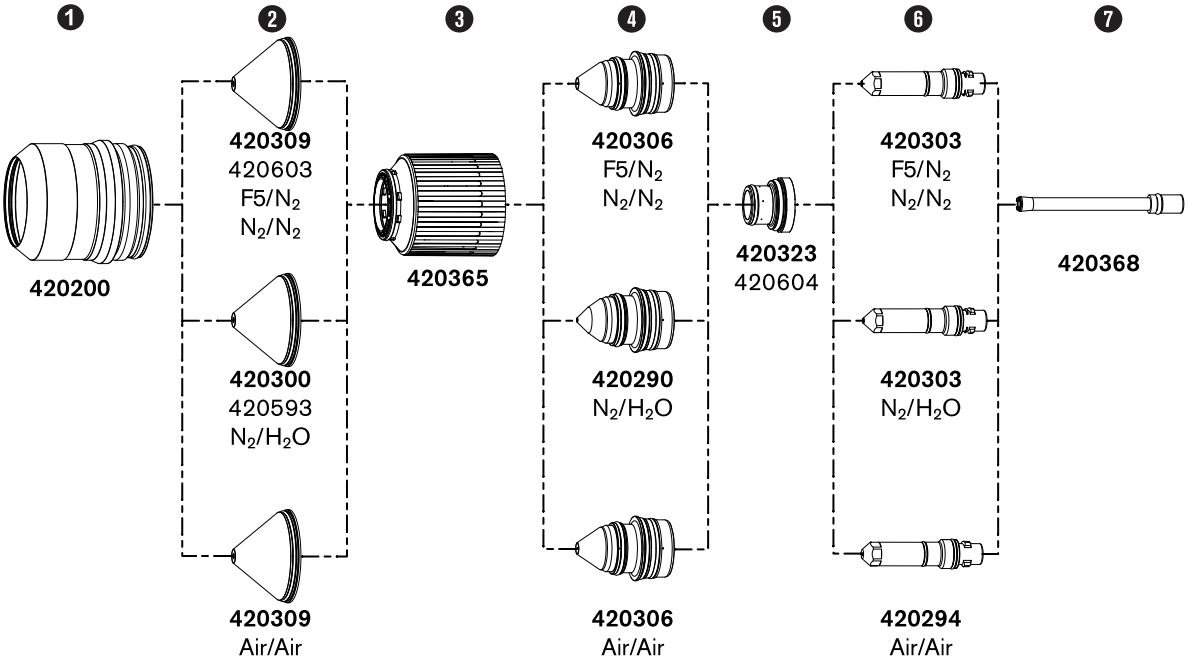


**1** Shield retaining cap

**2** Shield [1]

**3** Nozzle retaining cap

**4** Nozzle

**5** Swirl ring [1]

**6** Electrode

**7** Water tube

1 The bottom part number is for mirror cutting only.

## Non-ferrous – 130 A – $N_2/N_2$, Mix/$N_2$, $N_2/H_2O$

F5/$N_2$ and $N_2/H_2O$ can be used only with VWI and OptiMix gas connect consoles. Mix/$N_2$ can be used only with OptiMix gas connect consoles.

**Figure 63 -** Non-ferrous 130 A consumables

**Figure 63 -** Non-ferrous 130 A consumables (continued)

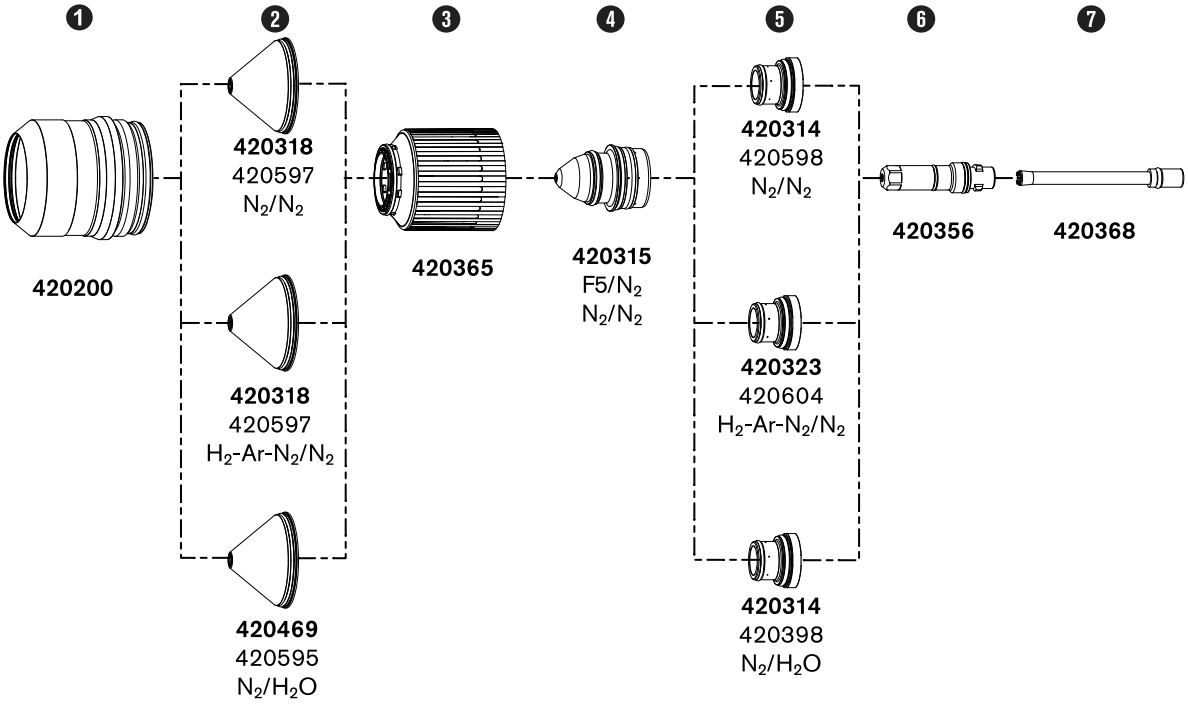


**1** Shield retaining cap

**2** Shield [1]

**3** Nozzle retaining cap

**4** Nozzle

**5** Swirl ring [1]

**6** Electrode

**7** Water tube

1 The bottom part number is for mirror cutting only.

## Non-ferrous – 170 A – $N_2/N_2$, Mix/$N_2$, $N_2/H_2O$, Air/Air

$N_2/H_2O$ can be used only with VWI and OptiMix gas connect consoles. Mix/$N_2$ can be used only with OptiMix gas connect consoles.

**Figure 64 -** Non-ferrous 170 A consumables

**Figure 64 -** Non-ferrous 170 A consumables (continued)

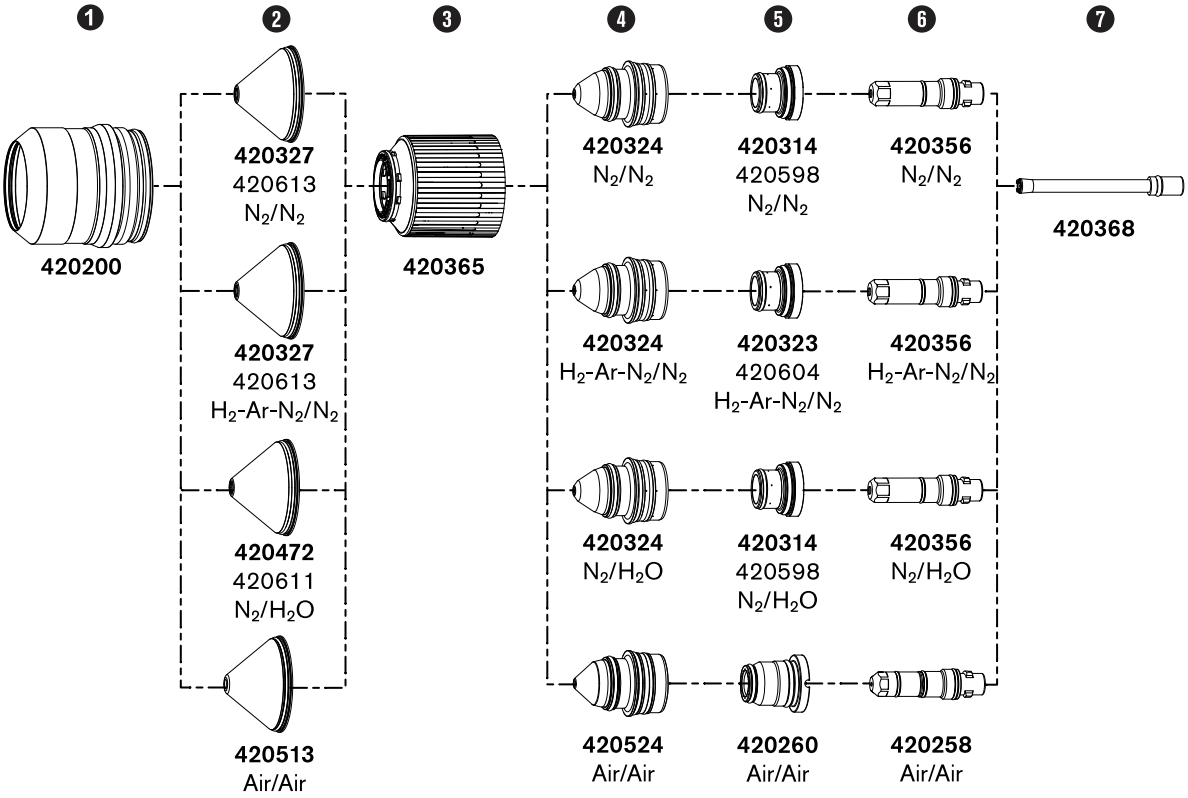


**1** Shield retaining cap

**2** Shield [1]

**3** Nozzle retaining cap

**4** Nozzle

**5** Swirl ring [1]

**6** Electrode

**7** Water tube

1 The bottom part number is for mirror cutting only.

## Non-ferrous – 300 A – $N_2/N_2$, Mix/$N_2$, $N_2/H_2O$

$N_2/H_2O$ can be used only with VWI and OptiMix consoles. Mix/$N_2$ can be used with OptiMix consoles.

**Figure 65 -** Non-ferrous 300 A consumables

**Figure 65 -** Non-ferrous 300 A consumables (continued)

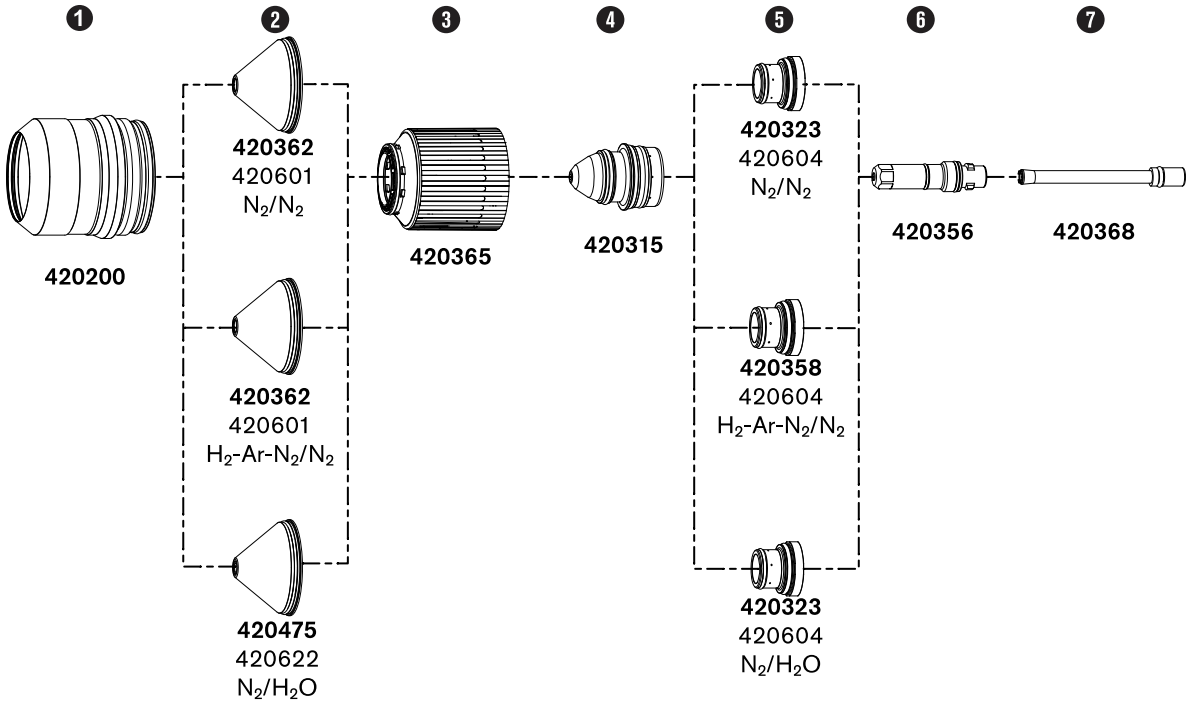


**1** Shield retaining cap

**2** Shield [1]

**3** Nozzle retaining cap

**4** Nozzle

**5** Swirl ring [1]

**6** Electrode

**7** Water tube

1 The bottom part number is for mirror cutting only.

# Recommendations for maximum consumable life

Consumables are the parts of the torch that wear as they are used. Consumables that are near end-of-life can have a bad effect on cut quality and performance.

- LongLife® process settings can keep erosion on the emitter surface of the electrodes to a minimum. These steps occur automatically with LongLife electrode protection:
  - An automatic ramp up of the gas and current flow at the start of a cut
  - An automatic ramp down of the gas and current flow at the end of a cut

- To get the full benefits of the Hypertherm LongLife and Arc Response Technology™, do not fire the torch into the air.

  It is permitted to start a cut at the edge of the workpiece. However, when possible, start and stop cuts on the surface of the workpiece.

- Use the pierce settings in the cut chart database.
- When possible, do not cut metal that is magnetic or that can easily become magnetic. For example, do not cut armor plate that has a high nickel content.
- To get the full benefits of the Hypertherm automatic ramp-down error protection, select processes that have cut speeds of 3,560 mm/min (140 in/min) or less. Refer to Automatic ramp-down error protection on page 245.
- To keep the risk of catastrophic failure of a consumable part to a minimum when cut speeds are more than 3,560 mm/min (140 in/min), always do these steps when cutting:
  - Decrease the cut speed when the end of the cut is near.
  - Program torch movement into the scrap area of the workpiece.

  When possible, use a chain cut so that the path of torch movement goes directly from one cut part to the next. This type of cut decreases the quantity of plasma arc starts and stops for multipart cutting, which can cause damage to electrodes.

# Arc Response Technology

Arc Response Technology lets the plasma cutting system adapt to problems at the torch that can cause decreased consumable life or possible torch damage.

One or more choppers in the plasma power supply monitor the current and arc voltage load in intervals of 33 microseconds (30 kHz). This scan helps the system to almost immediately find and adapt to possible problems at the torch during cutting.

## Automatic torch protection

When consumables have a catastrophic failure (or blow out) at high current settings, torch damage can occur. This torch damage can occur from the plasma arc or from molten copper or brass that gets into the coolant paths of the torch.

If catastrophic consumable failure occurs, the chopper or choppers in the plasma power supply can find the problem at its start through the EMI or noise signature of the current that is being supplied to the torch. The chopper adapts quickly to stop the cutting system and to prevent damage to the torch.

The electrode will have a catastrophic failure (a blow out), and there can be possible damage to other consumables, but catastrophic damage to the torch will not occur.

## Automatic ramp-down error protection

For LongLife technology, a controlled stop of the current and gas pressure is necessary for protection of electrode life for mild steel cut processes. A failure to complete the cut on the workpiece causes most uncontrolled stops (ramp-down errors).

Failure to complete the cut on the workpiece causes the plasma arc to extend too far and then to snap out (break) in a ramp-down error, which can quickly decrease consumable life. These are common causes for a ramp-down error:

- Incorrect hole lead outs
- Cutting off the edge of the workpiece

The cutting system can sense a ramp-down error before the arc snaps out (breaks) and can adjust quickly to do a controlled stop of the current and gas pressure. This type of controlled stop can help very much to increase electrode life, especially when cut speeds are less than 3,560 mm/min (140 in/min).

# 7 Maintenance

## Plasma system maintenance

Hypertherm cutting systems can operate in harsh conditions for many years. To maintain cutting system performance, minimize operating costs, and lengthen cutting system life, it is important to follow all maintenance procedures and schedules.

If you have questions about how to maintain your cutting system, contact your cutting machine supplier or regional Hypertherm Technical Service team. You can find contact information for your regional office at www.hypertherm.com on the "Contact us" page.

This section of the manual describes maintenance steps that you **must do daily, before system operation.**

- For instructions about preventive maintenance (such as weekly, monthly, and yearly tasks) refer to the *XPR Preventative Maintenance Program (PMP) Instruction Manual (809490)*.
- For recommendations about how to diagnose and troubleshoot performance issues, refer to *Diagnostics and Troubleshooting*.
- For PCB drawings and LED locations, refer to Plasma power supply power distribution PCB (141577) diagram on page 381.

Refer to this table for a list of preventive maintenance steps. The *XPR Preventative Maintenance Program (PMP) Instruction Manual (809490)* explains how to do them.

Usually, operators can do the daily, weekly, and bi-monthly tasks, but qualified maintenance personnel are needed for monthly, every-6-month, and yearly tasks.

**Table 30 -** Inspection, preventive maintenance, and cleaning tasks

| Maintenance task or activity | Daily | Weekly | Monthly | Every 6 months |
|---|---|---|---|---|
| Do a test of the inlet pressures | X | | | |
| Examine all of the air filters | X | | | |
| Do a check of the coolant level and condition | X | | | |
| Examine and lubricate O-rings | X | | | |
| Examine the water tube and torch | X | | | |
| Examine hoses, cables, and leads | | X | | |
| Do tests for gas leaks | | X | | |
| Do a check of the coolant flow | | X | | |
| Clean inside the plasma power supply | | | X | |
| Examine the contactors | | | X | |
| Examine the pilot-arc relay | | | X | |
| Examine the coolant system | | | X | |
| Do the coolant flow test | | | X | |
| Examine the gas line connections | | | X | |
| Examine the hoses | | | X | |
| Examine the cables | | | X | |
| Examine the ground connections | | | X | |
| Examine the table-to-workpiece connection | | | X | |
| Replace the coolant and coolant filter, and clean and examine the pump screen and coolant check valve | | | | X |

# Daily inspections

Always do these tasks at least once daily, **before** system operation.

- Examine the gas regulators on page 250
- Examine the shield water regulator (if applicable) on page 250
- Examine the connections and fittings on page 251
- Remove the torch and consumable parts on page 143
- Examine the torch lead on page 259

## Remove the power from the cutting system

Many maintenance procedures require you to remove the power from the cutting system. To do this safely, use this procedure.

**WARNING**

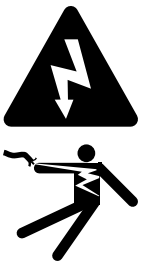

**ELECTRIC SHOCK CAN KILL**

If the line-disconnect switch is not in the OFF position you can get a serious electric shock. Electric shock can seriously injure or kill you.

The line-disconnect switch must be in the OFF position before you connect the power cord to the cutting system. It must REMAIN in the OFF position until all installation steps are complete. In the United States, use a "lock out/tag out" procedure until installation is complete. In other countries, follow the appropriate national and local safety procedures. Refer to the *Safety and Compliance Manual (80669C)* for more safety information.

**WARNING**

**ELECTRIC SHOCK CAN KILL**

The plasma power supply contains dangerous electric voltages that can seriously injure or kill you. Even if the plasma power supply is turned OFF, you can still get a serious electric shock if the plasma power supply remains connected to an electric power source.

Use extreme caution if you do diagnosis or maintenance tasks when the plasma power supply remains connected to an electric power source and the outer cover or panels are removed.

**WARNING**

**MACHINE MOTION CAN CAUSE INJURY**

The end-use customer and the cutting machine supplier are responsible for providing protection against the hazardous moving parts of this cutting system. Read and follow the instruction manual provided by the cutting machine supplier. Refer to the *Safety and Compliance Manual (80669C)* for more safety information.

Before you begin: Before you remove the power from the cutting system, it can be helpful to move the torch to the edge of the cutting table and raise the torch lifter to its highest point. This provides easier access to the torch and consumable parts.

1. Set the line-disconnect switch to the OFF position.
2. If the cutting system is not hard wired, disconnect the main power from the electric power.

   If the cutting system is hard wired, you cannot disconnect the main power from the electric power.

   Even if you remove the power from the cutting system, you can still get a serious electric shock if the plasma power supply remains connected to an electric power source. Use extreme care during service and maintenance when the cutting system is connected to electricity.
3. Make sure that the power-indicator LED is not illuminated on the plasma power supply, gas connect console, or torch connect console.

## Examine the gas regulators

Before you start cutting system operation, examine the regulator (or regulators) for the supply gases.

1. Examine the regulator (or regulators) for the supply gases before you start the cutting operation.
2. Be sure the supply gas pressures and flow rates are within the recommended range.

   Refer to Process-gas requirements for all gas connect consoles on page 48.
3. Adjust the regulator (or regulators) accordingly.

## Examine the shield water regulator (if applicable)

If your cutting system uses water as a shield fluid, examine the shield water settings before you start cutting system operation.

1. Make sure that the water pressure and flow rate is within the recommended range.

Refer to Table 12 on page 55.

2. Adjust that regulator on the water supply, if necessary.

The regulator on the gas connect console cannot be adjusted.

## Examine the connections and fittings

Inspect all hoses, cables, and leads for any damage or wear, check the fittings that connect these components, and replace any damaged parts. Components should not twist or kink during operation.

1. Remove the power from the cutting system.
2. Examine all of the hoses, cables, and leads that connect system components.

   Look for:

   - ☐ Kinks
   - ☐ Cracks
   - ☐ Cuts
   - ☐ Frays
   - ☐ Bulges or bubbles

3. Replace any hose, cable, or lead if you find damage or excessive wear.
4. Examine all of the fittings that connect the hoses, cables, and leads:

   a. Tighten loose connections if found, but do not make the connections too tight.

   Refer to the following table:

**Table 31 -** Torque specifications

| | Gas or water hose dimensions | N·m | lbf·in | lbf·ft |
|---|---|---|---|---|
| | 10 mm (3/8 inch) or less | 8.5 – 9.5 | 75 – 84 | 6.25 – 7 |
| | 12 mm (1/2 inch) | 16.3 – 19.0 | 144 – 168 | 12 – 14 |
| | 25 mm (1 inch) | 54.2 – 88.1 | 480 – 780 | 40 – 65 |

   b. Order a replacement hose, cable, or lead set if you find its fitting has damage or excess wear.

   Replacement sets are available from Hypertherm.

   Individual fittings for external hoses, cables, and leads are not replaceable. If you find a problem with an external fitting, you must order a replacement hose, cable, or lead set (with integrated fitting).

Some hose fittings inside of the plasma power supply are replaceable. For part numbers and specifications, refer to the Plasma power supply parts on page 393.

5. Make sure that the hoses, cables, and leads do not twist or kink during torch movement and system operation.

   Adjust them if needed.

6. Before you supply power to the cutting system, always complete all inspection and maintenance tasks.

## Remove the torch and consumable parts

It can be necessary to remove the torch and consumable parts for replacement, maintenance, or troubleshooting.

**WARNING**

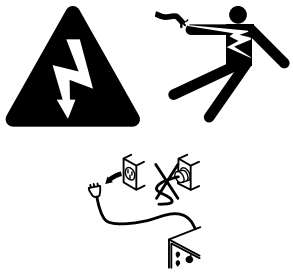

**ELECTRIC SHOCK CAN KILL**

Disconnect electric power before doing installation or maintenance. The line-disconnect switch must STAY in the OFF position until all of the installation or maintenance steps are complete. Refer to the *Safety and Compliance Manual (80669C)* for more safety information.

***NOTICE***

**A LOOSE OR OVERTIGHTENED ELECTRODE CAN CAUSE DAMAGE TO THE TORCH**

If you do not correctly install and tighten the electrode, torch damage can occur.

A tool is necessary to correctly install and tighten the torch electrode. Do not use your hands. Hypertherm recommends tightening the electrode to a torque value of 2.3 N·m – 2.8 N·m (20 lbf·in – 25 lbf·in).

- The torch head in the XPR torch-assembly kit has 460 A mild steel consumable parts installed on it. Refer to Consumable starter kits on page 420 if necessary.

- For information about how to select consumables for your cutting or marking applications, refer to the *XPR Cut Charts Instruction Manual (809830)*.

1. Remove the power from the cutting system:
   a. Set the line-disconnect switch to the OFF position.
   b. Make sure that the power-indicator LED is **not** illuminated on the plasma power supply or other system components.
2. Loosen the torch coupler nut to release the torch from the torch receptacle.

   The torch and consumables can be hot. Put on gloves to prevent burns.
3. Put the torch and torch receptacle on a surface that is:
   - ☐ Clean
   - ☐ Dry
   - ☐ Oil-free
4. Remove the consumables as shown.

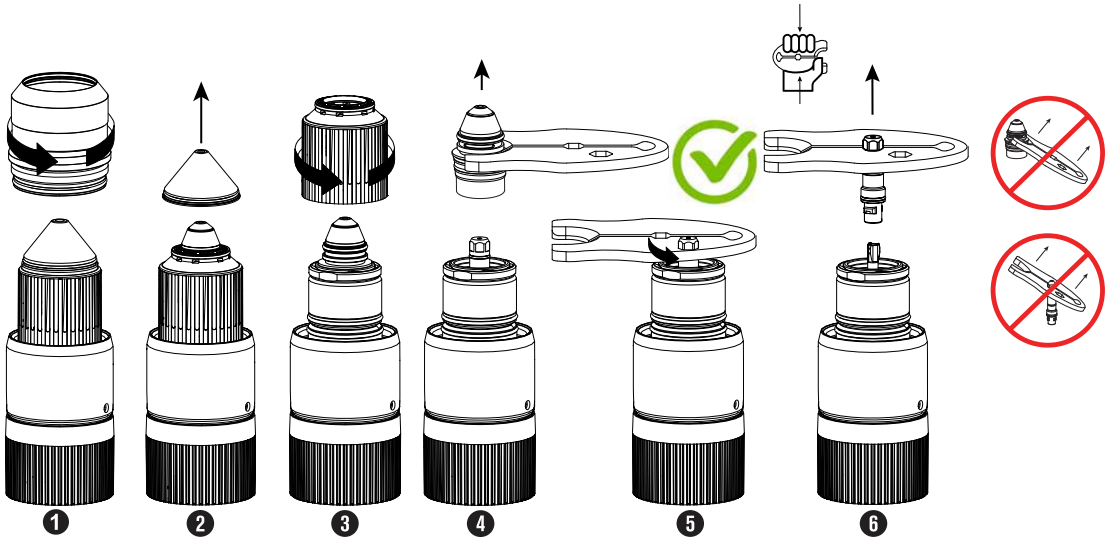


5. Use the consumable tool to turn the electrode counterclockwise.
6. Hold the tool tightly and pull straight out to correctly remove the electrode.
7. Put the consumables on a surface that is:
   - ☐ Clean
   - ☐ Dry
   - ☐ Oil-free

## Examine the consumable parts

The task involves examining, cleaning, and replacing the consumable parts of the XPR plasma cutting system as necessary, and reinstalling them before powering the system.

Before you begin:

- Remove the power from the cutting system on page 249
- Remove the torch and consumable parts on page 143

1. Examine the consumable parts for damage and excess wear.

**Table 32 -** Inspection tasks for consumables

| Inspect | Look for | Action if found |
|---|---|---|
| **Shield cap** 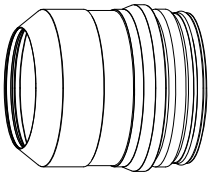 | Erosion or missing material<br>Cracks<br>Melted, eroded, or missing material<br>Damaged O-rings | Replace the shield cap. |
| | Molten material attached | If there is no damage to the shield cap, you can remove the molten material.<br>If there is damage, replace the shield cap. |
| | Dry O-rings | Apply a thin film of silicone lubricant (027055) to O-rings that appear dry. |
| **Shield** 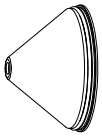 | A center hole that is not circular<br>Damaged O-rings | Replace the shield. |
| | Over-lubricated O-rings | Use a clean, lint-free cloth to remove excess lubricant. |
| | Dry O-rings | Apply a thin film of silicone lubricant (027055) to O-rings that appear dry. |
| **Nozzle retaining cap** 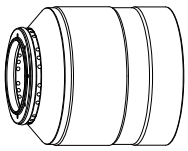 | Damage<br>Poor cut quality after replacing other consumables<br>Damaged O-rings | Replace the nozzle retaining cap. |
| | Dry O-rings | Apply a thin film of silicone lubricant (027055) to O-rings that appear dry. |

**Table 32 -** Inspection tasks for consumables (continued)

| Inspect | Look for | Action if found |
|---|---|---|
| **Nozzle** 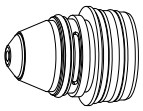 | Erosion or missing material<br>Blocked gas holes<br>A center hole that is not circular<br>Damaged O-rings | Replace the nozzle. |
| | Over-lubricated O-rings | Use a clean, lint-free cloth to remove excess silicone lubricant. |
| | Dry O-rings | Apply a thin film of silicone lubricant (027055) to O-rings that appear dry. |
| **Swirl ring** | Chips or cracks<br>Blocked gas holes<br>Damaged O-rings | Replace the swirl ring. |
| | Dirt or debris | Use compressed air to remove dirt or debris.<br>Replace the swirl ring if you find damage. |
| | Over-lubricated O-rings | Use a clean, lint-free cloth to remove excess silicone lubricant. |
| | Dry O-rings | Apply a thin film of silicone lubricant (027055) to O-rings that appear dry. |
| **Electrode** 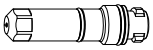 | Damaged O-rings | Replace the electrode. Use the electrode torque tool (429013) to correctly tighten the electrode. |
| | Over-lubricated O-rings | Use a clean, lint-free cloth to remove excess lubricant. |
| | Dry O-rings | Apply a thin film of silicone lubricant (027055) to O-rings that appear dry. |
| | Emitter wear<br>For guidance about how to identify emitter wear, refer to Indicators of emitter wear on page 259. | Replace the electrode and nozzle. Use the electrode torque tool (429013) to correctly tighten the electrode. |

If an electrode needs replacement because of emitter wear, always replace the nozzle at the same time as the electrode.

2. If any consumable part needs replacement, refer to Install the consumables on page 149.
3. Clean the consumable parts that do not need replacement:
   a. Use a clean, lint-free cloth to wipe the internal and external surfaces.
   b. Use compressed air to remove debris from internal and external surfaces.

      The nozzle retaining cap can retain debris. Make sure to clean it thoroughly.
   c. Use **clean water** if you choose to wash consumables parts in water.

      Use water from the faucet to soak or rinse them. **Never use the water from a cutting table** to wash consumable parts. Cutting table water has contaminants that will damage consumable parts.
   d. Apply a thin film of silicone lubricant (027055) to any O-ring that looks dry.

      The O-rings should look shiny. Too much lubricant can prevent gas flow. Remove excess lubricant if found.
4. Before you supply power to the cutting system, install the following components:
   - ☐ Consumables in the torch.
   - ☐ Torch in the torch receptacle.

## Examine the torch

Check the torch for damage or excess wear on the O-rings, torch main body, and torch insulator.

Before you begin:

- Remove the power from the cutting system on page 249
- Remove the torch and consumable parts on page 143

1. Examine the torch for:
   - ☐ Damage or excess wear on the external O-rings that are on the front of the torch

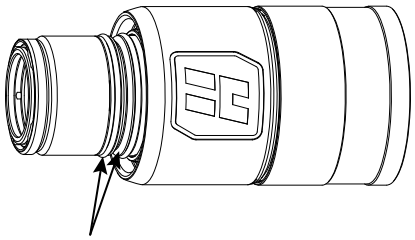

   - ☐ Damage or excess wear on the internal O-rings that are on the rear of the torch

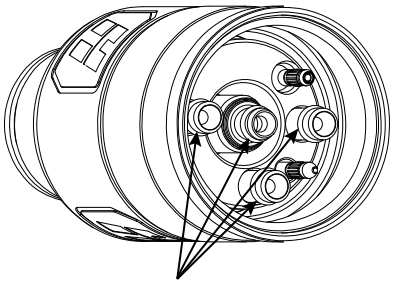

- ☐ Dry O-rings
- ☐ Over-lubricated O-rings
- ☐ Cracks in the torch main body
- ☐ Cracks in the torch insulator

2. Replace any O-rings that have damage or excess wear.

   Torch rebuild kits are available from Hypertherm. Refer to Preventive maintenance kits on page 434.

3. If you find cracks in the torch main body or torch insulator, replace the entire torch main body.

   Refer to Install the torch into the torch receptacle on page 145.

4. Replace the torch water tube if you find pitting or bends.

5. Clean and lubricate the torch if it does not need replacement:

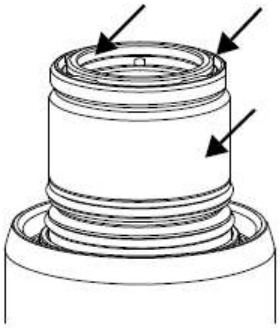

   a. Use a clean, lint-free cloth to wipe the internal and external surfaces.

   b. Use compressed air to remove debris from the internal and external surfaces.

      A cotton swab can be used for internal surfaces that are difficult to reach. Do not leave cotton fibers inside of the torch.

   c. Apply a thin film of silicone lubricant (027055) to any O-ring that does not need replacement and that looks dry.

      The O-rings should look shiny. Too much lubricant can prevent gas flow. Remove excess lubricant if found.

6. Before you supply power to the cutting system, install the following components:
   - ☐ Consumables in the torch.
   - ☐ Torch in the torch receptacle.

## Examine the torch receptacle

Damage or wear on the torch receptacle, especially on the O-ring and the receptacle body, can impact system performance. Regular checks allow for prompt replacement of worn parts, avoiding possible operational problems.

Before you begin: Remove the power from the cutting system on page 249.

1. Examine the torch receptacle.

   Look for:
   - ☐ Cuts, nicks, damage or excess wear on the O-ring on the torch receptacle

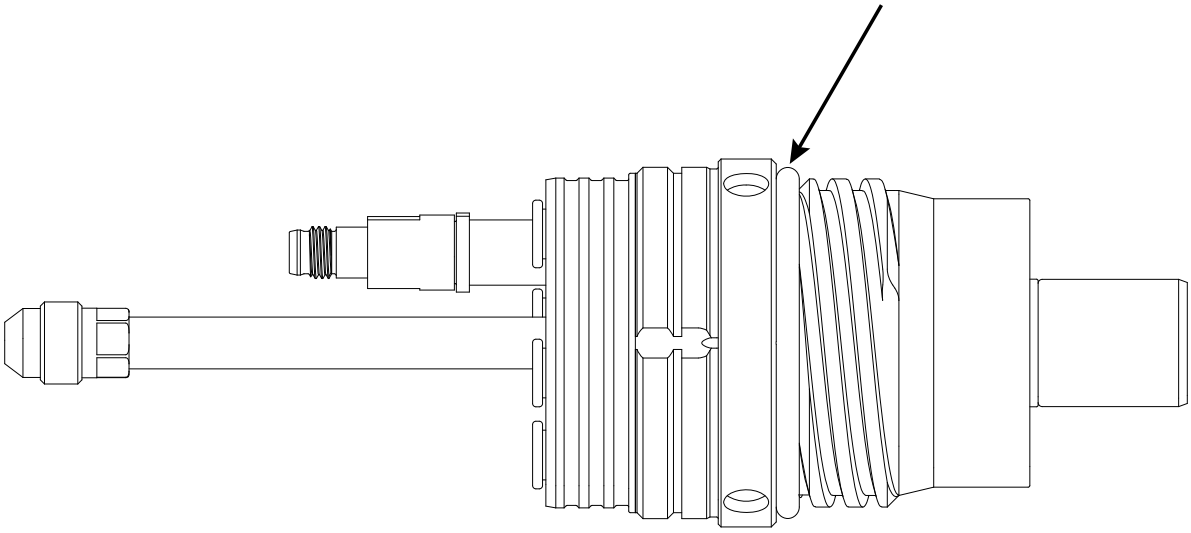

The O-ring on the torch receptacle does not require lubricant.
The O-ring is for dust protection only.

   - ☐ Cracks in the torch receptacle body

2. Replace the O-ring if it has damage or excess wear.

   Torch rebuild kits are available from Hypertherm. Refer to Preventive maintenance kits on page 434.

3. If you find cracks in the torch main body or torch insulator, replace the entire torch receptacle.

   Refer to Install the torch into the torch receptacle on page 145.

4. Clean the torch receptacle if it does not need replacement:
   a. Use a clean, lint-free cloth to wipe the internal and external surfaces.

b. Use compressed air to remove debris from the internal and external surfaces.

   A cotton swab can be used for internal surfaces that are difficult to reach. Do not leave cotton fibers inside the torch receptacle.

5. Before you supply power to the cutting system, make sure that the following components are installed:

   - ☐ Consumables in the torch.
   - ☐ Torch in the torch receptacle.

## Examine the torch lead

Inspect the torch lead for any damage, wear, or loose connections, and ensure it meets bend radius requirements; replace or adjust as necessary.

Before you begin: Before cutting system operation, examine the torch lead. Look for damage or wear.

1. Look for kinks, cracks, cuts, or excess wear.

   Replace the torch lead if you find these conditions.

2. Make sure that all connections between the torch and torch lead are tight.

   Tighten loose connections if found, but do not make the connections too tight. Do **not**use tools to tighten these connections.

3. If you have a power track that supports hoses, cables, and leads, examine their position on the track.

   Look for evidence that the hoses, cables, and leads are exceeding bend radius requirements during cutting system operation. Refer to Bend-radius requirements for hoses, cables, and leads on page 66.

4. Make adjustments if you find evidence of kinking, bending, or twisting.

# Indicators of emitter wear

Emitter wear can be described by the width, depth, and appearance of the electrode pit.

Emitter wear can indicate when to replace the electrode. The number of starts and the arc-on time can have an effect on emitter wear.

Emitter wear can cause the cut quality to degrade. Your cut quality requirements will indicate when to replace the electrode.

If an electrode needs replacement because of emitter wear, always replace the nozzle at the same time as the electrode. Use the electrode torque tool (429013) to correctly tighten the electrode.

The following guidelines for how to evaluate emitter wear apply to hafnium-emitter electrodes:

- The face of a new electrode looks shiny and smooth.

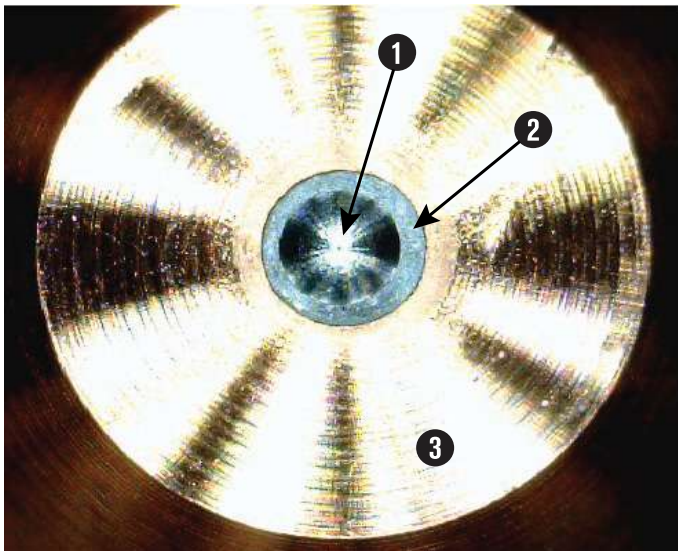


**1** Electrode pit

**2** Hafnium emitter

**3** Electrode face

- If the electrode pit diameter extends beyond the hafnium, as shown, replace the electrode and nozzle.

- If you see a non-symmetrical, rough-edged pit and rough-surfaced electrode face, replace the electrode and nozzle. Always replace the nozzle at the same time as the electrode.

- In general, if the electrode pit depth exceeds the guidelines in the following table, replace the electrode and nozzle.

| Electrode amperage | Replacement pit depth [1] | Description |
|---|---|---|
| < 130 A | ≥ 1 mm (0.04 in) | In general, for electrodes less than 130 A, replace the electrode when the pit depth is 1 mm (0.04 in) or greater. |
| ≥ 130 A and < 220 A | ≥ 1.25 mm (0.05 in) | In general, for electrodes greater than or equal to 130 A and less than 220 A, replace the electrode when the pit depth is 1.25 mm (0.05 in) or greater. |
| ≥ 220 A | ≥ 1.5 mm (0.06 in) | In general, for electrodes greater than or equal to 220 A, replace the electrode when the pit depth is 1.5 mm (0.06 in) or greater. |

1 Based on your cut-quality requirements, it can be necessary to replace your electrode at a pit depth that is shallower or deeper than these guidelines.

# Measure the pit depth of an electrode

The pit depth of an electrode refers to the depth of the wear on the hafnium emitter found in the center of the electrode

Before you begin:

- Remove the power from the cutting system on page 249
- Remove the torch and consumable parts on page 143
- Use an electrode pit-depth gauge to measure the pit depth on the electrode.

  A pit-depth gauge is available from Hypertherm. Refer to Other consumable and torch parts on page 422.

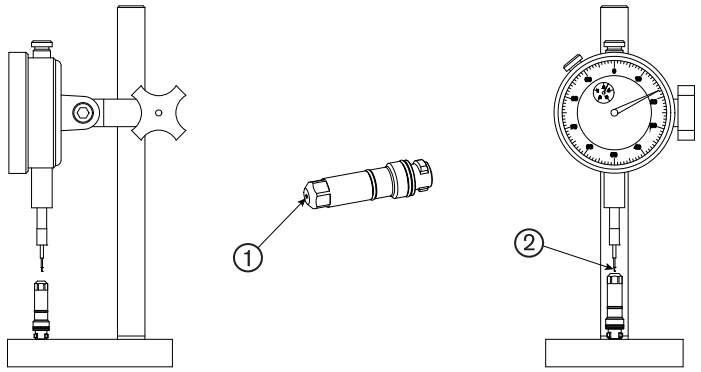


**1** Electrode pit

**2** Pit-depth gauge

The electrode shown is not to scale.

## Coolant maintenance

If the CNC alerts you that the coolant level is low, remove the power from the cutting system and refill the coolant reservoir **immediately.**

Refer to Troubleshooting for low coolant flow on page 326 for more information.

**WARNING**

**COOLANT CAN BE IRRITATING TO SKIN AND EYES AND HARMFUL OR FATAL IF SWALLOWED**

Propylene glycol and benzotriazole are irritating to skin and eyes, and harmful or fatal if swallowed.

When you come into contact, flush skin or eyes with water. If swallowed, seek immediate medical attention.

***NOTICE***

**LOW COOLANT LEVELS CAN DAMAGE THE CUTTING SYSTEM AND COOLANT PUMP**

There is a risk of serious damage to the cutting system and to the coolant pump if you operate the cutting system with no coolant or with low coolant. If your coolant pump is damaged, pump replacement can be necessary.

Never operate the cutting system if you get a low coolant level notice.

***NOTICE***

**AUTOMOTIVE ANTIFREEZE CAN DAMAGE THE TORCH COOLANT SYSTEM**

Antifreeze contains chemicals that can damage the torch coolant system.

Never use automotive antifreeze in place of Hypertherm coolant.

**NOTICE**

**INCORRECT COOLANT CAN DAMAGE THE CUTTING SYSTEM**

Refer to Coolant requirements on page 57 for the correct type of coolant to use.

## Calculations for total coolant volume estimates

Use these calculations to get an estimate for the total coolant volume necessary for your plasma cutting system.

The capacity of the coolant reservoir for the plasma cutting system is 22.7 liters – 45 liters (6 U.S. gallons – 12 U.S. gallons). A cutting system with long leads requires more coolant than a cutting system with short leads.

For coolant installation steps, refer to Overview of cutting system coolant on page 209.

### Total estimated volume in liters

| | | | | | | |
|---|---|---|---|---|---|---|
| 26 | + | 0.2534 | X | Length of leads (**in meters**) between the plasma power supply and gas connect console for your cutting system | = | Total estimated volume (in liters) |

### Total estimated volume in U.S. gallons

| | | | | | | |
|---|---|---|---|---|---|---|
| 6.8 | + | 0.0204 | X | Length of leads (**in feet**) between the plasma power supply and gas connect console for your cutting system | = | Total estimated volume (in U.S. gallons) |

## Coolant replacement and its significance

Hypertherm recommends that you replace all of the coolant at least once every 6 months, as part of routine preventive maintenance. More frequent replacement can be necessary because of environmental conditions including but not limited to contaminants in your coolant or diagnostic codes that indicate coolant problems.

Adding new coolant to the reservoir when the coolant level is low is **not** the same as replacing all of the coolant. **All** of the coolant must be removed to flush the coolant system.

Before refilling the cutting system with new coolant, refer to Remove old coolant from the system on page 264.

For coolant installation steps, refer to Overview of cutting system coolant on page 209.

The use of old coolant can decrease coolant flow, which can cause higher torch temperatures that shorten the life of consumable parts.

For instructions about preventive maintenance (such as weekly, monthly, and yearly tasks), refer to the *XPR Preventative Maintenance Program (PMP) Instruction Manual (809490)*.

## Remove old coolant from the system

Remove all of the old coolant from the system before you add new coolant.

Before you begin: Remove the power from the cutting system on page 249.

1. Remove the right external panel from the plasma power supply (this is the panel on the right when you look at the front of the unit).

   M6 (10 mm hex) screws hold the panel in position.

2. To remove old coolant from the coolant reservoir:
   a. Connect a tube with a 3/8-inch inner diameter to the outlet of the valve on the bottom of the reservoir.
   b. Put the other end of the tube into an empty container that holds the approximate total coolant volume for your cutting system.
   c. Open the valve that is located on the bottom of the reservoir.
   d. Remove the cap from the reservoir inlet to let the coolant flow out of the reservoir.
3. To remove the old coolant from the heat exchanger:
   a. Keep one end of the tube with the 3/8-inch inner diameter connected to the valve on the bottom of the reservoir and the other end of the tube in the container.
   b. Remove the coolant return hose from the rear of the plasma power supply.

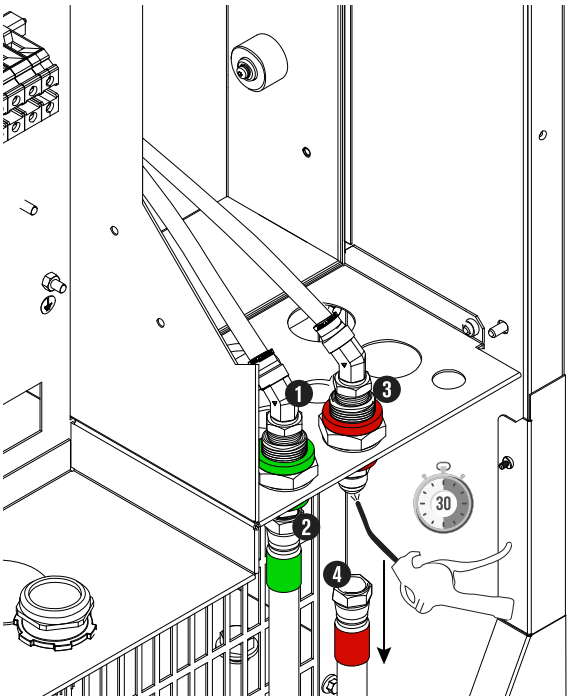


**1** Coolant supply (green)

**2** Coolant supply hose (green)

**3** Coolant return (red)

**4** Coolant return hose (red)

c. Attach compressed air (no more than 6.89 bar/100 psi) to the coolant return hose fitting on the rear of the plasma power supply at the location where the return coolant hose (red band) was connected before.

d. For no longer than 30 seconds, use the compressed air to blow all of the coolant back into to the reservoir and filter housing.

> The coolant is necessary to lubricate surfaces that must turn freely. If air flows through the cutting system for longer than 30 seconds, it can remove the coolant that is necessary for lubrication.

e. Close the valve at the bottom of the reservoir and remove the tube with the 3/8-inch inner diameter from the outlet.

> Do not keep the tube with the 3/8-inch diameter in the of the plasma power supply.

f. Keep the coolant return hose (red band) disconnected from the rear of the plasma power supply.

g. Put a container under the pump plug.

h. Remove the plug and coolant-pump screen and set them to the side.

i. Remove the coolant supply hose (green band) from the rear of the plasma power supply.

j. Attach compressed air (no more than 3.45 bar/50 psi) to the coolant supply hose fitting on the rear of the plasma power supply where the coolant supply hose (green band) was connected before.

k. For no more than 30 seconds, use the compressed air to blow all of the coolant into the container.

l. Keep the coolant supply hose (green band) disconnected.

The coolant is necessary to surfaces that turn freely. If air flows through the cutting system for longer than 30 seconds, it can remove the coolant necessary for lubrication.

4. Clean and replace the coolant-pump screen if necessary:

   a. Clean the coolant-pump screen.

   b. Rinse the screen with water if you find debris.

   c. Examine the coolant-pump screen.

   d. If you find damage on the coolant-pump screen, replace it (127559).

   e. Install the coolant-pump screen.

   f. Wipe the O-ring on the plug.

   g. Make sure that the O-ring is free of debris, cracks, and dents.

   h. Install the plug on the coolant pump housing.

5. To remove the old coolant from the filter housing and replace the coolant filter:

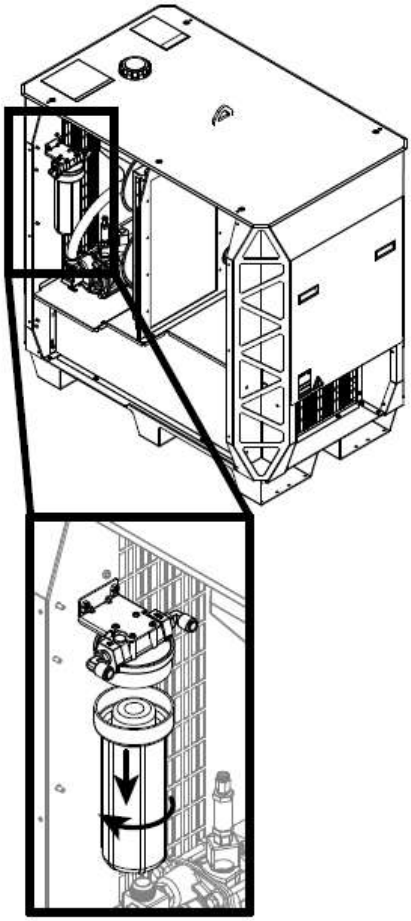

a. Remove the filter housing from the inner part of the plasma power supply.

b. Discard all of the coolant from the inner part of the filter housing.

c. Remove and discard the coolant filter.

d. Examine the filter housing for debris.

e. Rinse the filter housing to remove debris, if found.

f. Install a new coolant filter (027005).

g. Install the filter housing.

6. To remove the old coolant from hoses and leads:

Cutting system hoses and leads can hold a large volume of coolant.

Make sure to remove all of the old coolant from the hoses and leads. If you do not, the new coolant will mix with the old coolant. This will cause faster deterioration of the new coolant.

a. Put the disconnected end of the coolant return hose into an empty container.

Use a container that holds the approximate total coolant volume for your cutting system.

b. Attach compressed air (no more than 6.89 bar/100 psi) to the disconnected end of the coolant supply hose (green band).

c. For approximately 3 minutes, inject compressed air into the coolant supply hose fitting to force coolant to flow out of the coolant return hose (red band) into an empty container.

d. After 3 minutes, look for coolant that flows out of the coolant return hose (red band).

e. Do the previous step again until coolant flow from the coolant return hose (red band) stops.

f. When the coolant flow from the coolant return hose (red band) stops, connect the two hoses to the rear of the plasma power supply.

# 8 Diagnostics and Troubleshooting

## Safety considerations

Before you start troubleshooting for a problem, make sure to read, understand, and comply with all of the safety instructions.

For more safety information, refer to Qualifications of service personnel on page 43 and the *Safety and Compliance Manual (80669C)*.

**⚠ WARNING**

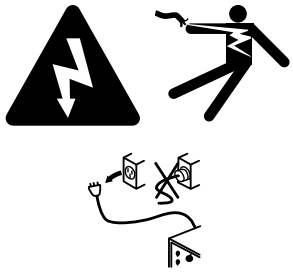

**ELECTRIC SHOCK CAN KILL**

The plasma power supply contains dangerous electric voltages that can seriously injure or kill you. Even if the plasma power supply is turned OFF, you can still get a serious electric shock if the plasma power supply remains connected to an electric power source.

Use extreme caution if you do diagnosis or maintenance tasks when the plasma power supply remains connected to an electric power source and the outer cover or panels are removed. All work that requires removal of the plasma power supply outer cover or panels must be done by a qualified technician. Refer to the *Safety and Compliance Manual (80669C)* for more safety information.

**WARNING**

**ELECTRIC SHOCK CAN KILL**

The plasma power supply contains dangerous electric voltages that can seriously injure or kill you. Even if the plasma power supply is turned OFF, you can still get a serious electric shock if the plasma power supply remains connected to an electric power source.

Use extreme caution if you do diagnosis or maintenance tasks when the plasma power supply remains connected to an electric power source and the outer cover or panels are removed.

**WARNING**

**ELECTRIC SHOCK CAN KILL**

If the line-disconnect switch is not in the OFF position you can get a serious electric shock. Electric shock can seriously injure or kill you.

The line-disconnect switch must be in the OFF position before you connect the power cord to the cutting system. It must REMAIN in the OFF position until all installation steps are complete. In the United States, use a "lock out/tag out" procedure until installation is complete. In other countries, follow the appropriate national and local safety procedures. Refer to the *Safety and Compliance Manual (80669C)* for more safety information.

**WARNING**

**ELECTRIC SHOCK CAN KILL**

Voltages in the cutting system can cause serious electric shock. Electric shock can seriously injure or kill you.

When the line-disconnect switch is in the ON position, there is line voltage throughout the cutting system. Use extreme caution if you do diagnosis or maintenance tasks when the line-disconnect switch is in the ON position.

## ⚠ WARNING

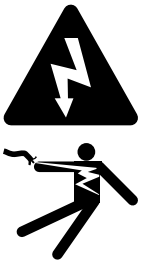

**ELECTRIC SHOCK CAN KILL**

Voltages at the terminal block and contactors can cause injury or death.

When the line-disconnect switch is in the ON position, there is line voltage at the contactor and the power distribution PCB. Use extreme caution when you measure the primary power in these areas.

## ⚠ WARNING

**HYDROGEN GAS CAN CAUSE AN EXPLOSION OR FIRE**

Hydrogen is a flammable gas that can cause an explosion or fire if it is not removed.

Keep flames away from cylinders and hoses that contain hydrogen. Keep flames and sparks away from the torch when using hydrogen as a plasma gas.

Consult your local safety, fire, and building code requirements for the storage and use of hydrogen.

Hypertherm recommends that you install an exhaust ventilation system to remove the hydrogen-enriched atmosphere that can collect when hydrogen is used as the plasma gas for cutting.

Flashback arrestors are REQUIRED to stop the spread of fire to the supply gases (unless a flashback arrestor is not available for a specific gas or pressure).

As an installer or user, you must supply the exhaust ventilation and flashback arrestors for your cutting system. You can get them from your cutting machine supplier.

## WARNING

**OXYGEN GAS CAN CAUSE A FIRE HAZARD**

If you use oxygen as the plasma gas for cutting, it can cause a potential fire hazard due to the oxygen-enriched atmosphere that collects. A fire can occur if oxygen is not removed.

Hypertherm recommends that you install an exhaust ventilation system to remove the oxygen-enriched atmosphere that can collect when oxygen is used as the plasma gas for cutting.

Flashback arrestors are REQUIRED to stop the spread of fire to the supply gases (unless a flashback arrestor is not available for a specific gas or pressure).

As an installer or user, you must supply the exhaust ventilation and flashback arrestors for your cutting system. You can get them from your cutting machine supplier.

## WARNING

**MACHINE MOTION CAN CAUSE INJURY**

The end-use customer and the cutting machine supplier are responsible for providing protection against the hazardous moving parts of this cutting system. Read and follow the instruction manual provided by the cutting machine supplier. Refer to the *Safety and Compliance Manual (80669C)* for more safety information.

## CAUTION

**MOVING BLADES CAN CAUSE INJURY**

Keep your hands away from moving parts.

**NOTICE**

**INCORRECT GAS PRESSURES CAN CAUSE BAD PERFORMANCE**

Gas leaks or pressure and flow rates that are outside of recommended ranges can cause problems with system performance, result in bad cut quality, and shorten the life of consumables.

If the quality of the gas is bad or if the pressure setting is incorrect, it can decrease cut quality, cut speed, and cut thickness capabilities.

Make sure the incoming gas pressure aligns with system specifications.

**NOTICE**

**RISK OF SPARKS**

Sparking and damage to the printed circuit board (PCB) can occur.

Never fire an arc when a temporary jumper wire is installed on the PCB.

**NOTICE**

**RUST IN GAS CYLINDERS CAN GET INTO THE GAS LINE**

Rust can collect at the bottom of gas cylinders. If the rust mixes with the gas, it can get into the gas line and decrease cut quality and performance.

When you move gas cylinders, make sure that you do not put them on their side, roll, or shake them.

# Initial inspection steps

Some conditions do not give a diagnostic code. For example, there are no diagnostic codes (and the cutting system does not work) if electric power is removed from the cutting system.

Before you try to identify a performance issue that does not cause a diagnostic code, make sure to first look for obvious problems or damage. Always start with the following inspection steps:

1. Make sure that the cutting system is connected to electric power.

   Refer to Connect electric power to the cutting system on page 151.

2. Make sure that the line-disconnect switch is set to ON.

Refer to Line-disconnect switch requirements on page 45.

3. Examine each PCB.
4. Use a licensed electrician to measure the line voltage between the terminals that are inside of the plasma power supply.

For many troubleshooting procedures it is necessary to remove the power from the cutting system. To do this safely, use the following procedure. Even if you use the remote on-off switch to set the power to OFF, electricity stays inside the cutting system. You can still get a serious electric shock when the cutting system is connected to an electric power source.

Before you remove the power from the cutting system, it can be helpful to move the torch to the edge of the cutting table and then move the torch lifter to its highest point. This gives easier access to the torch and consumable parts.

## Remove the power from the cutting system

1. Set the line-disconnect switch to the OFF position.
2. If the cutting system is not hard wired, disconnect the main power cord from the electric power.

   If the cutting system is hard wired, you cannot disconnect the main power cord from the electric power.

   Even if you remove the power from the cutting system, you can still get a serious electric shock if the plasma power supply stays connected to an electric power source. Use extreme care during service and maintenance when the cutting system is connected to electricity.
3. Make sure that the power-indicator LED is not illuminated on the plasma power supply, gas connect console, or TorchConnect console.

## Examine each PCB

1. Remove the power from the cutting system.
2. Remove the external panel or panels from the system component that has the PCB that you want to examine.

   Refer to PCB names and locations on page 277.
3. Examine the PCB for:
   - ☐ Loose or disconnected PCB connectors
   - ☐ Loose or disconnected PCB assemblies

- Discoloration
- Damage

4. If you find a PCB that is loose, reconnect it if possible.
5. If you find a PCB that has damage or discoloration, replace it.

   Refer to Plasma power supply parts on page 393 for part numbers and reorder information.
6. If each PCB is in good condition, measure the line voltage between the terminals inside of the plasma power supply.
7. If you cannot find or correct the problem, speak to your cutting machine supplier or regional Hypertherm Technical Service team.

It is necessary for the cutting system to have electric power to measure line voltage. Use extreme caution if you do diagnosis or maintenance tasks when the plasma power supply stays plugged in and the panels on the plasma power supply are removed.

**Figure 66 -** Main power cord wire color and terminal location

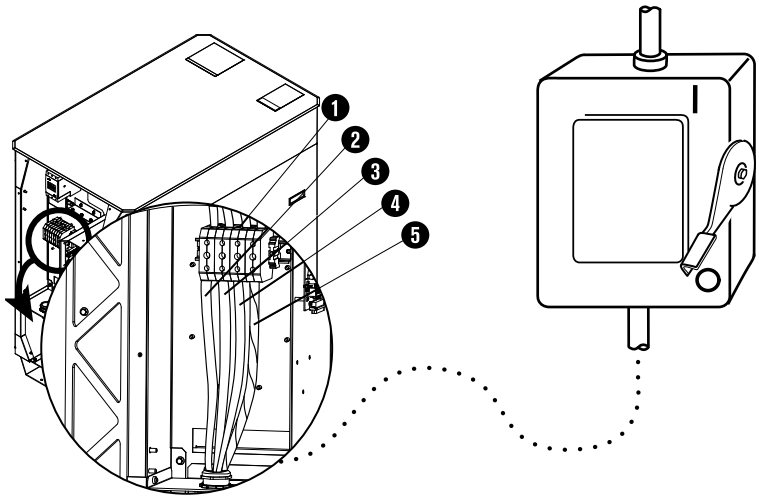

| | | Wire color codes for North America | Wire color codes for Europe, Asia, and most locations outside of North America |
|---|---|---|---|
| **1** | TB1 terminal | – | – |
| **2** | U | Black | Black |
| **3** | V | White | Blue |
| **4** | W | Red | Brown |
| **5** | GND (PE) (earth ground) ⏚ | Green/yellow | Green/yellow |

## Measure the line voltage between the terminals inside the plasma power supply

1. Measure the line voltage between the terminals in the following order:

   - ☐ U to V
   - ☐ U to W
   - ☐ V to W

   Do a check of each line to ground.

2. Find if the voltage between any two of the three lines is equal to the supply voltage.
3. If any one line is equal to or 10% greater than the other two lines, examine the incoming electric supply lines.

   If the incoming electric supply lines are good, speak to a licensed electrician or the electric company that supplies electricity for more information.

4. If the voltage between any two of the three lines is less than the supply voltage:

   a. Remove the power from the cutting system.

   b. Examine the power cord for damage.

   c. Examine the fuses at the line-disconnect switch for continuity.

   d. Repair or replace any parts that are defective or have damage, if found.

5. Continue to do these steps until the line voltage between any two of the three lines is equal to the supply voltage.

## PCB names and locations

PCB assemblies are in different parts of the system.

| PCB name | Location | Illustrations that show PCB locations |
|---|---|---|
| Power distribution PCB | Plasma power supply | Control parts - 1 on page 397 |
| Control PCB | Plasma power supply | Control parts - 2 on page 398 |
| Chopper assembly PCB | Plasma power supply | Control parts - 2 on page 398 |
| Start-circuit assembly PCB | Plasma power supply | Control parts - 1 on page 397 |
| I/O PCB | Plasma power supply | Control parts - 2 on page 398 |
| Fan power distribution PCB | Plasma power supply and cooler | Fans on page 395 |
| Control PCB | Gas connect console | Gas connect console manifold side parts on page 406 |
| High-frequency, high-voltage ignition PCB | Gas connect console | Gas connect console high-voltage side parts on page 405 |
| Ohmic contact PCB | TorchConnect console | TorchConnect console manifold side – view 1 on page 416 |
| Control PCB | TorchConnect console | TorchConnect console manifold side – view 1 on page 416 |
| Control PCB | Cooler | Cooler interior parts - view 2 on page 401 |

# Diagnostic code conventions

It is important to know these abbreviations and categories when you see diagnostic codes on the CNC or XPR web interface.

To do troubleshooting for the diagnostic codes that show on the CNC or XPR web interface, refer to the Diagnostic codes on page 278 table.

Diagnostic codes can include the following abbreviations:

- **GCC:** Gas connect console
- **CAN:** Controller area network
- **TCC:** Torch connect console
- **t/o:** Time out
- **HF:** High frequency
- **IGBT:** Insulated-gate bipolar transistor
- **Ch1, Ch2, Ch3:** Choppers

- **DC:** Direct current, current
- **Ind:** Inductor
- **MAGFAN:** Magnetics fan
- **Cooler Fan Tach:** Cooler fan tachometer

**Table 33 -** Diagnostic codes in the web interface

| Type | Description |
|---|---|
| **Information** | These codes contain information about the current conditions. In many cases, operator action is not necessary for Information codes. If action is necessary, the steps are usually simple. |
| **Alert** | These codes are for conditions that can decrease productivity or quality. **Find a solution to an Alert code as soon as possible.** |
| **Error** | These codes are for conditions that usually decrease productivity or quality, or cause damage to cutting system components. **Find a solution to an Error code as soon as possible.** |
| **Failure** | These codes are for conditions where you cannot start the arc until the condition is resolved. Failure mode protects the cutting system and system components from permanent damage. |

Certain codes can occur if the cutting system has old firmware. Make sure that you have the most recent XPR firmware. Log into the Xnet at www.hypertherm.com to download it.

If you cannot find or resolve the problem with the corrective actions in Diagnostic codes on page 278, speak to your cutting machine supplier or regional Hypertherm Technical Service team.

# Diagnostic codes

Use this table to identify a diagnostic code and where to find more troubleshooting information about it.

**Table 34 -** Diagnostic code descriptions

| Code | Priority | Description | XPR models | Corrective action |
|---|---|---|---|---|
| **500** | Failure | GCC->Main CAN t/o | All models | CAN communication troubleshooting for gas connect consoles on page 311 |
| **501** | Failure | Mix->Main CAN t/o | All models | CAN communication troubleshooting for mixing modules in OptiMix consoles on page 313 |
| **503** | Failure | TCC->Main CAN t/o | All models | CAN communication troubleshooting for TorchConnect consoles on page 316 |

**Table 34 -** Diagnostic code descriptions (continued)

| Code | Priority | Description | XPR models | Corrective action |
|---|---|---|---|---|
| **504** | Failure | Ch1->Main CAN t/o | All models | CAN communication troubleshooting for choppers on page 317 |
| **505** | Failure | Ch2->Main CAN t/o | XPR300™, XPR460™ | |
| **506** | Failure | Ch3->Main CAN t/o | XPR460 | |
| **507** | Failure | Main no CAN | All models | 1. CAN communication troubleshooting for choppers on page 317<br>2. CAN communication troubleshooting for gas connect consoles on page 311<br>3. CAN communication troubleshooting for mixing modules in OptiMix consoles on page 313 (if applicable)<br>4. CAN communication troubleshooting for TorchConnect consoles on page 316 |
| **508** | Error | CAN Busy | All models | |
| **509** | Failure | Cooler->Main CAN t/o | XPR460 | This code occurs when the cooler does not receive CAN communications for the main control at least once per second. If you continue to get this code, speak to your cutting machine supplier or regional Hypertherm Technical Service team.<br>▪ XPR action: Shut down<br>▪ Code cancels with: Remote on-off |
| **510** | Failure | Main->GCC CAN t/o | All models | CAN communication troubleshooting for gas connect consoles on page 311 |
| **511** | Failure | Main->Mix CAN t/o | All models | CAN communication troubleshooting for mixing modules in OptiMix consoles on page 313 |
| **513** | Failure | Main->TCC CAN t/o | All models | CAN communication troubleshooting for TorchConnect consoles on page 316 |
| **514** | Failure | Main->Ch1 CAN t/o | All models | CAN communication troubleshooting for choppers on page 317 |
| **515** | Failure | Main->Ch2 CAN t/o | XPR300, XPR460 | |
| **516** | Failure | Main->Ch3 CAN t/o | XPR460 | |

**Table 34 -** Diagnostic code descriptions (continued)

| Code | Priority | Description | XPR models | Corrective action |
|---|---|---|---|---|
| **519** | Failure | Main->Cooler CAN t/o | XPR460 | This code occurs when the main control does not receive CAN communications from the cooler at least once per second. If you continue to get this code, speak to your cutting machine supplier or regional Hypertherm Technical Service team.<br>▪ XPR action: None<br>▪ Code cancels with: Remote on-off |
| **520** | Alert | Ignite t/o (no pilot arc) | All models | Troubleshooting for an ignition timeout on page 320 |
| **521** | Alert | Pilot arc t/o (no arc transfer) | All models | Troubleshooting for a pilot arc timeout on page 321 |
| **522** | Alert | Preflow t/o | All models | Troubleshooting for gas flow process timeouts on page 322 |
| **523** | Error | Preflow purge t/o | All models | |
| **524** | Error | Cutflow purge t/o | All models | |
| **525** | Error | Inert gas purge t/o | All models | |
| **530** | Alert | Low psi–Line A | All models | Troubleshooting for low inlet gas pressure on page 322 |
| **531** | Alert | Low psi–Line B | All models | |
| **532** | Alert | Low psi–$H_2O$ | All models | Troubleshooting for low shield water pressure on page 323 |
| **533** | Alert | Low psi–F5 | All models | Troubleshooting for low inlet gas pressure on page 322 |
| **534** | Alert | Low psi–Shield | All models | Troubleshooting for low shield gas pressure on page 324 |
| **540** | Error | Low flow 1–Coolant | All models | Troubleshooting for low coolant flow on page 326 |
| **541** | Error | Low flow 2–Coolant | All models | |
| **542** | Failure | Low flow–Coolant | All models | |
| **543** | Error | High flow 1–Coolant | All models | Troubleshooting for high coolant flow on page 328 |
| **544** | Failure | High flow–Coolant | All models | |
| **550** | Alert | No plasma arc | All models | Troubleshooting for low current on page 329 |
| **552** | Alert | DC below limit–Ch1 | All models | |
| **553** | Alert | DC below limit–Ch2 | XPR300, XPR460 | |
| **554** | Alert | DC below limit–Ch3 | XPR460 | |

**Table 34 -** Diagnostic code descriptions (continued)

| Code | Priority | Description | XPR models | Corrective action |
|---|---|---|---|---|
| **555** | Failure | DC exceeds limit–Ch1 | All models | Troubleshooting for high current on page 330 |
| **556** | Failure | DC exceeds limit–Ch2 | XPR300, XPR460 | |
| **557** | Failure | DC exceeds limit–Ch3 | XPR460 | |
| **560** | Error | Over temp–Ch1 | All models | Troubleshooting for over-temperature faults for choppers and coolant on page 331 |
| **561** | Error | Over temp–Ch2 | XPR300, XPR460 | |
| **562** | Error | Over temp–Ch3 | XPR460 | |
| **570** | Alert | Start on powerup | All models | Troubleshooting for start switch faults on page 335 |
| **571** | Alert | Start on wait-start | All models | |
| **574** | Info | Start removed preflow | All models | |
| **575** | Info | Start removed ignite | All models | |
| **576** | Info | Start removed pilot | All models | |
| **577** | Info | Start removed ramp up | All models | |
| **580** | Error | Over temp–Ind 1 | All models | Troubleshooting for over-temperature faults for inductors and transformers on page 337 |
| **581** | Error | Over temp–Ind 2 | All models | |
| **582** | Error | Over temp–Ind 3 | XPR300, XPR460 | |
| **583** | Error | Over temp–Ind 4 | XPR300, XPR460 | |
| **584** | Error | Over temp–Ind 5 | XPR460 | |
| **585** | Error | Over temp–Ind 6 | XPR460 | |
| **586** | Error | Over temp–Xfmr | All models | |
| **587** | Error | Over temp–Coolant | All models | Troubleshooting for over-temperature faults for choppers and coolant on page 331 |
| **588** | Failure | Fan timeout | All models | Troubleshooting for a fan timeout on page 340 |
| **589** | Error | Over temp–Xfmr2 | XPR460 | Troubleshooting for over-temperature faults for inductors and transformers on page 337 |
| **600** | Error | No TCC found | All models | CAN communication troubleshooting for TorchConnect consoles on page 316 |

**Table 34 -** Diagnostic code descriptions (continued)

| Code | Priority | Description | XPR models | Corrective action |
|---|---|---|---|---|
| **601** | Error | No Chopper 1 found | All models | CAN communication troubleshooting for choppers on page 317 |
| **602** | Error | No GCC found | All models | CAN communication troubleshooting for gas connect consoles on page 311 |
| **604** | Alert | No Chopper 2 found | XPR300, XPR460 | CAN communication troubleshooting for choppers on page 317 |
| **605** | Error | No cooler found | XPR460 | This code occurs after power is supplied and the main control does not receive CAN communications for the cooler. If you continue to get this code, speak to your cutting machine supplier or regional Hypertherm Technical Service team.<br>▪ XPR action: None<br>▪ Code cancels with: Remote on-off |
| **606** | Alert | No Chopper 3 found | XPR460 | CAN communication troubleshooting for choppers on page 317 |
| **610** | Failure | Ch1 Torch Protect ChA | All models | Troubleshooting for consumable part failure or no chopper current on page 341 |
| **611** | Failure | Ch1 Torch Protect ChB | All models | |
| **612** | Failure | Ch2 Torch Protect ChA | XPR300, XPR460 | |
| **613** | Failure | Ch2 Torch Protect ChB | XPR300, XPR460 | |
| **614** | Failure | Ch3 Torch Protect ChA | XPR460 | |
| **615** | Failure | Ch3 Torch Protect ChB | XPR460 | |
| **620** | Alert | Arc stretch detected | All models | Troubleshooting for a ramp-down error on page 342 |
| **621** | Failure | Over voltage–DC bus | All models | Troubleshooting for high DC bus voltage on page 343 |
| **622** | Failure | Under voltage–DC bus | All models | Troubleshooting for low DC bus voltage on page 343 |
| **623** | Error | Ch1 DC at idle | All models | Troubleshooting for idle choppers with current on page 345 |
| **624** | Error | Ch2 DC at idle | XPR300, XPR460 | |
| **625** | Error | Ch3 DC at idle | XPR460 | |

**Table 34 -** Diagnostic code descriptions (continued)

| Code | Priority | Description | XPR models | Corrective action |
|---|---|---|---|---|
| **626** | Alert | No DC output–Ch1 | All models | Troubleshooting for consumable part failure or no chopper current on page 341 |
| **627** | Alert | No DC output–Ch2 | XPR300, XPR460 | |
| **628** | Alert | No DC output–Ch3 | XPR460 | |
| **631** | Failure | DC at wait-start | All models | Troubleshooting for current sensor faults on page 345 |
| **640** | Info | No error | All models | No operator action is necessary.<br>▪ XPR action: None<br>▪ Code cancels with: Is not applicable. |
| **642** | Info | System powered | All models | No operator action is necessary.<br>▪ XPR action: None<br>▪ Code cancels with: Start or set process; remote on-off |
| **643** | Info | No process loaded | All models | Select a process to stop the Initial Checks (2) state of operation and start the Gas Purge/Pump On state (3). There is no limit for how long the system waits for input. Refer to Sequence of operation on page 217.<br>▪ XPR action: None<br>▪ Code cancels with: Start or set process; remote on-off |
| **645** | Info | System is off | All models | No operator action is necessary. Plasma cutting system operation continues when the remote on-off switch is set to the ON position. Refer to Sequence of operation on page 217.<br>▪ XPR action: None<br>▪ Code cancels with: Start or set process; remote on-off |
| **646** | Info | System turned off | All models | No operator action is necessary. Plasma cutting system operation continues when the remote on-off switch is set to the ON position. Refer to Sequence of operation on page 217.<br>▪ XPR action: Shut down<br>▪ Code cancels with: Start or set process; remote on-off |

**Table 34 -** Diagnostic code descriptions (continued)

| Code | Priority | Description | XPR models | Corrective action |
|---|---|---|---|---|
| **647** | Info | Process selected | All models | No operator action is necessary.<br>▪ XPR action: None<br>▪ Code cancels with: Start or set process; remote on-off |
| **651** | Alert | HF timeout | XPR460 | This code occurs when the high frequency output is on for more than 350 ms. If you continue to get this code, speak to your cutting machine supplier or regional Hypertherm Technical Service team.<br>▪ XPR action: None<br>▪ Code cancels with: Set process; remote on-off |
| **652** | Error | Block def over limit | XPR460 | This code occurs during the ramp-up or ramp-down state if the process block time definition is more than one second. If you continue to get this code, speak to your cutting machine supplier or regional Hypertherm Technical Service team.<br>▪ XPR action: Shut down<br>▪ Code cancels with: Remote on-off |
| **653** | Error | Block time over limit | XPR460 | This code occurs during the ramp-up or ramp-down state if the process block timer is more than one second. If you continue to get this code, speak to your cutting machine supplier or regional Hypertherm Technical Service team.<br>▪ XPR action: Shut down<br>▪ Code cancels with: Remote on-off |
| **654** | Alert | Ch1 ArcOn Timeout | All models | Troubleshooting for arc timeouts during the Ignite state on page 346 |
| **655** | Alert | Current (DC) preflow | All models | Troubleshooting for current in chopper during preflow on page 346 |
| **656** | Error | Default case | XPR460 | This code occurs when a default case is run unintentionally. If you continue to get this code, speak to your cutting machine supplier or regional Hypertherm Technical Service team.<br>▪ XPR action: Shut down<br>▪ Code cancels with: Remote on-off |

**Table 34 -** Diagnostic code descriptions (continued)

| Code | Priority | Description | XPR models | Corrective action |
|---|---|---|---|---|
| **657** | Error | Bad block type | XPR460 | This code occurs when the block type is incorrect. If you continue to get this code, speak to your cutting machine supplier or regional Hypertherm Technical Service team.<br>▪ XPR action: Shut down<br>▪ Code cancels with: Remote on-off |
| **658** | Alert | Block def under limit | XPR460 | This code occurs when the process block duration is less than the minimum. If you continue to get this code, speak to your cutting machine supplier or regional Hypertherm Technical Service team.<br>▪ XPR action: End of cycle<br>▪ Code cancels with: Start or set process; remote on-off |
| **659** | Alert | State dur under limit | XPR460 | This code occurs when the state duration is less than the minimum. If you continue to get this code, speak to your cutting machine supplier or regional Hypertherm Technical Service team.<br>▪ XPR action: End of cycle<br>▪ Code cancels with: Start or set process; remote on-off |
| **660** | Error | Thermistor Fault–Ind 1 | All models | Use a digital multimeter to measure the resistance from the thermistor. Refer to Measure resistance from thermistors on page 307.<br>▪ XPR action: Shut down<br>▪ Code cancels with: Remote on-off |
| **661** | Error | Thermistor Fault–Ind 2 | All models | |
| **662** | Error | Thermistor Fault–Ind 3 | XPR300, XPR460 | |
| **663** | Error | Thermistor Fault–Ind 4 | XPR300, XPR460 | |
| **664** | Error | Thermistor Fault–Ind 5 | XPR460 | |
| **665** | Error | Thermistor Fault–Ind 6 | XPR460 | |
| **666** | Error | Thermistor Fault–Xfmr | All models | |
| **667** | Error | Thermistor Fault–Ch1 | All models | Use a digital multimeter to measure the resistance from the thermistor. Refer to Measure resistance from thermistors on page 307.<br>▪ XPR action: Ramp down<br>▪ Code cancels with: Remote on-off |
| **668** | Error | Thermistor Fault–Ch2 | XPR300, XPR460 | |
| **669** | Error | Thermistor Fault–Ch3 | XPR460 | |

**Table 34 -** Diagnostic code descriptions (continued)

| Code | Priority | Description | XPR models | Corrective action |
|---|---|---|---|---|
| **670** | Error | Thermistor Fault–Coolant | All models | Use a digital multimeter to measure the resistance from the thermistor. Refer to Measure resistance from thermistors on page 307.<br>▪ XPR action: Shut down<br>▪ Code cancels with: Remote on-off |
| **671** | Error | No Thermistor–Ind 1 | All models | |
| **672** | Error | No Thermistor–Ind 2 | All models | |
| **673** | Error | No Thermistor–Ind 3 | XPR300, XPR460 | |
| **674** | Error | No Thermistor–Ind 4 | XPR300, XPR460 | |
| **675** | Error | No Thermistor–Ind 5 | XPR460 | |
| **676** | Error | No Thermistor–Ind 6 | XPR460 | |
| **677** | Error | No Thermistor–Xfmr | All models | |
| **678** | Error | No Thermistor–Ch1 | All models | Make sure that the two wires for J9 are fully engaged. Use a digital multimeter to measure the resistance from the thermistor. Refer to Measure resistance from thermistors on page 307.<br>▪ XPR action: Ramp down<br>▪ Code cancels with: Remote on-off |
| **679** | Error | No Thermistor–Ch2 | XPR300, XPR460 | |
| **680** | Error | No Thermistor–Ch3 | XPR460 | |
| **681** | Error | No Thermistor–Coolant | All models | Use a digital multimeter to measure the resistance from the thermistor. Refer to Measure resistance from thermistors on page 307.<br>▪ XPR action: Shut down<br>▪ Code cancels with: Remote on-off |
| **682** | Error | No Thermistor–Xfmr2 | XPR460 | |
| **683** | Error | Thermistor Fault–Xfmr2 | XPR460 | |
| **691** | Error | Node reset | All models | Troubleshooting for a console reset message on page 347 |
| **695** | Alert | Low inlet $H_2$-Mix (OptiMix only) | All models | Troubleshooting for low inlet pressure for hydrogen, argon, or nitrogen on page 348 |
| **696** | Alert | Low inlet Ar-Mix (OptiMix only) | All models | |
| **697** | Alert | Low inlet $N_2$-Mix (OptiMix only) | All models | |
| **699** | Error | Mix Fault (OptiMix only) | All models | No operator action is necessary.<br>▪ XPR action: Ramp down<br>▪ Code cancels with: Set process; remote on-off |

**Table 34 -** Diagnostic code descriptions (continued)

| Code | Priority | Description | XPR models | Corrective action |
|---|---|---|---|---|
| **700** | Alert | Gas Inlet F5–GCC (VWI or OptiMix only) | All models | Troubleshooting for low inlet pressure for hydrogen, argon, or nitrogen on page 348 |
| **701** | Alert | Low Inlet $H_2O$–GCC (VWI or OptiMix only) | All models | |
| **702** | Alert | Shield Gas Inlet $N_2$–TCC | All models | ▪ Troubleshooting for shield gas inlet pressure in the TorchConnect console on page 352<br>▪ Troubleshooting for process-gas inlet pressure faults in the TorchConnect console for OptiMix systems on page 354 |
| **703** | Alert | Shield Gas Inlet $O_2$–TCC | All models | Troubleshooting for shield gas inlet pressure in the TorchConnect console on page 352 |
| **704** | Alert | Shield Gas Inlet Air–TCC | All models | |
| **705** | Alert | Shield Gas Inlet Ar–TCC | All models | ▪ Troubleshooting for shield gas inlet pressure in the TorchConnect console on page 352<br>▪ Troubleshooting for process-gas inlet pressure faults in the TorchConnect console for OptiMix systems on page 354 |
| **706** | Error | No sensor P1–TCC | All models | Troubleshooting for pressure transducer faults on page 356 |
| **707** | Error | No sensor P2–TCC | All models | |
| **708** | Error | No sensor P3–TCC | All models | |
| **709** | Error | No sensor P4–TCC | All models | |
| **710** | Error | No sensor P5–TCC | All models | |
| **711** | Error | No sensor P14–TCC | All models | |
| **712** | Error | No sensor P6–GCC (VWI or OptiMix only) | All models | |
| **713** | Error | No sensor P7–GCC (VWI or OptiMix only) | All models | |
| **714** | Error | No sensor P8–GCC (VWI or OptiMix only) | All models | |
| **715** | Error | No sensor P9–GCC | All models | |
| **716** | Alert | Process Invalid | All models | Troubleshooting for invalid processes on page 358 |

**Table 34 -** Diagnostic code descriptions (continued)

| Code | Priority | Description | XPR models | Corrective action |
|---|---|---|---|---|
| **717** | Alert | Low voltage–mix (Opti-Mix only) | All models | Confirm the output voltage of the 24 VDC power source in the gas connect console. Make sure that the output voltage is 24 VDC.<br>▪ XPR action: Ramp down<br>▪ Code cancels with: Set process; remote on-off |
| **718** | Alert | High voltage–mix | All models | |
| **719** | Alert | Mix pwm 100% | All models | Troubleshooting for duty cycle limit on proportional valve supply voltage on page 364 |
| **720** | Alert | Mix P21 >Pin | All models | Troubleshooting for pressure out is greater than pressure in on page 364 |
| **721** | Error | Mix checksum | All models | Troubleshooting for gas mixture faults on page 365 |
| **722** | Error | Mix flow cal | All models | |
| **723** | Error | Mix pressure cal | All models | |
| **724** | Error | Mix I2C1 | All models | Troubleshooting for gas mixture communication errors on page 366 |
| **725** | Error | Mix I2C2 | All models | |
| **726** | Error | Mix system clock | All models | Troubleshooting for gas mixture faults on page 365 |
| **727** | Error | Bad Temp Reading–Ch1 | XPR460 | These codes occur when consecutive temperature samples are different by more than 2°. If you continue to get this code, speak to your cutting machine supplier or regional Hypertherm Technical Service team.<br>▪ XPR action: Ramp down<br>▪ Code cancels with: Start or set process; remote on-off |
| **728** | Error | Bad Temp Reading–Ch2 | XPR460 | |
| **729** | Error | Bad Temp Reading–Ch3 | XPR460 | |
| **730** | Alert | Solenoid error V1 | All models | Troubleshooting for solenoid valve V1 in the Torch-Connect console on page 367 |

**Table 34 -** Diagnostic code descriptions (continued)

| Code | Priority | Description | XPR models | Corrective action |
|---|---|---|---|---|
| **733** | Alert | Solenoid error V4 | All models | Troubleshooting for solenoid valves V4 – V12 in the TorchConnect console on page 367 |
| **734** | Alert | Solenoid error V5 | All models | |
| **735** | Alert | Solenoid error V6 | All models | |
| **736** | Alert | Solenoid error V7 | All models | |
| **737** | Alert | Solenoid error V8 | All models | |
| **738** | Alert | Solenoid error V9 | All models | |
| **739** | Alert | Solenoid error V10 | All models | |
| **740** | Alert | Solenoid error V11 | All models | |
| **741** | Alert | Solenoid error V12 | All models | |
| **742** | Alert | Mix I2C1 Alert | All models | Troubleshooting for gas mixture communication errors on page 366 |
| **743** | Alert | Mix I2C2 Alert | All models | |
| **744** | Alert | Low Speed–MagFan 1 | All models | Troubleshooting for low fan speeds – MAGFAN on page 371 |
| **745** | Alert | Low Speed–MagFan 2 | All models | |
| **746** | Alert | Low Speed–MagFan 3 | XPR460 | |
| **747** | Alert | Low Speed–CabFan 1 | XPR460 | Troubleshooting for low fan speeds – CAB FAN 1 on page 372 |
| **748** | Alert | Low Speed–HxFan 1 | All models | Troubleshooting for low fan speeds – HXFAN on page 371 |
| **749** | Alert | Low Speed–HxFan 2 | XPR300, XPR460 | |
| **750** | Alert | Low Speed–CtrlFan 1 | XPR170™, XPR300 | This system does not use this code. |
| **751** | Alert | Low Speed–CtrlFan 2 | XPR170, XPR300 | This system does not use this code. |
| **752** | Error | Phase Fault–Ch1 | All models | Troubleshooting for phase errors in choppers on page 373 |
| **753** | Error | Phase Fault–Ch2 | XPR300, XPR460 | |
| **754** | Error | Phase Fault–Ch3 | XPR460 | |
| **755** | Alert | Low level–Coolant | All models | Fill the coolant reservoir with coolant. Refer to Fill the cutting system with coolant on page 209.<br>▪ XPR action: None<br>▪ Code cancels with: Set process; remote on-off |

**Table 34 -** Diagnostic code descriptions (continued)

| Code | Priority | Description | XPR models | Corrective action |
|---|---|---|---|---|
| **756** | Info | Leak test results | All models | Do a gas leak test on page 295 |
| **757** | Error | DC work exceeds limit | All models | Make sure that you have the most recent XPR firmware. You can log into the Xnet at www.hypertherm.com to download it. If the code continues, speak to your cutting machine supplier or regional Hypertherm Technical Service team.<br>▪ XPR action: End of cycle<br>▪ Code cancels with: Remote on-off |
| **758** | Alert | Main 24V dip | All models | Make sure that you have the most recent XPR firmware. You can log into the Xnet at www.hypertherm.com to download it. If the code continues, speak to your cutting machine supplier or regional Hypertherm Technical Service team.<br>▪ XPR action: None<br>▪ Code cancels with: Set process; remote on-off |
| **759** | Alert | GCC 24V bus low | All models | Make sure that you have the most recent XPR firmware. You can log into the Xnet at www.hypertherm.com to download it. If the code continues, speak to your cutting machine supplier or regional Hypertherm Technical Service team.<br>▪ XPR action: Ramp down<br>▪ Code cancels with: Set process; remote on-off |
| **763** | Alert | Coolant solenoid fault | XPR170, XPR300 | This system does not use this code. |
| **764** | Alert | Main contactor fault | All models | Troubleshooting for a main contactor fault on page 374 |
| **765** | Alert | Inrush contactor fault | XPR300, XPR460 | Troubleshooting for an inrush contactor fault on page 375 |
| **766** | Alert | Pump enable fault | All models | Troubleshooting for a pump-enable fault or remote-relay fault on page 375 |
| **767** | Alert | Remote relay fault | All models | |
| **768** | Alert | Gas Inlet – $O_2$ Line A | All models | Troubleshooting for gas inlet pressure faults on page 376 |
| **769** | Alert | Gas Inlet – Argon Line B | All models | ▪ Troubleshooting for gas inlet pressure faults on page 376<br>▪ Troubleshooting for process-gas inlet pressure faults in the TorchConnect console for OptiMix systems on page 354 |
| **770** | Alert | Gas Inlet – $N_2$ Line B | All models | |

**Table 34 -** Diagnostic code descriptions (continued)

| Code | Priority | Description | XPR models | Corrective action |
|---|---|---|---|---|
| **771** | Alert | Gas Inlet – Air Line A | All models | Troubleshooting for gas inlet pressure faults on page 376 |
| **772** | Alert | High inlet line A | All models | Decrease the air or $O_2$ inlet pressure.<br>▪ XPR action: Ramp down<br>▪ Code cancels with: Set process; remote on-off |
| **773** | Info | System reverted to VWI | XPR460 | This code occurs when the system changes from an OptiMix system to a VWI system as a result of an error condition. If you continue to get this code, speak to your cutting machine supplier or regional Hypertherm Technical Service team.<br>▪ XPR action: None<br>▪ Code cancels with: Start or set process; remote on-off |
| **774** | Alert | P5 >= P2 | All models | Increase the air inlet pressure.<br>▪ XPR action: Ramp down<br>▪ Code cancels with: Set process; remote on-off |
| **775** | Alert | Node update | All models | Refer to the *XPR Firmware Updates Field Service Bulletin (809820)*.<br>▪ XPR action: None<br>▪ Code cancels with: Start or set process; remote on-off |
| **776** | Alert | Wifi reset | All models | The wireless module was reset. Decrease the number of wireless connections to the plasma cutting system.<br>▪ XPR action: None<br>▪ Code cancels with: Start or set process; remote on-off |
| **777** | Alert | Pilot relay fault | All models | Troubleshooting for a pilot relay fault on page 377 |
| **778** | Alert | Hv relay fault | XPR170, XPR300 | This system does not use this code. |
| **779** | Error | Ch1 15V bus | All models | Troubleshooting for high or low chopper voltage on page 379 |
| **780** | Error | Ch2 15V bus | XPR300, XPR460 | |
| **781** | Error | Ch3 15V bus | XPR460 | |
| **782** | Alert | Low psi–P2 | All models | Increase the air inlet pressure.<br>▪ XPR action: None<br>▪ Code cancels with: Set process; remote on-off |

**Table 34 -** Diagnostic code descriptions (continued)

| Code | Priority | Description | XPR models | Corrective action |
|---|---|---|---|---|
| **784** | Error | Main 24V high | All models | Troubleshooting for high voltage on the 24 V power supply on page 379 |
| **785** | Alert | Cooler Fan1 Tach | XPR460 | These codes occur when feedback for a fan tachometer is less than the minimum. If you continue to get this code, speak to your cutting machine supplier or regional Hypertherm Technical Service team.<br>▪ XPR action: None<br>▪ Code cancels with: Start or set process; remote on-off |
| **786** | Alert | Cooler Fan2 Tach | XPR460 | |
| **787** | Alert | Cooler Fan3 Tach | XPR460 | |
| **788** | Alert | Cooler Fan4 Tach | XPR460 | |
| **789** | Alert | Fieldbus fault | All models | This code occurs when there is an error during communication with the fieldbus (field bus) module. If you continue to get this code, speak to your cutting machine supplier or regional Hypertherm Technical Service team.<br>▪ XPR action: None<br>▪ Code cancels with: Start or set process; remote on-off |
| **790** | Error | Eco mode timeout | XPR460 | This code occurs when the system cannot find choppers after it gets out of eco mode. If you continue to get this code, speak to your cutting machine supplier or regional Hypertherm Technical Service team.<br>▪ XPR action: None<br>▪ Code cancels with: Remote on-off |
| **791** | Error | No Thermistor–Con Xfmr | All models | Use a digital multimeter to measure the resistance from the thermistor. Refer to Measure resistance from thermistors on page 307.<br>▪ XPR action: Shut down<br>▪ Code cancels with: Remote on-off |
| **792** | Error | Thermistor Fault–Con Xfmr | All models | Use a digital multimeter to measure the resistance from the thermistor. Refer to Measure resistance from thermistors on page 307.<br>▪ XPR action: Shut down<br>▪ Code cancels with: Remote on-off |
| **793** | Error | Over temp–Con Xfmr | All models | Troubleshooting for over-temperature faults for inductors and transformers on page 337 |

**Table 34 -** Diagnostic code descriptions (continued)

| Code | Priority | Description | XPR models | Corrective action |
|---|---|---|---|---|
| **794** | Alert | No MAC found | All models | This code occurs when the main control cannot use a MAC address from the EEPROM. If you continue to get this code, speak to your cutting machine supplier or regional Hypertherm Technical Service team.<br>▪ XPR action: None<br>▪ Code cancels with: Start or set process; remote on-off |
| **795** | Alert | Cooler 24V | XPR460 | This code occurs when the 24 VDC bus is less than 20 V. If you continue to get this code, speak to your cutting machine supplier or regional Hypertherm Technical Service team.<br>▪ XPR action: None<br>▪ Code cancels with: Start or set process; remote on-off |
| **797** | Error | Firmware Version Mismatch | XPR460 | Make sure that you have the most recent XPR firmware. You can log into the Xnet at www.hypertherm.com to download it. If you continue to get this code, speak to your cutting machine supplier or regional Hypertherm Technical Service team.<br>▪ XPR action: None<br>▪ Code cancels with: Remote on-off |

Refer to Sequence of operation on page 217 for descriptions of cutting system operations.

# General troubleshooting procedures

## Causes of decreased consumable life

These are some causes of decreased consumable life that can occur frequently.

### Cuts are started or stopped off the surface of the workpiece.

To extend consumable life, **start and stop all cuts on the surface of the workpiece**.

### The cut settings are not correct.

One or more of the following settings is not correct:

- Arc current
- Arc voltage
- Travel speed
- Motion delay
- Gas flow rates
- Initial torch height

Use the correct settings for the type and thickness of the metal that you are cutting. Refer to the cut charts in the *XPR Cut Charts Instruction Manual (809830)*.

### The cutting material is magnetic.

When possible, do not cut metal that is magnetic or that can easily become magnetic. For example, do not cut armor plate that has a high nickel content.

## Cutting faults that can occur frequently

Hypertherm recommends these steps when you have one of these cutting problems.

### The pilot arc starts but does not transfer to the workpiece.

- Make sure that the work cable is correctly connected to the cutting table and is fully tightened.
- Lower the torch so that it is closer to the workpiece.
- Make sure that the system is not in a fault condition.

  Refer to Diagnostic codes on page 278.

### The plasma arc does not cut completely through the workpiece, and there is too much sparking on top of the workpiece.

- Increase the arc current.

  Refer to the *XPR Cut Charts Instruction Manual (809830)*.

- Decrease the cut speed.

  Refer to the *XPR Cut Charts Instruction Manual (809830)*.

- Replace consumables that are worn or have damage.
- Cut thinner material.

### There is dross on the bottom of the cut.

- Adjust the cutting speed to align with the type and thickness of the metal being cut.

  Refer to the *XPR Cut Charts Instruction Manual (809830)*.

- Increase the arc current.

  Refer to the *XPR Cut Charts Instruction Manual (809830)*.

- Replace consumables that are worn or have damage.

### The angle of the cut is not square.

- Make sure that the direction of the torch travel is correct.

  The high-quality side of the cut is on the right with regard to the forward motion of the torch.

- Make sure that the following settings are correct:

  - Torch height
  - Cut speed
  - Arc current

  For the recommended settings for the type and thickness of the metal that you are cutting, refer to the *XPR Cut Charts Instruction Manual (809830)*.

- Make sure that the torch head is perpendicular to the workpiece.
- Replace consumables that are worn or have damage.

## Do a gas leak test

Do an automated gas leak test on the CNC screen or XPR web interface if you suspect a cutting system gas leak.

## ⚠ WARNING

**HYDROGEN GAS CAN CAUSE AN EXPLOSION OR FIRE**

Hydrogen is a flammable gas that can cause an explosion or fire if it is not removed.

Keep flames away from cylinders and hoses that contain hydrogen. Keep flames and sparks away from the torch when using hydrogen as a plasma gas.

Consult your local safety, fire, and building code requirements for the storage and use of hydrogen.

Hypertherm recommends that you install an exhaust ventilation system to remove the hydrogen-enriched atmosphere that can collect when hydrogen is used as the plasma gas for cutting.

Flashback arrestors are REQUIRED to stop the spread of fire to the supply gases (unless a flashback arrestor is not available for a specific gas or pressure).

As an installer or user, you must supply the exhaust ventilation and flashback arrestors for your cutting system. You can get them from your cutting machine supplier.

## ⚠ WARNING

**OXYGEN GAS CAN CAUSE A FIRE HAZARD**

If you use oxygen as the plasma gas for cutting, it can cause a potential fire hazard due to the oxygen-enriched atmosphere that collects. A fire can occur if oxygen is not removed.

Hypertherm recommends that you install an exhaust ventilation system to remove the oxygen-enriched atmosphere that can collect when oxygen is used as the plasma gas for cutting.

Flashback arrestors are REQUIRED to stop the spread of fire to the supply gases (unless a flashback arrestor is not available for a specific gas or pressure).

As an installer or user, you must supply the exhaust ventilation and flashback arrestors for your cutting system. You can get them from your cutting machine supplier.

You can do a gas leak test with all gas connect consoles, including Core and CorePlus.

Refer to Process-gas requirements for all gas connect consoles on page 48 for the recommended pressure and flow rates.

1. Use the CNC screen or XPR web interface to select the command to do an automated gas leak test.

   The error log shows the test results.

   The instruction manual that came with your CNC has information to help you do this step.

2. Refer to the error log for information about how to find or troubleshoot a possible gas leak.

## Example

### Gas leak tests in the XPR web interface

When you select **GAS LEAK TEST** in the XPR web interface:

1 The **GAS LEAK TEST** button is highlighted with red to show that it is active and the test has started.

2 The active valves are identified with colored highlights.

3 The gases shown on Line A, Line B, and shield are different for different process IDs. You can do a gas leak test for Line A (black) and for Line B (yellow) but not for the shield gas line (blue).

4 The gases flow until you select the same button or select another button that interrupts the test.

**Figure 67 -** GAS LEAK TEST in the XPR web interface

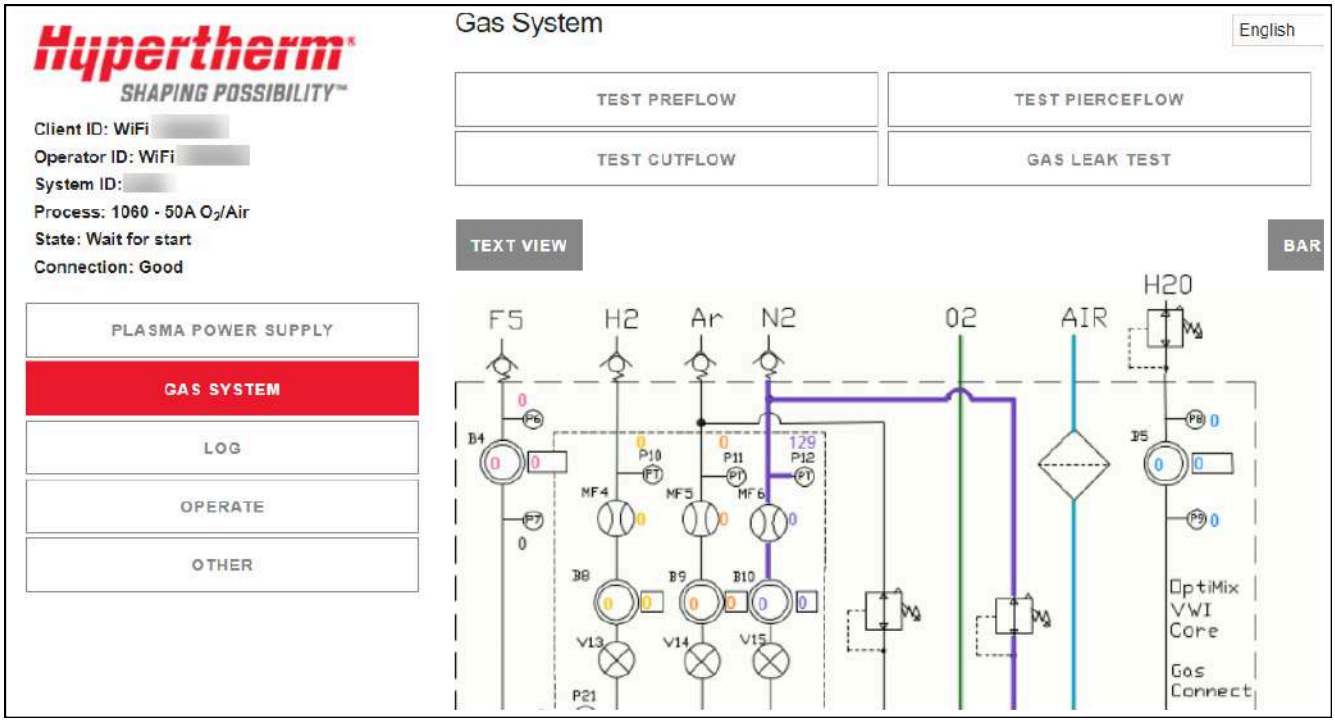

What to do next:

- After you complete a gas leak test in the XPR web interface, select the **LOG** button to see the result of the test.
- The **Log** screen shows if the test was successful.
- For a test that was not successful, look for information on the **Log** screen that identifies the point of failure.
- Use the wiring diagrams for your system to find where the gas leak is, using the information from the **Log** screen.

## Coolant flow measurements

There are two methods to measure coolant flow. You can use the CNC or XPR web interface, or you can do a container test.

It is necessary for power to be supplied to the cutting system to measure coolant flow. **Use extreme caution if you do diagnosis or maintenance tasks when the system components are connected to electric power.**

**WARNING**

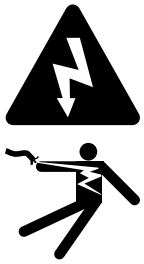

**ELECTRIC SHOCK CAN KILL**

The plasma power supply contains dangerous electric voltages that can seriously injure or kill you. Even if the plasma power supply is turned OFF, you can still get a serious electric shock if the plasma power supply remains connected to an electric power source.

Use extreme caution if you do diagnosis or maintenance tasks when the plasma power supply remains connected to an electric power source and the outer cover or panels are removed.

### Use the CNC or XPR web interface to measure coolant flow

If the coolant flow rate is outside of the correct range, an internal obstruction or leak can be the cause.

1. Look at the CNC or XPR web interface to identify the coolant flow rate.
2. Make sure that the coolant flow rate is more than the minimum flow rate limit for your system.

| Minimum flow rate limits | | Frequency (Hz) |
|---|---|---|
| Liters per minute (L/min) | U.S. gallons per minute (gal/min) | |
| 1.89 L/min | 0.5 gal/min | 15 Hz |
| 3.78 L/min | 1.0 gal/min | 33 Hz |
| 5.67 L/min | 1.5 gal/min | 51 Hz |

## Do a container test to measure coolant flow

The container test helps to find problems with slow coolant flow.

1. Get an empty container that has a minimum capacity of 3.79 liters (1 U.S. gallon) and volume measurements, if possible.
2. Remove the power from the cutting system.
3. At the rear of the cooler, disconnect the red coolant return hose that goes to the plasma power supply from the red coolant return fitting that is on the coolant hose manifold.

   Use the container to collect coolant leaks if necessary. Remove the coolant from the container before you start the test.

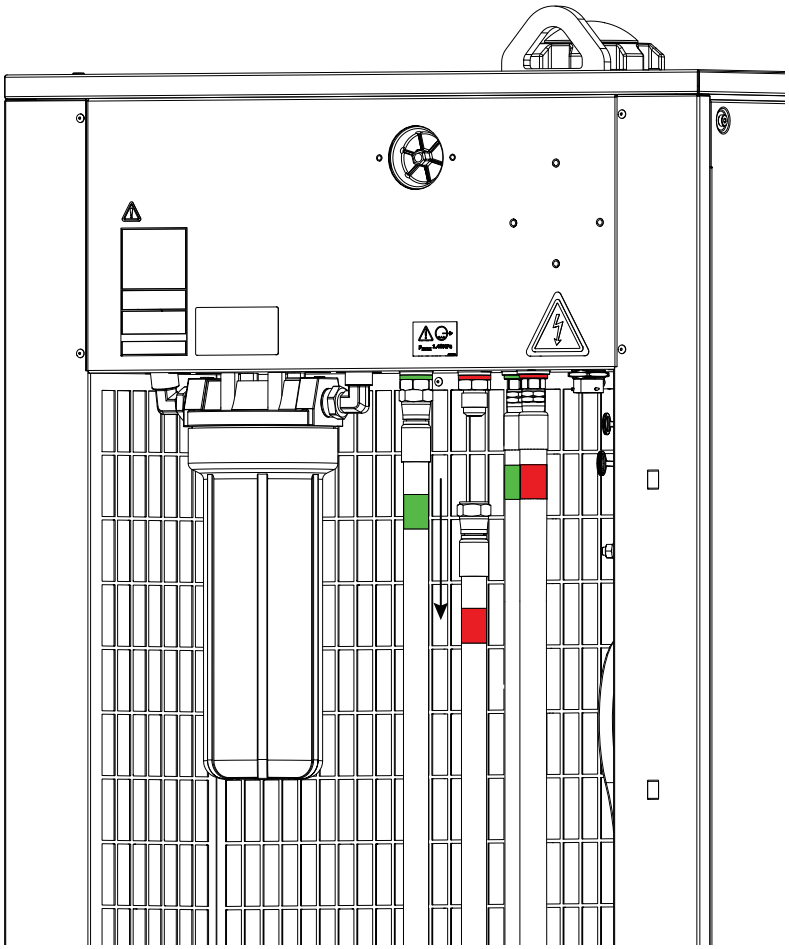

4. Put the end of the coolant return hose into the container.
5. Supply power to the cutting system.
6. Send a process to the cutting system.
7. When you hear the coolant pump start, let the coolant flow into the container for 30 seconds.
8. After 30 seconds, look at the quantity of coolant in the container.

   Make sure that the container has a minimum of 1.89 liters (0.5 U.S. gallon) of coolant.
9. If the flow rate is outside of the correct range, an internal obstruction or leak can be the cause.
10. If you find obstructions, remove them.
11. If you find parts that have damage, replace them.
12. If coolant flow stays slow, and it has been more than six months since the last coolant replacement, replace the coolant.

    Refer to Coolant replacement and its significance on page 263.

Hypertherm recommends coolant replacement every six months. For complete preventive maintenance information, refer to the *XPR Preventive Maintenance Program (PMP) Instruction Manual (809490)*.

13. If coolant flow stays slow after replacement, make sure that the bypass is operating correctly and that these components are good:
    - ☐ Coolant pump motor
    - ☐ Consumables and torch
    - ☐ Coolant check valve
14. If you cannot find or correct the problem, speak to your cutting machine supplier or regional Hypertherm Technical Service team.

## Do a test for continuity between the nozzle and workpiece

This test helps to find faulty connections or damage in the pilot-arc circuit. This test will do a check of the pilot-arc cable in the torch lead but not of the conductivity of the nozzle.

### Safety consideration for the XPR460

For this procedure, make sure that you use the pilot-arc relay, NOT the cooler-power relay. When at least one remote on-off switch is set to OFF (disabled), 220 VAC electric power stays ON (active) to the input side of the cooler-power relay.

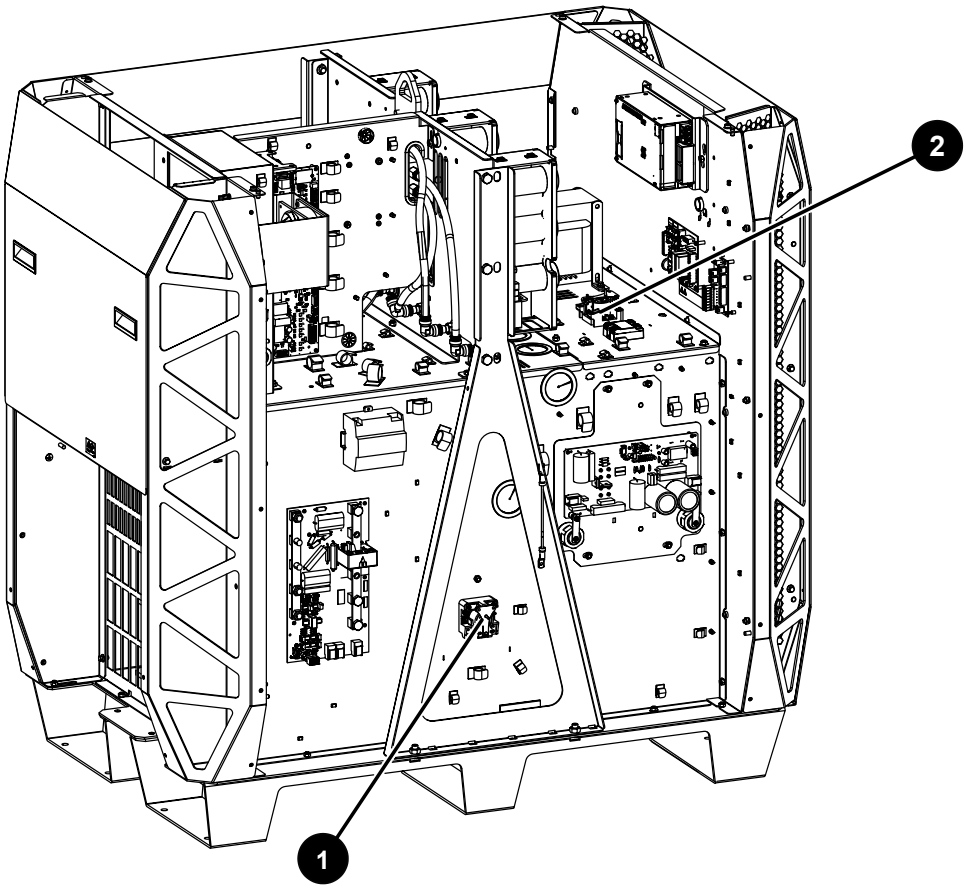


**1** Pilot-arc relay

**2** Cooler-power relay

## Corrective action

1. Remove the power from the cutting system.
2. Locate the start-circuit assembly (PCB 4 in the plasma power supply).

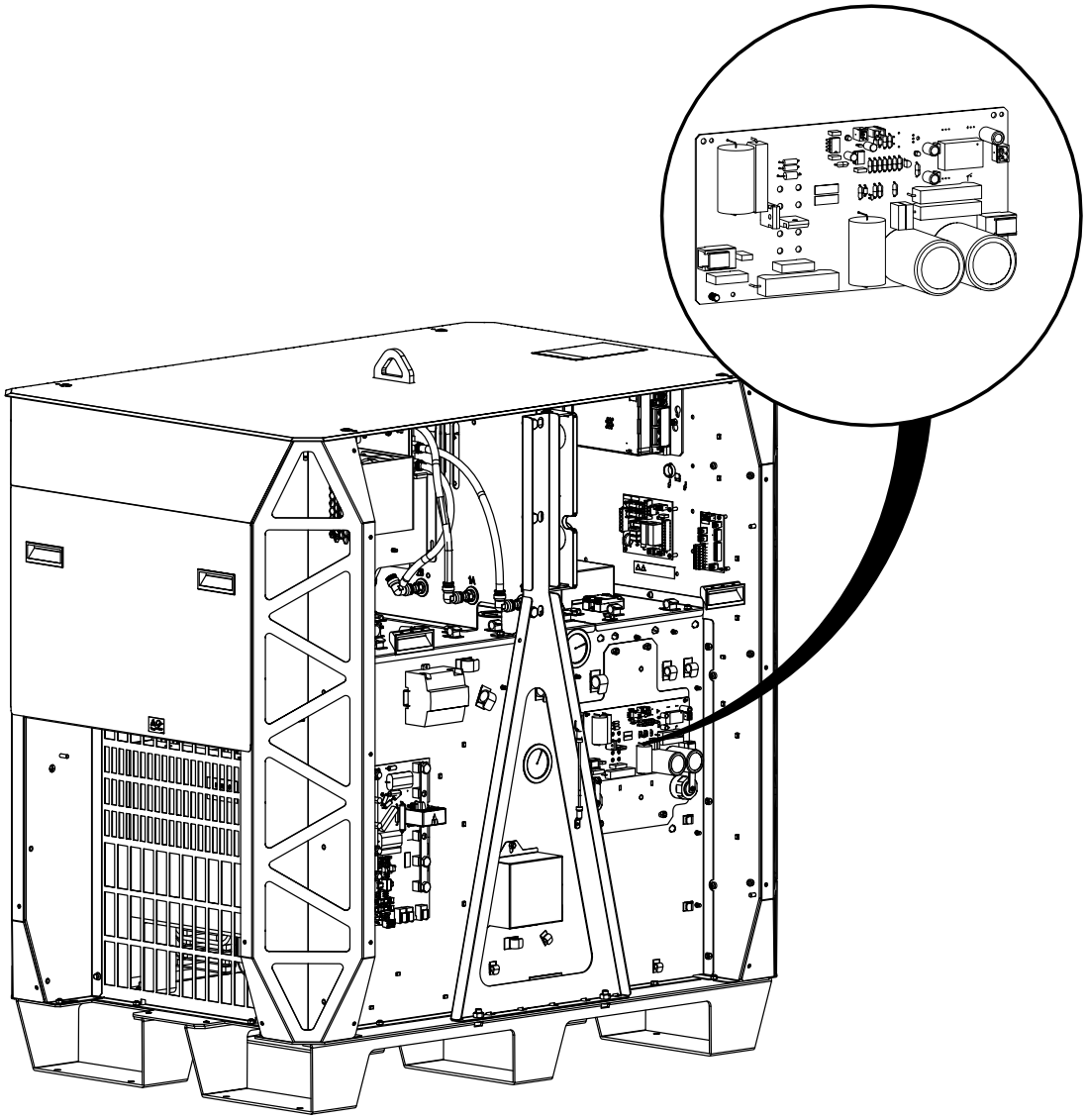

3. Install a temporary jumper wire between J5 (nozzle) and J1 (work) on the start circuit PCB (PCB 4 in the plasma power supply).

   If you do not have a jumper wire, you can put plugs in the J7 and J8 connectors instead.

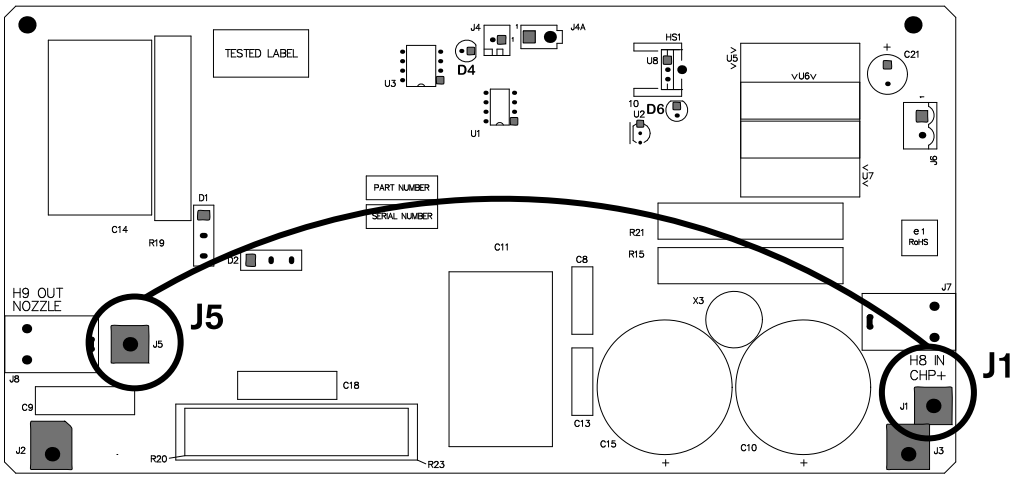


4. Find the pilot-arc relay (CR 1), and remove the dust cover.

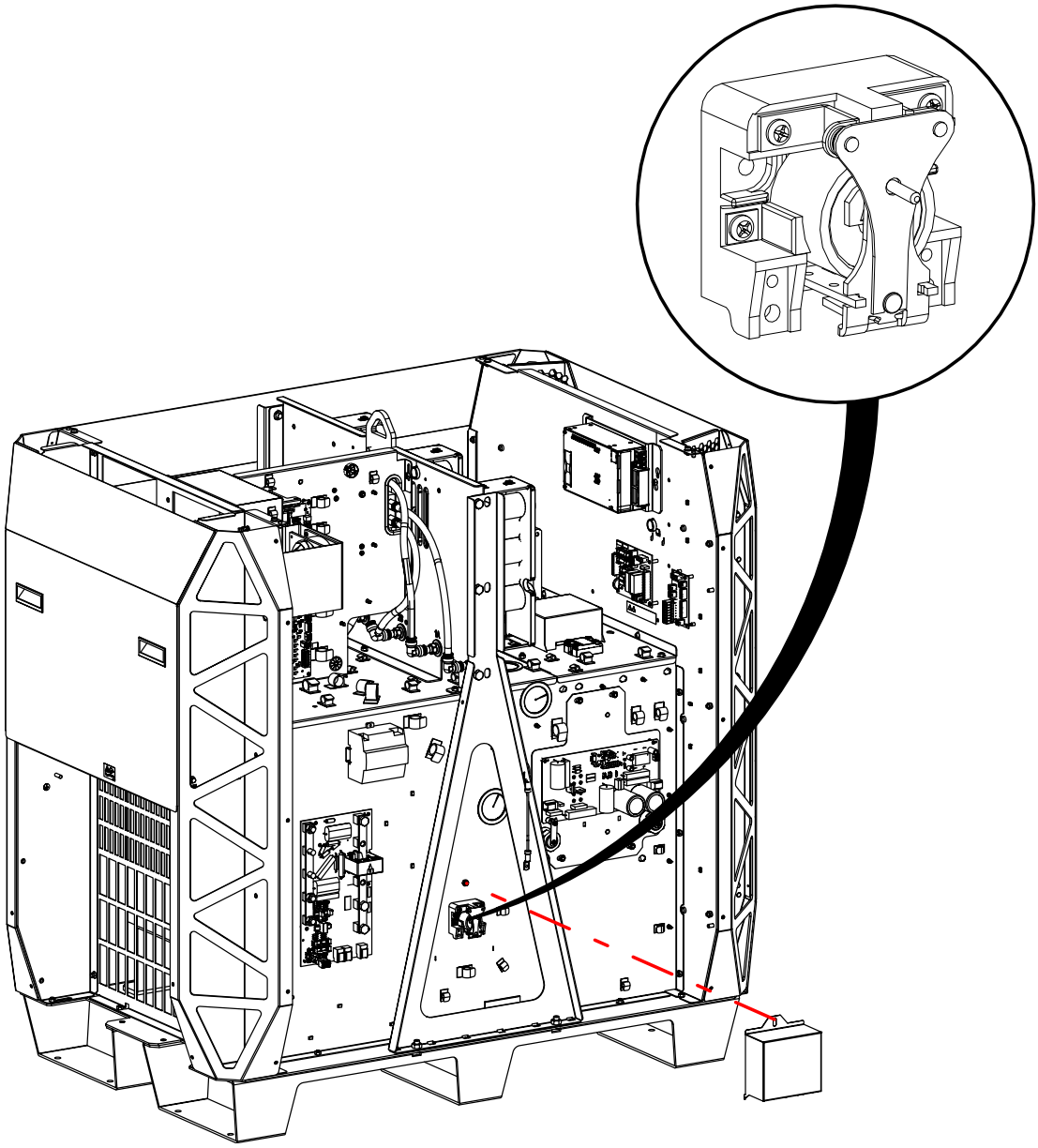

5. Have a second person close (push in) the contact on the pilot arc relay.

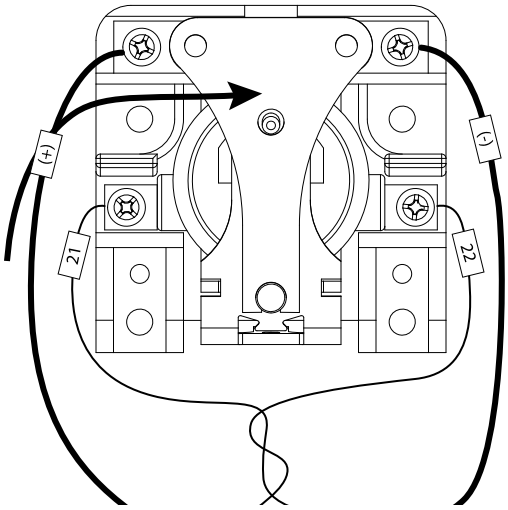


6. Measure the ohms (Ω) between the nozzle and the workpiece.

   Less than 3 ohms (Ω) is good. A value more than 3 ohms (Ω) identifies a faulty connection between one of the following:

   - ☐ The torch and the ignition console
   - ☐ The ignition console and the plasma power supply
   - ☐ The plasma power supply work cable and the workpiece

7. Examine the work cable, and replace the cable if you find damage or excess wear.

8. Examine the pilot-arc circuit between these connection points:

   - ☐ From the plasma power supply to the gas connect console
   - ☐ From the gas connect console to the TorchConnect console
   - ☐ From the TorchConnect console to the torch receptacle

9. Does the pilot-arc circuit have damage?

| | |
|---|---|
| If yes... | Replace the pilot-arc cables that have damage. |
| If no... | Replace the torch and torch receptacle. |

10. Release the pilot-arc relay, and measure the ohms (Ω) between the nozzle and workpiece.

    The acceptable range is 9,000 ohms (Ω) – 11,000 ohms (Ω). If the ohms (Ω) value is low – approximately 5,000 ohms (Ω) or less – examine the pilot-arc circuit between these connection points. Look for insulation damage and short circuits to ground:

    - ☐ From the plasma power supply to the gas connect console
    - ☐ From the gas connect console to the TorchConnect console
    - ☐ From the TorchConnect console to the torch receptacle

# Measure resistance from thermistors

Use this procedure to measure the resistance of each thermistor wire.

1. Use a digital multimeter to measure the resistance from each thermistor wire, using these connector-pin locations:

| Thermistor location | Location of thermistor wires/connector | 1st connector pin | 2nd connector pin |
|---|---|---|---|
| Inductor 1A | PCB 1 (plasma power supply) | J1.4 pin 3 | J1.4 pin 4 |
| Inductor 1B | PCB 1 (plasma power supply) | J1.4 pin 5 | J1.4 pin 6 |
| Inductor 2A [1] | PCB 1 (plasma power supply) | J1.4 pin 7 | J1.4 pin 8 |
| Inductor 2B [1] | PCB 1 (plasma power supply) | J1.2 pin 1 | J1.2 pin 2 |
| Inductor 3A [2] | PCB 1 (plasma power supply) | J1.2 pin 3 | J1.2 pin 4 |
| Inductor 3B [2] | PCB 1 (plasma power supply) | J1.2 pin 5 | J1.2 pin 6 |
| Transformer 1 | PCB 1 (plasma power supply) | J1.4 pin 1 | J1.4 pin 2 |
| Transformer 2 [2] | PCB 1 (plasma power supply) | J1.25 pin 1 | J1.25 pin 2 |
| Control transformer [2] | PCB 1 (plasma power supply) | J1.25 pin 3 | J1.25 pin 4 |
| Chopper 1 | PCB 2 (plasma power supply) | J2.2 pin 1 | J2.2 pin 3 |
| Chopper 2 [1] | PCB 3 (plasma power supply) | J3.2 pin 1 | J3.2 pin 3 |
| Chopper 3 [2] | PCB 8 (plasma power supply) | J4.2 pin 1 | J4.2 pin 3 |
| Coolant temperature [3] | PCB 1 (plasma power supply) | J1.2 pin 7 | J1.2 pin 8 |
| Coolant temperature [2] | PCB 2 (cooler) | J2.4 pin 1 | J2.4 pin 2 |

1 XPR300 and XPR460 only

2 XPR460 only

3 XPR170 and XPR300 only

2. Look for a resistance value that is outside of the minimum or maximum value in Ohmic resistance values for thermistors on page 334.

   At approximately 25°C (77°F), look for a resistance of approximately 10,000 ohms (Ω).

| If you get this condition... | Do these steps... |
|---|---|
| The resistance is more than the maximum value. | Speak to your cutting machine supplier or regional Hypertherm Technical Service team. They can help you to identify if there is a wiring fault or if thermistor replacement is necessary. |

| If you get this condition... | Do these steps... |
|---|---|
| The resistance is at or near 0 ohms (Ω). | 1. Examine the wiring between each thermistor and its connector pins.<br>2. Look for shorts between wires or to the ground. |
| The resistance is in the permitted range. | Continue cutting system operation. |
| The resistance stays at less than the minimum ohmic value or does not change after the coolant gets to:<br>▪ ≤ 85°C (185°F) for XPR170 and XPR300<br>▪ ≤ 75°C (167°F) for XPR460 | Speak to your cutting machine supplier or regional Hypertherm Technical Service team. |
| The thermistor resistance is in the permitted range when the thermistor is disconnected from the control PCB, and the code continues when the thermistor is reconnected to the control PCB. | Speak to your cutting machine supplier or regional Hypertherm Technical Service team. They can help you make a decision on if control PCB replacement is necessary. Refer to Plasma power supply control PCB (141545) diagram on page 382. |

3. If you cannot find or correct the problem, speak to your cutting machine supplier or regional Hypertherm Technical Service team.

## Do an ohmic-contact test

Use this test to examine the resistance from the torch tip to the ohmic relay in the plasma cutting system. This test helps to find ohmic contact issues.

1. Remove the power from the cutting system.
2. Remove the top panel and the side panels from the TorchConnect console.
3. Examine the J2 connector on the ohmic contact PCB.

   Make sure that the ohmic-relay coil is connected. Reconnect or tighten the ohmic-relay coil if necessary.
4. Disconnect the ohmic-relay connector to get access to the bullet connector on the torch receptacle block-side inside of the TorchConnect console.

   To disconnect the ohmic-relay connector, unscrew and unplug it.

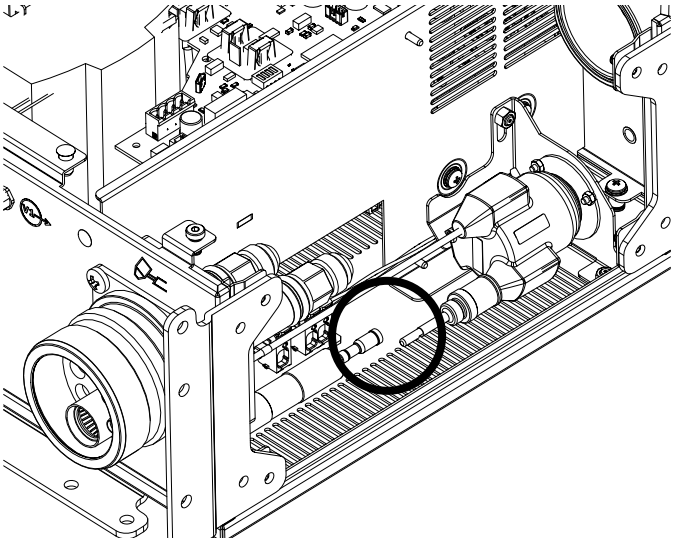

5. Use a digital multimeter to measure the resistance from the torch tip to the ohmic relay.

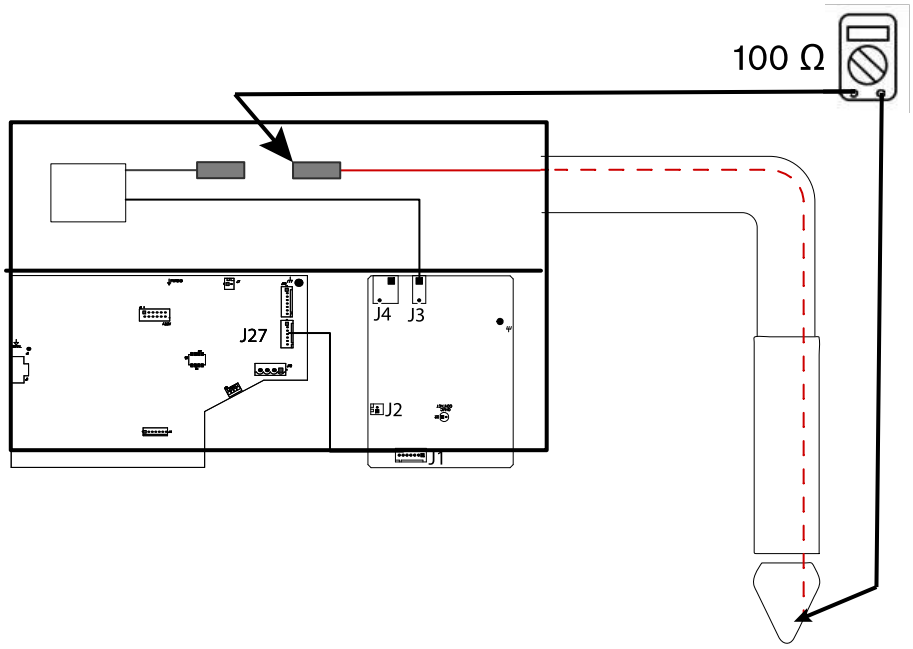


   a. If the resistance is infinite (open), replace the torch lead.

   b. If the resistance is less than 100 ohms (Ω), continue with the next step.

6. Reconnect the ohmic-relay connector.

7. Examine the ohmic contact PCB.

   Refer to Torch connect console ohmic PCB (141368) diagram on page 389.

   a. If the PCB configuration is for internal ohmic, make sure that the ohmic wire from the ohmic relay is connected to J3.

b. If the PCB configuration is for external ohmic, make sure that the ohmic wire from the ohmic relay is connected to J4 pin 2 and that the ohmic wire from the lifter is connected to J4 pin 1.

c. Adjust or tighten connections, if necessary, and continue with the next step.

8. Supply power to the cutting system.
9. Make sure that the torch does **not** touch the workpiece.
10. Use a digital multimeter to look for 24 VDC between the workpiece, or chassis ground, and the torch tip (J3 or J4).
11. If there is no 24 VDC, examine the wiring to the ohmic PCB.

    a. Make sure that the J3 or J4 connector is not clamped onto the wire insulation.

    b. Make sure that the connection between the J2 or J2A connector and the relay coil is good.

    c. Replace the relay if necessary.

    d. If the connections are good but there is no 24 VDC, speak to your cutting machine supplier or regional Hypertherm Technical Service team.

12. If you find 24 VDC, continue with these steps:

    a. Make sure that both the workpiece and the TorchConnect console are grounded in the same location.

    b. Touch the torch tip to the workpiece, or attach a jumper wire between the torch tip and the chassis ground.

    c. Examine the D2 LED on the ohmic contact PCB.

    Refer to Torch connect console ohmic PCB (141368) diagram on page 389.

    d. Examine the D15 LED on the control PCB.

    Refer to Torch connect console control PCB (141334) diagram on page 389.

    e. Make sure that D2 and D15 both illuminate.

    f. If D2 and D15 both illuminate, make sure that the CNC can receive ohmic contact signals from the cutting system or Torch Height Control (THC).

    If the CNC can receive ohmic contact signals, refer to the instruction manual for your CNC for troubleshooting recommendations.

    g. If D2 is not illuminated, replace the ohmic contact PCB.

    h. If D2 (on the ohmic contact PCB) is illuminated and D15 (on the control PCB) is not illuminated, examine the PCB wiring harnesses for loose wiring.

13. If you cannot find or correct the problem, speak to your cutting machine supplier or regional Hypertherm Technical Service team.

# Troubleshooting procedures for diagnostic codes

## CAN communication troubleshooting for gas connect consoles

### Diagnostic codes 500, 507, 508, 510, 602

Do these steps if you get a diagnostic code that is related to CAN communication issues with a Core, CorePlus, VWI, or OptiMix gas connect console.

Multiple CAN diagnostic codes at the same time can identify a problem with the CAN cable. If there is only one code, the problem is more likely to be caused by what the code says and not by the CAN cable.

### Symptoms

| Code | Symptoms | XPR models | XPR action | Code cancels with... |
|---|---|---|---|---|
| **500** | The gas connect console (Core, CorePlus, VWI, or OptiMix) cannot receive communications (at least once-per-second) from the main control PCB through the CAN. | All models | Shut down | Remote on-off |
| **507** | There is a problem with the CAN when power is supplied to the cutting system. | All models | None | Remote on-off |
| **508** | The load on the CAN bus is more than capacity for 10 milliseconds or more. | All models | None | Remote on-off |
| **510** | The main control PCB cannot receive communications (at least once-per-second) from the gas connect console (Core, CorePlus, VWI, or OptiMix) through the CAN. | All models | Ramp down | Remote on-off |
| **602** | For a minimum of 30 seconds after power is supplied to the cutting system, the gas connect console (Core, CorePlus, VWI, or, OptiMix) does not identify itself to the main control PCB. | All models | Shut down | Remote on-off |

### Corrective action

1. Remove the power from the cutting system.

2. Tighten loose CAN cable connections between the plasma power supply, the cooler, and the gas connect console.
3. Tighten loose connections on the control PCB chassis in the gas connect console.
4. Make sure that the D16 (+5 VDC) LED and the D18 (+3.3 VDC) LED are illuminated on the control PCB.

   D16 and D18 show that there is power to the PCB. Refer to Gas connect console control PCB (141375) diagram on page 387.
5. Make sure that the D30 LED and the D31 LED on the control PCB are flashing one time per second.

   A flashing LED shows that the mircoprocessor on the PCB is functional.
6. If the D24 LED and the D25 LED on the control PCB are flickering and you have diagnostic codes 600 and 602, do the following:
   a. Make sure that the CAN cables between the plasma power supply and the cooler and between the cooler and the gas connect console are connected.
   b. Disconnect the CAN cable between the gas connect console and the TorchConnect console.

| If you see this condition... | Do these steps... |
|---|---|
| D24 and D25 stop flickering when you disconnect the CAN cable. | 1. There is a bad connection between the plasma power supply and the cooler or between the cooler and the gas connect console. Reconnect the CAN cable, or replace it if necessary.<br>2. There is a bad connection between the small CAN jumper cable for the gas connect console control PCB and the sheet metal panel in the gas connect console. Reconnect the CAN cable, or replace it if necessary. |
| The control PCB in the gas connect console is operating correctly but you continue to see the same diagnostic code. | There is a problem with one of the following cables. Continue with the next step.<br>▪ The CAN cable between the gas connect console and the TorchConnect console<br>▪ The small CAN jumper cable between the control PCB and the sheet metal panel in the gas connect console |

7. Disconnect these cables and examine them for sockets and pins that are bent:
   a. If you find bent pins, make the bent pins straight.
   b. If you find bent sockets or broken pins, get a new cable.
8. Examine D24 and D25 on the control PCB again:

| If you see this condition... | Do these steps... |
|---|---|
| D24 and D25 are not illuminated and are not flickering. | Reconnect the CAN cables to the plasma power supply and the cooler. |
| D24 is not illuminated, and D25 is flickering. | 1. Examine the control PCB in the gas connect console for shorts.<br>2. Look for a shorting block across pin 1 and pin 2 of J16.<br>3. If there is a shorting block, remove it and start the cutting system again.<br>4. If J16 is open, replace the control PCB. |

9. If you cannot find or correct the problem, speak to your cutting machine supplier or regional Hypertherm Technical Service team.

# CAN communication troubleshooting for mixing modules in OptiMix consoles

## Diagnostic codes 501, 507, 508, 511

Do these steps if you get a diagnostic code that is related to CAN communication issues with the mixing module in an OptiMix gas connect console.

Multiple CAN diagnostic codes at the same time can identify a problem with the CAN cable. If there is only one code, the problem is more likely to be caused by what the code says and not by the CAN cable.

## Symptoms

| Code | Symptoms | XPR models | XPR action | Code cancels with... |
|---|---|---|---|---|
| **501** | The OptiMix gas connect console cannot receive communications (at least once-per-second) from the main control PCB through the CAN. | All models | Shut down | Remote on-off |
| **507** | There is a problem with the CAN when power is supplied to the cutting system. | All models | None | Remote on-off |
| **508** | The load on the CAN bus is more than capacity for 10 milliseconds or more. | All models | None | Remote on-off |
| **511** | The main control PCB cannot receive communications (at least once-per-second) from the gas connect console's mix module through the CAN. | All models | Ramp down | Remote on-off |

## Corrective action

1. Remove the power from the cutting system.
2. Tighten loose CAN cable connections between the plasma power supply, the cooler, and the gas connect console.
3. Tighten loose connections on the control PCB chassis in the gas connect console.
4. Make sure that the D16 (+5 VDC) LED and the D18 (+3.3 VDC) LED are illuminated on the control PCB.

   D16 and D18 show that there is power to the PCB. Refer to Gas connect console control PCB (141375) diagram on page 387.
5. Make sure that the D30 LED and the D31 LED on the control PCB are flashing one time per second.

   A flashing LED shows that the mircoprocessor on the PCB is functional.
6. If the D24 LED and the D25 LED on the control PCB are flickering and you have diagnostic codes 600 and 602, do the following:
   a. Make sure that the CAN cables between the plasma power supply and the cooler and between the cooler and the gas connect console are connected.
   b. Disconnect the CAN cable between the control PCB and the mixer in the OptiMix console.
   c. With the cable disconnected, do D24 and D25 stop flickering?

| | |
|---|---|
| If yes... | ▪ There is damage to the CAN cable. Use an ohm meter to make sure that there is continuity at each connector. Measure each pin in the same order as the CAN connectors. For example, in the image, pin 1 in connector A aligns with pin 1 in connector B. If there is no continuity, replace the cable.<br> <br><br>▪ There is a bad connection between the plasma power supply and the cooler or between the cooler and the gas connect console. Reconnect the CAN cable, or replace it if necessary.<br>▪ There is a bad connection between the small CAN jumper cable for the gas connect console control PCB and the sheet metal panel in the gas connect console. Reconnect the CAN cable, or replace it if necessary. |
| If no... | Continue with the next step. |

7. If the control PCB in the gas connect console is operating correctly but you continue to see the same diagnostic code, do the following:
   a. Replace the CAN cable between the control PCB and the mixer.
   b. Disconnect the CAN cable between the gas connect console and the TorchConnect console.
   c. With the cable disconnected, do a check for the following:
      - Make sure that each green LED on the mixer is operating correctly.
      - Make sure that the XPR web interface or the CNC screen shows that the cutting system is equipped with an OptiMix gas connect console.
8. Examine D24 and D25 on the control PCB again:

| If you see this condition... | Do these steps... |
|---|---|
| D24 and D25 are not illuminated and are not flickering. | Reconnect the CAN cables to the plasma power supply and the cooler. |
| D24 is not illuminated, and D25 is flickering. | 1. Examine the control PCB in the gas connect console for shorts.<br>2. Look for a shorting block across pin 1 and pin 2 of J16.<br>3. If there is a shorting block, remove it and start the cutting system again. |

9. Examine the green LED on the mixer PCB in the OptiMix console:

| If you see this condition... | Do these steps... |
|---|---|
| The green LED is flashing one time per second, and the yellow LED is flickering. | No action is necessary. This is the correct operation. The cutting system is ready for use. |
| The green LED is flashing one time per second, and the yellow LED is not illuminated. | 1. Examine the CAN cable between the control PCB and the mixer.<br>2. Look for pins that are bent or broken.<br>3. Make sure that all connections are fully tightened. |
| The green LED is blinking one time per second, and the red LED is illuminated and not flickering. | There is a possible problem with the mixer in the OptiMix console. Speak to your cutting machine supplier or regional Hypertherm Technical Service team. |

On the mixer PCB, look for a green LED, a yellow LED, and a red LED that are aligned in a row.

10. If you cannot find or correct the problem, speak to your cutting machine supplier or regional Hypertherm Technical Service team.

# CAN communication troubleshooting for TorchConnect consoles

## Diagnostic codes 503, 507, 508, 513, 600

Do these steps if you get a diagnostic code that is related to CAN communication issues with a TorchConnect console.

Multiple CAN diagnostic codes at the same time can identify a problem with the CAN cable. If there is only one code, the problem is more likely to be caused by what the code says and not by the CAN cable.

## Symptoms

| Code | Symptoms | XPR models | XPR action | Code cancels with... |
|---|---|---|---|---|
| **503** | The TorchConnect console cannot receive communications (at least once-per-second) from the main control PCB through the CAN. | All models | Shut down | Remote on-off |
| **507** | There is a problem with the CAN when power is supplied to the cutting system. | All models | None | Remote on-off |
| **508** | The load on the CAN bus is more than capacity for 10 milliseconds or more. | All models | None | Remote on-off |
| **513** | The main control PCB cannot receive communications (at least once-per-second) from the TorchConnect console through the CAN. | All models | Ramp down | Remote on-off |
| **600** | For a minimum of 30 seconds after power is supplied to the cutting system, the TorchConnect console does not identify itself to the main control PCB through the CAN. | All models | Shut down | Remote on-off |

## Corrective action

1. Remove the power from the cutting system.
2. Make sure that all connections between the TorchConnect console and the gas connect console are fully tightened.
3. Make sure that the D43 (+5 VDC) LED and the D46 (+3.3 VDC) LED are illuminated on the control PCB (141334) in the TorchConnect console.
4. Examine D43 (+5 VDC) and D46 (+3.3 VDC) on the control PCB:

| If you see this condition... | Do these steps... |
|---|---|
| D43 and D46 are not illuminated. | 1. Measure the power output for PS1 with a digital volt meter.<br>2. If there is no 24 VDC output, examine the 120 VAC input to PS1.<br>3. If there is no 120 VAC, make sure that the power cable connection is fully tightened between the TorchConnect console and the 120 VAC-out connection from the gas connect console. |
| D43 and D46 are illuminated. | 1. Make sure that the 120 VAC-out cable from the gas connect console is fully tightened.<br>2. Make sure that the Activity LED (D88) and the Status LED (D87) are flashing one time per second.<br>3. If D88 and D87 are not flashing one time per second, replace the control PCB. For assistance, speak to your cutting machine supplier or regional Hypertherm Technical Service team. |

A flashing or flickering LED shows that the microprocessor on the control PCB is functional. If D43 and D46 are good, continue with the next step.

5. Examine the CAN TX LED (D35) and the RX LED (D34):

| If you see this condition... | Do these steps... |
|---|---|
| D34 is not flickering. | Reconnect the CAN cable between the TorchConnect console and the gas connect console. Fully tighten the connections. |
| D34 is flickering, but D35 is not flickering. | Replace the control PCB in the TorchConnect console. For assistance, speak to your cutting machine supplier or regional Hypertherm Technical Service team. |

6. If you cannot find or correct the problem, speak to your cutting machine supplier or regional Hypertherm Technical Service team.

# CAN communication troubleshooting for choppers

## Diagnostic codes 504 – 508, 514 – 516, 601, 604, 606

Do these steps if you get a diagnostic code that is related to CAN communication issues with a chopper.

Multiple CAN diagnostic codes at the same time can identify a problem with the CAN cable. If there is only one code, the problem is more likely to be caused by what the code says and not by the CAN cable.

## Symptoms

| Code | Symptoms | XPR models | XPR action | Code cancels with... |
|---|---|---|---|---|
| **504** | Chopper 1 cannot receive communications (at least once-per-second) from the main control PCB through the CAN. | All models | Shut down | Remote on-off |
| **505** | Chopper 2 cannot receive communications (at least once-per-second) from the main control PCB through the CAN. | XPR300, XPR460 | Shut down | Remote on-off |
| **506** | Chopper 3 cannot receive communications (at least once-per-second) from the main control PCB through the CAN. | XPR460 | Shut down | Remote on-off |
| **507** | There is a problem with the CAN when power is supplied to the cutting system. | All models | None | Remote on-off |
| **508** | The load on the CAN bus is more than capacity for 10 milliseconds or more. | All models | None | Remote on-off |
| **514** | The main control PCB cannot receive communications (at least once-per-second) from Chopper 1 through the CAN. | All models | None | Remote on-off |
| **515** | The main control PCB cannot receive communications (at least once-per-second) from Chopper 2 through the CAN. | XPR300, XPR460 | None | Remote on-off |
| **516** | The main control PCB cannot receive communications (at least once-per-second) from Chopper 3 through the CAN. | XPR460 | None | Remote on-off |
| **601** | For a minimum of 30 seconds after power is supplied to the cutting system, Chopper 1 does not identify itself to the main control PCB through the CAN. | All models | Shut down | Remote on-off |
| **604** | The inductor thermocouples for Chopper 2 were sensed, but Chopper 2 was not sensed. | XPR300, XPR460 | None | ▪ Start process<br>▪ Set process<br>▪ Remote on-off |
| **606** | The main control does not receive CAN communications from Chopper 3 after power is supplied to the cutting system. | XPR460 | None | ▪ Start process<br>▪ Set process<br>▪ Remote on-off |

## Corrective action

1. Remove the power from the cutting system.

2. Make sure that the chopper ID cable connector is fully engaged in J8 on each chopper in the plasma power supply.
3. Examine the CAN cable connections:

| If you see this condition... | Do these steps... |
|---|---|
| You only have diagnostic code 504. | Examine the CAN cable connections between Chopper 1 and Chopper 2 in the plasma power supply:<br>1. Make sure that all cable connections are fully tightened.<br>2. If you find bent pins, make the bent pins straight.<br>3. If you find bent sockets or broken pins, get a new cable. |
| You have diagnostic codes 503 and 504 together (XPR300 and XPR460 only). | Examine the CAN cable connections between Chopper 2 and Chopper 3:<br>1. Make sure that all cable connections are fully tightened.<br>2. If you find bent pins, make the bent pins straight.<br>3. If you find bent sockets or broken pins, get a new cable. |
| You have diagnostic codes 504 and 505 together (XPR460 only). | Examine the CAN cable connection between Chopper 3 and the control PCB (PCB 1) on the plasma power supply:<br>1. Make sure that all cable connections are fully tightened.<br>2. If you find bent pins, make the bent pins straight.<br>3. If you find bent sockets or broken pins, get a new cable. |
| You have other diagnostic codes. | Continue with the next step. |

4. Make sure that the green LED is illuminated on Chopper 1/PCB 2, Chopper 2/PCB 3, and Chopper 3/PCB 8 for the following:
   - ☐ D22 (+18/-5 VDC)
   - ☐ D14 (+5 VDC)
   - ☐ D21 (+3.3 VDC)

   Each illuminated LED shows that there is power to that chopper control PCB (PCB 2, PCB 3, and PCB 8).
5. If at least one LED is not illuminated, do the following:

| If you see this condition... | Do these steps... |
|---|---|
| No LED is illuminated. | 1. Make sure that the J2 power connector is fully engaged.<br>2. Make sure that the wiring to the J2 connector is good.<br>3. Do a check for 24 VDC on J2 pin 1 and pin 3 for each chopper in the system.<br>4. If the wiring is good and you continue to get the same diagnostic code, speak to your cutting machine supplier or regional Hypertherm Technical Service team. |
| Each LED is illuminated except for one or two. | Replace the chopper control PCB if necessary. Speak to your cutting machine supplier or regional Hypertherm Technical Service team. |

6. If each green LED is illuminated, examine each chopper control PCB:
   a. Make sure that the D3 LED and D4 LED are flashing one time per second.

      A flashing LED shows that the microprocessor on the PCB is functional.
   b. Make sure that Dual Inline Package (DIP) switches 1 – 4 on S2 are in the OFF position.
   c. Make sure that the CAN cable connector is fully engaged in J7.
   d. If an LED is not operating correctly, speak to your cutting machine supplier or regional Hypertherm Technical Service team.
7. Make sure that the D33 LED and D34 LED are flickering.

   A flickering LED shows that communications on the CAN cable is functional.
8. If you cannot find or correct the problem, speak to your cutting machine supplier or regional Hypertherm Technical Service team.

# Troubleshooting for an ignition timeout

## Diagnostic code 520

A 520 diagnostic code is an alert that shows after an ignition timeout when there is no pilot arc.

## Symptoms

| Code | Symptoms | XPR models | XPR action | Code cancels with... |
|---|---|---|---|---|
| **520** | The sensor in Chopper 1 does not measure current during the 600 millisecond ignite period because no current path completes between the nozzle and the electrode. | All models | End of cycle | ▪ Start process<br>▪ Set process<br>▪ Remote on-off |

## Corrective action

1. Make sure that the transfer height is correct and that the torch is not in contact with the workpiece.
2. Examine the consumables, and replace any that have damage or excess wear.
3. Make sure that the spark gap PCB is correctly connected to the ignition PCB.

   Refer to Gas connect console high-voltage side parts on page 405.
   a. Make sure that the spark gaps illuminate brightly.
   b. If they do not, replace only the spark gap PCB.

4. Examine the main contactor:
   a. Look for black or rough surfaces that are difficult to remove.
   b. Make sure that the contactor closes immediately after the Start command is applied.
5. If the contactor is defective, replace it.
6. Examine the pilot-arc relay to make sure that it closes.
7. Examine the wiring to make sure that the coil receives 24 VDC.
8. Examine the start circuit PCB, and replace it if it is defective.
9. Do a torch lead test: Do a test for continuity between the nozzle and workpiece on page 301.

# Troubleshooting for a pilot arc timeout

## Diagnostic code 521

Diagnostic code 521 identifies a problem with the pilot arc.

## Symptoms

| Code | Symptoms | XPR models | XPR action | Code cancels with... |
|---|---|---|---|---|
| **521** | ▪ No current is found on the work cable for 500 milliseconds after the pilot arc current is established.<br>▪ For a minimum of 3 milliseconds, the sensor in the work cable cannot measure current greater than the transfer reference value. | All models | End of cycle | ▪ Start process<br>▪ Set process<br>▪ Remote on-off |

## Corrective action

1. Make sure that the transfer height is correct.
2. Examine the consumables.
3. Replace consumables that have damage or excess wear.

## Verification

Do a torch lead test. Refer to Do a test for continuity between the nozzle and workpiece on page 301.

# Troubleshooting for gas flow process timeouts

## Diagnostic codes 522 – 525

Diagnostic codes 522 – 525 identify a problem with the preflow, cutflow, or gas purge processes.

## Symptoms

| Code | Symptoms | XPR models | XPR action | Code cancels with... |
|---|---|---|---|---|
| **522** | The cutting system cannot complete the preflow routine in 30 seconds. | All models | End of cycle | ▪ Start process<br>▪ Set process<br>▪ Remote on-off |
| **523** | The preflow purge cannnot get to the setpoint in 45 seconds. | All models | None | ▪ Set process<br>▪ Remote on-off |
| **524** | The cutflow purge cannnot get to the setpoint in 45 seconds. | | | |
| **525** | The plasma cutting system cannot complete the $N_2$ purge in 45 seconds. The process did not get selected. | | | |

## Corrective action

1. Look at the diagnostic code history for gas-related codes.

   The code history can help to identify where to look for flow or pressure problems.

2. Examine the consumables, valves, and inlet hoses to make sure that they are correct.
3. Replace any consumables, valves, or inlet hoses that have damage or excess wear.

# Troubleshooting for low inlet gas pressure

## Diagnostic codes 530, 531, 533

Diagnostic codes 530, 531, and 533 identify low pressure with the inlet gas supply.

### Symptoms

| Code | Symptoms | XPR models | XPR action | Code cancels with... |
|---|---|---|---|---|
| **530** | ▪ The line A pressure (P5) is less than 75% of the setpoint for 200 milliseconds for any process.<br>▪ P5 is less than 75% of the P21 sensor reading for 4 seconds for a mixed-fuel gas process.<br>▪ P5 is less than 75% of the P7 setpoint for 4 seconds for an F5 process. | All models | Ramp down | ▪ Set process<br>▪ Remote on-off |
| **531** | For a minimum of 200 milliseconds, the line B pressure is less than 75% of setpoint. | | | |
| **533** | For a minimum of 200 milliseconds, the F5 pressure sensor (P7) is less than 75% of setpoint. | | | |

### Corrective action

1. Look at the diagnostic code history for pressure-related codes.

   The code history can help to identify where to look for flow or pressure problems.

2. Make sure that the inlet gas pressure for line A (P2) or line B (P1) is in the correct range.
3. If the measurement is too high or too low, use the regulators to adjust the pressure for the line A, line B, or F5 gas to the correct range.
4. Examine the consumables:
   a. Make sure that the correct consumables are installed.
   b. Make sure that there is no damage or excess wear.
5. Replace the incorrect consumables or the consumables that have damage or excess wear.

### Verification

Use the gas volume monitors that are near the pressure transducers to look for gas leaks.

## Troubleshooting for low shield water pressure

### Diagnostic code 532

Diagnostic code 532 identifies when the shield water pressure supplied to the cutting system is less than the required range. This condition can cause system shutdown or poor cut quality. Examination of water hoses, fittings, regulators, and possibly the use of a booster water pump can be necessary.

### Symptoms

| Code | Symptoms | XPR models | XPR action | Code cancels with... |
|---|---|---|---|---|
| **532** | For a minimum of 200 milliseconds, the shield water pressure (P9) is less than 50% of the setpoint (2.7 bar/39 psi), and the setpoint is more than 0. | All models | Ramp down | ▪ Set process<br>▪ Remote on-off |

### Corrective action

1. Make sure that the shield water pressure supplied to the cutting system is between 2.76 bar – 7.93 bar (40 psi – 115 psi).

   If the pressure is less than 2.76 bar (40 psi), a "booster" water pump can be necessary to prevent system shutdown or bad cut quality. Refer to Shield-water requirements (VWI and OptiMix) on page 55.

2. Examine all water hoses and water hose inlet fittings for:

   - ☐ Damage or kinks that can restrict flow
   - ☐ Leaks that can decrease pressure

3. Replace any hoses that have damage or kinks.
4. Put the hoses in a different position if you find kinks that can be fixed.
5. Replace any fitting that has damage.
6. Tighten loose connections if found.
7. Examine water regulators for debris that can block the flow path.
8. Adjust the inlet water pressures to a minimum of 2.77 bar (40 psi) when cutting, if necessary.

   The Hypertherm-supplied regulator that is connected to the gas connect console is set at the factory. Do **not** adjust this regulator.

9. If you cannot find or correct the problem, speak to your cutting machine supplier or regional Hypertherm Technical Service team.

## Troubleshooting for low shield gas pressure

### Diagnostic code 534

Diagnostic code 534 identifies when the shield gas pressure in the cutting system is not within the required range. This condition can be caused by problems with the gas hoses, fittings, or the pressure regulator. It can be necessary to examine and adjust or replace these components.

## Symptoms

| Code | Symptoms | XPR models | XPR action | Code cancels with... |
|---|---|---|---|---|
| **534** | For a minimum of 600 milliseconds, the shield gas pressure is less than 75% of the setpoint, and the setpoint is more than 0. | All models | Ramp down | ▪ Set process<br>▪ Remote on-off |

## Corrective action

1. Make sure that the consumables are correct for the operator-selected process.
2. Examine gas hoses and fittings for:
   - ☐ Damage and kinks that can restrict flow
   - ☐ Leaks that can decrease pressure
3. If the hoses and fittings are good, look at the CNC or XPR web interface to identify the shield gas pressure.

   For information about the recommended shield gas pressure by process type, refer to the *XPR Cut Charts Instruction Manual (809830)*.
4. Send a command to do a preflow test.

   Make sure that the pressure is within the correct range for the active process. For information about how to do this, refer to the instruction manual for your CNC.
5. Send a command to do a cutflow test, and continue with the following steps:
   a. Make sure that there is sufficient pressure on P14.

      An error occurs only if the value is less than 75% of the setpoint for at least 600 milliseconds.

   b. If the pressure is too high or too low, use the optional external shield gas regulator to decrease or increase the pressure.

   c. Examine voltage going to J21.1 and J21.2 for B2 and to J7 for V11.

      Refer to Valve states during operation on page 441 to identify if V11 is enabled. Look for voltage between 5 VDC – 24 VDC.

   d. If B2 and V11 do not have the correct voltage, examine the connections between the control PCB in the TorchConnect console and the valves.

      Make sure that the connections are fully engaged. If the connections are fully engaged but the code continues, replace the control PCB.
6. If you cannot get the recommended pressure, or if pressure is within range but the code continues, interchange B2 with B1 or B3, or interchange P14 with a different transducer.

If the code continues, replace B2 or P14, as necessary.

7. If you cannot find or correct the problem, speak to your cutting machine supplier or regional Hypertherm Technical Service team.

# Troubleshooting for low coolant flow

## Diagnostic codes 540, 541, 542

The low coolant flow diagnostic codes (540 – 542) can occur because of a low coolant level, blockages or damage in the coolant hoses, or problems with the coolant pump.

## Symptoms

| Code | Symptoms | XPR models | XPR action | Code cancels with... |
|---|---|---|---|---|
| **540** | For a minimum of 40 seconds after the Plasma Start switch is set to ON, the coolant flow rate is less than 1.9 L/min (0.5 gal/min). | All models | Shut down | Remote on-off |
| **541** | For a minimum of 10 seconds after the coolant flow rate gets to 1.9 L/min (0.5 gal/min), the flow rate stays less than 3.03 L/min (0.8 gal/min). | | | |
| **542** | **XPR170** and **XPR300**: For a minimum of 1 second, the coolant flow rate is less than 3.79 L/min (1 gal/min).<br><br>**XPR460**: The low coolant flow rate limit is less than 2.5 L/min (0.66 gal/min) when the coolant temperature is ≤0°C (≤32°F) or less than 4.9 L/min (1.3 gal/min) when the coolant temperature is ≥40°C (104°F). For flow rates and temperatures that are between these values, use the same scale to calculate the limits. For example, a flow rate less than 3.8 L/min (1.0 gal/min) with a coolant temperature of ≥20°C (68°F) can also cause a 542 code to occur. | | | |

## Corrective action

1. Make sure that the coolant level in the coolant reservoir is sufficient.

   You can see the coolant level from the coolant-level view window on the front of the cooler. You also can see coolant levels on the CNC screen or the XPR web interface.

2. If the coolant reservoir is not full, fill it with coolant.
3. If the coolant reservoir level is sufficient, but the code continues:
   a. Make sure that the coolant pump is ON and the gauge is spinning.
   b. Make sure that the bypass is working.
   c. Examine the coolant hoses for restrictions or blockages.
   d. Make sure that the consumables are correct for the operator-selected process.
   e. Examine the coolant filter, and replace the filter if necessary.

      Refer to Table 30 on page 248.
   f. Clean the coolant pump screen, or replace the screen if you find damage.
4. If coolant filter or coolant pump screen replacement is not necessary, do a coolant flow test to identify the source of a coolant leak or obstruction.
5. Send a process command to start the coolant pump.

   The coolant pump starts automatically when it receives a process command.
6. If the coolant flow test value is equal to or greater than the permitted limit, but the XPR web interface shows a lower value, examine the cooler control PCB (PCB 2 in the cooler) for +24 VDC on J4 pin 3 and pin 5.

| If you get this condition... | Do these steps... |
|---|---|
| There is no voltage on J4 pin 3 and pin 5. | 1. Examine the wire harness that connects to J4.<br>2. Look for a short.<br>3. If no short is found, replace the cooler control PCB. |
| The voltage on J4 pin 3 and pin 5 is +24 VDC. | 1. Examine the flow sensor output (in frequency) at the cooler control PCB.<br>2. Measure the frequency on J4 pin 4 (pulse) and pin 5 (ground).<br>3. If the value is different by more than 0.8 L/min (0.2 gal/min), or if there are no pulses (0 Hz), replace the flow sensor. |

| Minimum flow rate limits | | Frequency (Hz) |
|---|---|---|
| Liters per minute (L/min) | U.S. gallons per minute (gal/min) | |
| 1.89 L/min | 0.5 gal/min | 15 Hz |
| 3.78 L/min | 1.0 gal/min | 33 Hz |
| 5.67 L/min | 1.5 gal/min | 51 Hz |

7. If you cannot find or correct the problem, speak to your cutting machine supplier or regional Hypertherm Technical Service team.

# Troubleshooting for high coolant flow

## Diagnostic codes 543, 544

The high coolant flow diagnostic codes (543 and 544) can occur because of a failed coolant pump. Do these steps to make sure that the coolant pump is operating correctly.

## Symptoms

| Code | Symptoms | XPR models | XPR action | Code cancels with... |
|---|---|---|---|---|
| **543** | For a minimum of 5 seconds after the coolant pump stops, the coolant flow rate is more than 3.03 L/min (0.8 gal/min). | All models | Shut down | ▪ Set process<br>▪ Remote on-off |
| **544** | For a minimum of 1 second, the coolant flow rate is more than 11.36 L/min (3.0 gal/min). This code can also occur when air is in the line or when there is a torch blowout. | All models | Shut down | Remote on-off |

## Corrective action

1. Look at the CNC or XPR web interface to make sure that the coolant pump is operational.
2. For diagnostic code 543, examine the coolant hoses.
   a. Make sure that you have Hypertherm-supplied coolant hoses.
   b. Replace the bad hoses with Hypertherm-supplied coolant hoses, if necessary.
3. For diagnostic code 544, do the following steps to reset the cutting system:
   a. Set the line-disconnect switch to the OFF position.
   b. Examine the torch for consumables that are missing or that have severe damage, which can cause the flow meter to give a higher flow value.

      A missing water tube can also have an effect on coolant flow.
   c. Set the line-disconnect switch to the ON position.
   d. Use the CNC or XPR web interface to send a process command to the cutting system.

      The coolant pump starts automatically when it receives a process command.
   e. If the code continues:
      - Examine the flow meter. Look for air bubbles in the sight glass. Air bubbles can cause the flow meter to give a higher flow value.

- Make sure that the coolant level is slightly more than the level switch.
- Examine the hoses and hose fittings. Look for damage or loose connections.

4. If you cannot find or correct the problem, speak to your cutting machine supplier or regional Hypertherm Technical Service team.

# Troubleshooting for low current

## Diagnostic codes 550, 552 – 554

Diagnostic codes 550 and 552 – 554 identify a problem with a reduction in current in the plasma power supply.

## Symptoms

| Code | Symptoms | XPR models | XPR action | Code cancels with... |
|---|---|---|---|---|
| **550** | For a minimum of 10 milliseconds during a Steady state, the total current decreases to less than 50% of the current setpoint, and the setpoint is more than the setpoint for that process (setpoints can be different for different process types). | All models | End of cycle | ▪ Start process<br>▪ Set process<br>▪ Remote on-off |
| **552** | The Chopper 1 current decreases to less than 50% of the setpoint for 50 milliseconds, and the setpoint is more than 10 A. | All models | End of cycle | ▪ Set process<br>▪ Remote on-off |
| **553** | The Chopper 2 current decreases to less than 50% of the setpoint for 50 milliseconds, and the setpoint is more than 10 A. | XPR300, XPR460 | | |
| **554** | The Chopper 3 current decreases to less than 50% of the setpoint for 50 milliseconds, and the setpoint is more than 10 A. | XPR460 | | |

## Corrective action

1. Examine the consumables, and replace consumables that have damage or excessive wear.
2. Do a test for gas leaks, and replace the leaking components if found.
3. Examine the J6 connector on the control PCB for loose connections, and tighten them if found.
4. Examine the contactors, and replace contactors that have damage.
5. Look for DC bus errors.

6. What system do you have?

| | |
|---|---|
| XPR170 | Go to step 8 on page 330. |
| XPR300 or XPR460 | Continue with the next step. |

7. Interchange the choppers, and make sure that the diagnostic code aligns with the change:
   a. If yes, the chopper is bad and must be replaced.
   b. If no, continue with the next step.
8. Examine the choppers and inductors.
9. Replace choppers or inductors that have damage, if found.
10. Make sure that the arc stays on the workpiece during cutting.
11. Make sure to use the correct techniques and ramp-down settings, especially for cutting holes in simple shapes on aluminum or stainless steel.

    If you do not use proper cutting techniques, diagnostic codes 552 – 554 can replace the diagnostic code for ramp-down errors (620) when the arc distance between the torch and the workpiece increases quickly.
12. If you cannot find or correct the problem, speak to your cutting machine supplier or regional Hypertherm Technical Service team.

# Troubleshooting for high current

## Diagnostic codes 555, 556, 557

Diagnostic codes 555 – 557 identify when the chopper current is too high.

## Symptoms

| Code | Symptoms | XPR models | XPR action | Code cancels with... |
|---|---|---|---|---|
| **555** | For a minimum of 10 milliseconds, the electric current for Chopper 1 is more than 170 A. | All models | Shut down | Remote on-off |
| **556** | For a minimum of 10 milliseconds, the electric current for Chopper 2 is more than 170 A. | XPR300, XPR460 | | |
| **557** | For a minimum of 10 milliseconds, the electric current for Chopper 3 is more than 170 A. | XPR460 | | |

### Corrective action

1. Examine the consumables, and replace the consumables that have damage or excess wear.
2. Do a test for gas leaks, and replace the leaking components if found.
3. Examine the contactors, and replace the contactors that have damage, if found.
4. Look for DC bus errors.
5. What system do you have?

| | |
|---|---|
| XPR170 | Go to step 7 on page 331. |
| XPR300 or XPR460 | Continue with the next step. |

6. Interchange the choppers and make sure that the diagnostic code aligns with the change:
   a. If yes, the chopper is bad and must be replaced.
   b. If no, continue with the next step.
7. Examine the choppers and inductors.
8. Replace choppers or inductors that have damage, if found.
9. Make sure that the arc stays on the workpiece during cutting.
10. If you cannot find or correct the problem, speak to your cutting machine supplier or regional Hypertherm Technical Service team.

## Troubleshooting for over-temperature faults for choppers and coolant

### Diagnostic codes 560 – 562, 587

Diagnostic codes 560 – 562 and 587 identify an over-temperature condition with choppers or coolant. The result can be:

- Potential damage to system components
- Decreased cut quality
- Safety risks because of the system operating outside of its safe temperature range

## Symptoms

| Code | Symptoms | XPR models | XPR action | Code cancels with... |
|---|---|---|---|---|
| **560** | The IGBT temperature for Chopper 1 is more than 75°C (167°F). | All models | Ramp down | – |
| **561** | The IGBT temperature for Chopper 2 is more than 75°C (167°F). | XPR300, XPR460 | | |
| **562** | The IGBT temperature for Chopper 3 is more than 75°C (167°F). | XPR460 | | |
| **587** | **XPR170** and **XPR300**: The coolant temperature in the plasma power supply is more than 85°C (185°F).<br>**XPR460**: The coolant temperature in the cooler is more than 75°C (167°F). | All models | | |

## Corrective action

1. Make sure that there is sufficient clearance around the cooler.

   Make sure that no objects cause a blockage to the cooler fan inlets. Objects that are very near the cooler can get pulled into the fan inlets.

   For sufficient ventilation, Hypertherm recommends a minimum separation distance of 1 meter (3.3 feet) between the cooler and other objects or equipment.

2. Make sure that the ambient temperature at the location of the cooler is in the permitted temperature range for cutting system operation.

   If the temperature around the cooler is more than the temperature limit, you can get reduced performance and over-temperature diagnostic codes.

3. While all of the fans continue to operate, let the temperature of the cutting system decrease.

4. From the XPR web interface, make sure that the heat-exchanger fan speed is in the permitted range.

| Fan type | Permitted range of speed |
|---|---|
| Large fans (254 mm / 10 inch) | 2,800 RPM – 3,400 RPM |
| Small fans (120 mm / 4.7 inch) | 5,600 RPM – 6,400 RPM |

5. If the fan speed is in the permitted range, remove the power from the cutting system.

6. Remove the pump-side panel from the cooler.

7. Make sure that each heat-exchanger fan has no visible obstruction, dust, or debris.
   - ☐ Use compressed air to clean this area, if necessary. Use personal protective equipment for protection from airborne particulates and debris.
   - ☐ Make sure to keep fan rotation to a minimum during compressed air use. You can use a gloved hand to hold a fan in position, if necessary.
   - ☐ Also make sure to fully install the panels on the cooler. When there are no side panels, there is no air flow across the heat exchanger, which prevents the system from becoming cool.
8. Measure the resistance for the thermistor:
   a. To measure the resistance for a chopper thermistor, disconnect the connector for that chopper in the plasma power supply.
   b. To measure the resistance for the coolant thermistor, remove the coolant thermistor wires from the connector in the cooler.

      Doing these steps makes it easier to measure only the resistance for the thermistors.
   c. Use a digital multimeter to measure the resistance from each thermistor wire, using these diagnostic codes and connector-pin locations:

| Diagnostic code | Thermistor location | Location of thermistor wires / connector | Pins | |
|---|---|---|---|---|
| 560, 667, 678 | Chopper 1 (cold plate) | PCB 2 (plasma power supply) | J9 pin 1 | J9 pin 2 |
| 561, 668, 679 | Chopper 2 (cold plate) (XPR300 and XPR460 only) | PCB 3 (plasma power supply) | J9 pin 1 | J9 pin 2 |
| 562, 669, 680 | Chopper 3 (cold plate) (XPR460 only) | PCB 8 (plasma power supply) | J9 pin 1 | J9 pin 2 |
| 587, 670, 681 | Heat exchanger | PCB 2 (cooler) | J2.4 pin 1 | J2.4 pin 2 |

   d. Look for a resistance value that is outside of the minimum or maximum values in Ohmic resistance values for thermistors on page 334.

      At approximately 25°C (77°F), look for a resistance of approximately 10,000 ohms (Ω).

| | | |
|---|---|---|
| 85 | 750 | 1250 |
| 95 | 600 | 1000 |
| 105 | 400 | 800 |

| | | |
|---|---|---|
| 115 | 300 | 600 |
| 125 | 200 | 500 |
| 135 | 150 | 400 |
| 145 | 150 | 250 |
| 155 | 125 | 225 |
| 165 | 100 | 175 |

e. For each resistance value that you measure, do the following:

| If you see this condition... | Do these steps... |
|---|---|
| The resistance value is outside of the minimum or maximum value in Ohmic resistance values for thermistors on page 334. | Look for a wiring fault. To make a decision on if thermistor replacement is necessary, speak to your cutting machine supplier or regional Hypertherm Technical Service team. |
| The resistance value is approximately 0 ohms (Ω). | 1. Examine the wiring between each thermistor and its connector pins.<br>2. Look for shorts between wires or to the ground. |
| The resistance value is more than 100 ohms (Ω) and less than the minimum resistance value. | 1. Remove the power from the cutting system.<br>2. Let the coolant get to a temperature that is ≤ 75°C (167°F).<br>3. Supply power to the cutting system.<br>4. Go back to the beginning of step 8 on page 333. |
| The resistance continues to be less than the minimum ohmic value or does not change after the coolant is ≤ 75°C (167°F). | ▪ Replace chopper 1 (PCB 2) for diagnostic code 560.<br>▪ Replace chopper 2 (PCB 3) for diagnostic code 561.<br>▪ Replace chopper 3 (PCB 8) for diagnostic code 562.<br>▪ Replace the copper pipe thermistor assembly for error code 587. |
| The thermistor resistance is in the permitted range when the thermistor is disconnected from the control PCB, and the code continues when the thermistor is reconnected to the control PCB. | To make a decision on if replacement of the control PCB is necessary, speak to your cutting machine supplier or regional Hypertherm Technical Service team. |
| The resistance is in the permitted range. | You can continue to operate the plasma cutting system. |

9. If you cannot find or correct the problem, speak to your cutting machine supplier or regional Hypertherm Technical Service team.

## Ohmic resistance values for thermistors

This data can help you to identify if there is a problem with the thermistor or wiring.

**Table 35 -** Minimum and maximum ohmic resistance values for thermistors

| Thermistor temperature | Minimum resistance (Ohms) | Maximum resistance (Ohms) |
|---|---|---|
| 25°C (77°F) | 9,000 | 11,000 |
| 35°C (95°F) | 5,000 | 7,000 |
| 45°C (113°F) | 3,900 | 4,900 |
| 55°C (131°F) | 2,500 | 3,500 |
| 65°C (149°F) | 1,500 | 2,500 |
| 75°C (167°F) | 1,000 | 2,000 |
| 85°C (185°F) | 750 | 1,250 |
| 95°C (203°F) | 600 | 1,000 |
| 105°C (221°F) | 400 | 800 |
| 115°C (239°F) | 300 | 600 |
| 125°C (257°F) | 200 | 500 |
| 135°C (275°F) | 150 | 400 |
| 145°C (293°F) | 150 | 250 |
| 155°C (311°F) | 125 | 225 |
| 165°C (329°F) | 100 | 175 |

# Troubleshooting for start switch faults

## Diagnostic codes 570, 571, 574 – 577

Diagnostic codes 570 – 577 can identify problems with the CNC, PCB, discrete cable, or the D50 LED on the control PCB (PCB 1) in the plasma power supply.

## Symptoms

| Code | Symptoms | XPR models | XPR action | Code cancels with... |
|---|---|---|---|---|
| **570** | The Plasma Start switch is in the ON position before the cutting system goes into the Power-up state. | All models | None | ▪ Start process<br>▪ Set process<br>▪ Remote on-off |
| **571** | The Plasma Start switch is in the ON position before the cutting system goes into the Wait for Start state. | | | |
| **574** | The Plasma Start switch is in the OFF position during the Preflow/Charge DC state. | All models | End of cycle | ▪ Start process<br>▪ Set process<br>▪ Remote on-off |
| **575** | The Plasma Start switch is in the OFF position during the Ignite state. | | | |
| **576** | The Plasma Start switch is in the OFF position during the Pilot Arc state. | | | |
| **577** | The Plasma Start switch is in the OFF position during the Ramp-up state. | | | |

## Corrective action

1. Use the CNC or XPR web interface to make sure that the status of the cutting system is correct and to make sure that a cutting sequence is **not** active.
2. Remove the power from the cutting system.
3. Remove the control-side panel from the plasma power supply.
4. Supply power to the cutting system.
5. If the code continues after you supply power to the cutting system, examine the D50 LED on the control PCB (PCB 1) in the plasma power supply to find if it is illuminated.

| If you see this condition... | Do these steps... |
|---|---|
| D50 is not illuminated. | There is a problem with the CNC. Refer to the instruction manual for your CNC for troubleshooting recommendations. |
| D50 is illuminated. | 1. Remove the power from the cutting system.<br>2. Remove the connector from J14 on the rear of the plasma power supply.<br>3. Supply power to the cutting system.<br>4. Continue with the next step. |

6. Examine D50 on PCB 1 again to find if it stays illuminated:

| If you see this condition... | Do these steps... |
|---|---|
| D50 is illuminated while the discrete cable stays disconnected. | 1. Examine the PCB for dust or other contaminants.<br>2. Use compressed air to remove dust, debris, or obstructions, if found.<br>3. If D50 stays illuminated with the discrete cable disconnected, there is a problem with the PCB. Speak to your cutting machine supplier. |
| D50 is not illuminated. | 1. If the discrete cable has no visible damage, disconnect the cable from PCB 1.<br>2. Look for an open circuit between pin 3 and pin 4 of J14.<br>3. If the cable is good, make sure that the CNC output is set to OFF.<br>4. If there is a short circuit, make sure that the discrete cable is not shorted and that the CNC start signal output is set to OFF. A closed circuit can be an indication that the CNC sent a plasma-start signal or that the discrete cable has damage. |
| The diagnostic code goes away, but D50 is not illuminated while the discrete cable stays disconnected. | 1. Look for shorts across the line.<br>2. Look for relays that are bad.<br>3. Look for loose connections.<br>4. Examine the discrete cable, and replace it if it has damage. Refer to Discrete CNC interface cables on page 429. |

7. If you cannot find or correct the problem, speak to your cutting machine supplier or regional Hypertherm Technical Service team.

# Troubleshooting for over-temperature faults for inductors and transformers

## Diagnostic codes 580 – 586, 589, 793

These over-temperature diagnostic codes identify when the temperature of the inductors or transformers in the plasma system is more than the permitted range.

## Symptoms

| Code | Symptoms | XPR models | XPR action | Code cancels with... |
|---|---|---|---|---|
| **580** | The temperature of one of the following inductors is more than 160°C (320°F):<br>▪ Inductor 1 (1A)<br>▪ Inductor 2 (1B)<br>▪ Inductor 3 (2A)<br>▪ Inductor 4 (2B)<br>▪ Inductor 5 (3A)<br>▪ Inductor 6 (3B)<br>When conditions are normal, approximately 10 minutes are necessary for the plasma cutting system to become cool. Over-temperature diagnostic codes can occur when more than 10 minutes are necessary for the temperature of the plasma system to decrease.<br>A high ambient temperature can have an effect on cooling time. | All models | Ramp down | – |
| **581** | | | | |
| **582** | | XPR300, XPR460 | | |
| **583** | | | | |
| **584** | | XPR460 | | |
| **585** | | | | |
| **586** | For a minimum of 5 seconds, the temperature of a transformer is more than 160°C (320°F). | All models | | |
| **589** | | XPR460 | | |
| **793** | For a minimum of 5 seconds, the temperature of the control transformer is more than 160°C (320°F). | XPR460 | | |

## Corrective action

1. Make sure that there is sufficient clearance around the plasma power supply.

   For sufficient ventilation, Hypertherm recommends a minimum separation distance of 1 meter (3.3 feet) between the plasma power supply and other objects or equipment.

2. Make sure that the ambient temperature at the location of the plasma power supply is in the permitted temperature range for cutting system operation.

   If the temperature around your plasma power supply is more than the temperature limit, you can get reduced performance and over-temperature diagnostic codes. Refer to Table 1 on page 31.

3. While all of the fans continue to operate, let the temperature of the cutting system decrease.

4. Make sure that the magnetics are at a temperature of ≤160°C (320°F) before you continue with the next step.

5. **Without removing the external side panel** on the plasma power supply, look through the ventilation trusses on the plasma power supply to examine the magnetics fans inside.

Look through the ventilation trusses on the front of the plasma power supply to see the magnetics fans (254 mm / 10 inches) inside. It is **not** necessary to remove the external panels to see these fans. The magnetics fans are near the front and bottom.

6. From the XPR web interface, make sure that the speed for each magnetics fan is in the permitted range.

   During normal operation, it can be difficult to see individual blades because of the fast speed of the fan rotation. If you can easily see individual blades without the use of a strobe lamp, the rotation speed is possibly too slow.

| Fan type | Permitted range of speed |
|---|---|
| Large fans (254 mm / 10 inches) | 2,800 RPM – 3,400 RPM |
| Small fans (120 mm / 4.7 inches) | 5,600 RPM – 6,400 RPM |

7. If the speed of the fans is less than the permitted range, remove the electric power from the cutting system.
8. Remove the front panel from the plasma power supply.
9. If you find obstructions, debris, or dust, use compressed air to remove the obstruction, debris, or dust from the fans and from the magnetics area.

   The magnetics area can collect large amounts of dust or debris. Multiple uses of compressed air is often necessary to clean this area. Use personal protective equipment for protection from airborne particulates and debris.

   Make sure to keep fan rotation to a minimum during compressed air use. You can use a gloved hand to hold a fan in position, if necessary.
10. If the magnetics fans have no visible obstruction, dust, or debris:
    a. Disconnect the connector from the control PCB (for the magnetics).
    b. Use a digital multimeter and the following connector-pin locations to measure the resistance from each thermistor wire:

       Thermistors are on the magnetics.

| Diagnostic codes | Thermistor location | Location of thermistor wires/connector | 1st connector pin | 2nd connector pin |
|---|---|---|---|---|
| 580, 660, 671 | Inductor 1A | PCB 1 (plasma power supply) | J1.4 pin 3 | J1.4 pin 4 |
| 581, 661, 672 | Inductor 1B | PCB 1 (plasma power supply) | J1.4 pin 5 | J1.4 pin 6 |
| 582, 662, 673 | Inductor 2A | PCB 1 (plasma power supply) | J1.4 pin 7 | J1.4 pin 8 |

| Diagnostic codes | Thermistor location | Location of thermistor wires/connector | 1st connector pin | 2nd connector pin |
|---|---|---|---|---|
| 583, 663, 674 | Inductor 2B | PCB 1 (plasma power supply) | J1.2 pin 1 | J1.2 pin 2 |
| 584, 664, 675 | Inductor 3A | PCB 1 (plasma power supply) | J1.2 pin 3 | J1.2 pin 4 |
| 585, 665, 676 | Inductor 3B | PCB 1 (plasma power supply) | J1.2 pin 5 | J1.2 pin 6 |
| 586, 666, 677 | Transformer 1 | PCB 1 (plasma power supply) | J1.4 pin 1 | J1.4 pin 2 |
| 589, 682 , 683 | Transformer 2 | PCB 1 (plasma power supply) | J1.25 pin 1 | J1.25 pin 2 |
| 791, 792, 793 | Control transformer | PCB 1 (plasma power supply) | J1.25 pin 3 | J1.25 pin 4 |

c. Look for a resistance value from each thermistor wire that is outside of the minimum or maximum value in Ohmic resistance values for thermistors on page 334.

At approximately 25°C (77°F), look for a resistance of approximately 10,000 ohms (Ω).

d. For each resistance value that you measure, do the following:

| If you see this condition... | Do these steps... |
|---|---|
| The ohmic resistance is outside of the minimum or maximum value in Ohmic resistance values for thermistors on page 334. | Look for a wiring fault. To make a decision on if thermistor replacement is necessary, speak to your cutting machine supplier or regional Hypertherm Technical Service team. |
| The resistance value is approximately 0 ohms (Ω). | 1. Examine the wiring between each thermistor and its connector pins.<br>2. Look for shorts between wires or to the ground. |
| The thermistor resistance is in the permitted range when the thermistor is disconnected from the control PCB, and the code continues when the thermistor is reconnected to the control PCB. | To make a decision on if replacement of the control PCB is necessary, speak to your cutting machine supplier or regional Hypertherm Technical Service team. Refer to Plasma power supply control PCB (141545) diagram on page 382. |

11. If you cannot find or correct the problem, speak to your cutting machine supplier or regional Hypertherm Technical Service team.

# Troubleshooting for a fan timeout

## Diagnostic code 588

Diagnostic code 588 identifies a problem with an internal fan.

### Symptoms

| Code | Symptoms | XPR models | XPR action | Code cancels with... |
|---|---|---|---|---|
| **588** | Fan timeout codes can occur when the cooling period is more than one hour.<br>A high ambient temperature can have an effect on cooling time. | All models | Shut down | – |

### Corrective action

1. Identify the over-temperature diagnostic codes that show on the XPR web interface.
2. Use the recommended troubleshooting steps for the codes that you see.

   Refer to Diagnostic codes on page 278.

## Troubleshooting for consumable part failure or no chopper current

### Diagnostic codes 610 – 615 and 626 – 628

Diagnostic codes 610 – 615 identify a consumable part problem. Diagnostic codes 626 – 628 identify a condition when chopper current is not sufficient.

### Symptoms

| Code | Symptoms | XPR models | XPR action | Code cancels with... |
|---|---|---|---|---|
| **610** | A catastrophic failure of a consumable part is found on the Channel A Chopper 1 current signature. | All models | Ramp down | Remote on-off |
| **611** | A catastrophic failure of a consumable part is found on the Channel B Chopper 1 current signature. | All models | | |
| **612** | A catastrophic failure of a consumable part is found on the Channel A Chopper 2 current signature. | XPR300, XPR460 | | |
| **613** | A catastrophic failure of a consumable part is found on the Channel B Chopper 2 current signature. | XPR300, XPR460 | | |
| **614** | A catastrophic failure of a consumable part is found on the Channel A Chopper 3 current signature. | XPR460 | | |
| **615** | A catastrophic failure of a consumable part is found on the Channel B Chopper 3 current signature. | XPR460 | | |

| Code | Symptoms | XPR models | XPR action | Code cancels with... |
|---|---|---|---|---|
| **626** | For a minimum of 250 milliseconds after the Arc-on state starts, Chopper 1 does not make current.<br>This code is applicable only for processes that start with argon (Ar) gas. | All models | End of cycle | Remote on-off |
| **627** | For a minimum of 250 milliseconds after the Arc-on state starts, Chopper 2 does not make current. | XPR300, XPR460 | | |
| **628** | For a minimum of 250 milliseconds after the Arc-on state starts, Chopper 3 does not make current. | XPR460 | | |

### Corrective action

1. Examine the consumable parts for damage and excess wear.
2. If a consumable part must be replaced, refer to Install the consumables on page 149.
3. If you cannot find or correct the problem, speak to your cutting machine supplier or regional Hypertherm Technical Service team.

## Troubleshooting for a ramp-down error

### Diagnostic code 620

Diagnostic code 620 shows that there is a ramp-down error.

### Symptoms

| Code | Symptoms | XPR models | XPR action | Code cancels with... |
|---|---|---|---|---|
| **620** | The chopper duty cycle is more than the programmed limit. A ramp-down error can be the cause:<br>▪ During a ramp-down error, the arc distance between the torch and the workpiece increases quickly.<br>▪ Ramp-down errors can decrease consumable life.<br>▪ The plasma cutting system can sense and react to ramp-down errors. This helps to increase the life of consumable parts. Refer to Automatic ramp-down error protection on page 245. | All models | Ramp down | ▪ Start or set process<br>▪ Remote on-off |

### Corrective action

1. Make sure to use correct cutting techniques:
   a. Use a workpiece that is large enough for the selected parts or nesting program.
   b. Use the correct parts or nesting program.

      Ramp-down errors can occur when you cut across large kerfs or cut at incorrect heights.
   c. Stop every cut with the plasma arc still attached to the workpiece.
   d. Decrease the cut speed when the end of the cut is near.
   e. Stop the plasma arc before the part is completely cut, or let the cut complete during ramp down.
   f. Program the path of the torch into the scrap area for ramp down.

## Troubleshooting for high DC bus voltage

### Diagnostic code 621

Diagnostic code 621 occurs when the DC bus voltage is too high.

### Symptoms

| Code | Symptoms | XPR models | XPR action | Code cancels with... |
|---|---|---|---|---|
| **621** | The DC bus voltage is more than 414 V. | All models | Shut down | Remote on-off |

### Corrective action

1. Make sure that the input-line voltage is within ±14% of nominal.

   Refer to General input power requirements on page 44.
2. If you cannot find or correct the problem, speak to your cutting machine supplier or regional Hypertherm Technical Service team.

## Troubleshooting for low DC bus voltage

### Diagnostic code 622

Diagnostic code 622 occurs when the DC bus voltage is too low.

## Symptoms

| Code | Symptoms | XPR models | XPR action | Code cancels with... |
|---|---|---|---|---|
| **622** | The DC bus voltage is less than 280 V. | All models | Shut down | Remote on-off |

## Corrective action

1. Make sure that the input-line voltage is within ±14% of nominal.

   Refer to General input power requirements on page 44.

2. Remove the power from the cutting system.
3. Remove the cover from the contactor.
4. Examine the contacts for excess wear, and replace the contactor if there is excess wear.
5. Examine the following contactor components for loose connections:
   a. Contactor
   b. Input to the chopper
   c. Power cord
6. Tighten loose connections if found.
7. Examine the connections from the control PCB on J6:
   a. Look for loose or bad connections on pin 5 and pin 6.
   b. Tighten loose connections, or replace bad connections.
8. Make sure that LED D1 on the power distribution PCB is illuminated.
9. If D1 is not illuminated, examine the power distribution PCB for:
   a. 120 VAC at the input (J1 pin 5 and pin 6)
   b. Continuity on fuse FH2 (with power OFF)
   c. 120 VAC at the output (J5 pin 7, pin 8, pin 9, and pin 10)
10. If 120 VAC is not present on the J5 contactor output pins, examine the J4 and K1 relay connections for damage.
11. If K1 is bad, replace either the power distribution PCB or the K1 relay (003257).
12. If you cannot find or correct the problem, speak to your cutting machine supplier or regional Hypertherm Technical Service team.

# Troubleshooting for idle choppers with current

## Diagnostic codes 623, 624, 625

Diagnostic codes 623 – 625 identify if current is present in a chopper when the chopper is in an idle state.

## Symptoms

| Code | Symptoms | XPR models | XPR action | Code cancels with... |
|---|---|---|---|---|
| **623** | Chopper 1 is in an idle state, and the chopper current is more than 10 A. | All models | None | Remote on-off |
| **624** | Chopper 2 is in an idle state, and the chopper current is more than 10 A. | XPR300, XPR460 | | |
| **625** | Chopper 3 is in an idle state, and the chopper current is more than 10 A. | XPR460 | | |

## Corrective action

1. Look for 24 VDC from the power sources (J2 pins 1 – 3).
2. If you find 24 VDC from the power sources, the chopper is bad.
3. Replace the chopper if necessary.

# Troubleshooting for current sensor faults

## Diagnostic code 631

Diagnostic code 631 can occur because of potential problems with the current sensor. Do a check of the specified connections. In some conditions it can be necessary to replace the I/O PCB (PCB 5).

## Symptoms

| Code | Symptoms | XPR models | XPR action | Code cancels with... |
|---|---|---|---|---|
| **631** | The current in the work cable is more than 5 A while the plasma cutting system is in the Wait for Start state. | All models | Shut down | Remote on-off |

### Corrective action

1. Remove the power from the cutting system.
2. Examine J1.8 on PCB 1 (the control PCB in the plasma power supply) and the work cable sensor on the I/O panel on PCB 5 (the I/O PCB in the plasma power supply) for damage and loose connections.
3. If the connections are good and the code continues, replace the I/O PCB.
4. If you cannot find or correct the problem, speak to your cutting machine supplier or regional Hypertherm Technical Service team.

## Troubleshooting for arc timeouts during the Ignite state

### Diagnostic code 654

Diagnostic code 654 identifies a problem related to plasma arc timeouts at the start of a cut.

### Symptoms

| Code | Symptoms | XPR models | XPR action | Code cancels with... |
|---|---|---|---|---|
| **654** | During the Ignite state, Chopper 1 does not go into the Pilot Arc state for a minimum of 100 millisec-onds. | All models | End of cycle | Remote on-off |

### Corrective action

1. Remove the power from the cutting system.
2. Supply power to the cutting system.
3. Send a process to the cutting system.
4. If you cannot find or correct the problem, speak to your cutting machine supplier or regional Hypertherm Technical Service team.

## Troubleshooting for current in chopper during preflow

### Diagnostic code 655

Diagnostic code 655 occurs when the chopper finds current during preflow.

### Symptoms

| Code | Symptoms | XPR models | XPR action | Code cancels with... |
|---|---|---|---|---|
| **655** | A chopper finds current during the Preflow/Charge DC state. | All models | Shut down | ▪ Start process<br>▪ Set process<br>▪ Remote on-off |

### Corrective action

1. Examine the consumable parts for damage or excess wear.
2. If it is necessary to replace a consumable part, refer to Install the consumables on page 149.
3. Examine the torch lead, and look for a short or open line condition.

## Troubleshooting for a console reset message

### Diagnostic code 691

Diagnostic code 691 occurs when the console receives a console reset message.

### Symptoms

| Code | Symptoms | XPR models | XPR action | Code cancels with... |
|---|---|---|---|---|
| **691** | The main control PCB receives a console reset message after power is supplied to the plasma cutting system. | All models | Shut down | ▪ Set process<br>▪ Remote on-off |

### Corrective action

1. Examine the grounding for the cutting system.

   High frequency EMI (also known as noise) can reset the CAN node.
2. Make sure that the green power-indicator LED on the gas connect console and on the TorchConnect console is illuminated.
3. If an LED is not illuminated, examine the power distribution PCB and look for:
   a. Loose and poorly connected connectors and CAN cables
   b. Signs of 120 V (the D1 LED is illuminated)
4. If D1 is illuminated, examine the plasma power supply control PCB.

5. Make sure that the remote on-off switch is in the ON position (enabled) and the D89 LED is illuminated.

   If necessary, set the remote on-off switch to OFF and then back to ON.

6. If you cannot find or correct the problem, speak to your cutting machine supplier or regional Hypertherm Technical Service team.

   Make sure that you have the record ID for the error.

# Troubleshooting for low inlet pressure for hydrogen, argon, or nitrogen

## Diagnostic codes 695 – 697

Diagnostic codes 695 – 697 occur because gas inlet pressure in the gas connect console mixing module is less than the permitted range. Do a check of the gas inlet pressure during test cutflow and test preflow to find if the supply gas settings at the regulator are correct. Also examine the gas hoses and fittings.

## Symptoms

| Code | Symptoms | XPR models | XPR action | Code cancels with... |
|---|---|---|---|---|
| **695** | The hydrogen ($H_2$) inlet pressure (P10) for the mixing module in the gas connect console (only for OptiMix) is less than 8.3 bar ± 0.4 (120 psi ± 5). | All models | None | ▪ Set process<br>▪ Remote on-off |
| **696** | The argon (Ar) inlet pressure (P11) for the mixing module in the gas connect console (only for OptiMix) is less than 8.3 bar ± 0.4 (120 psi ± 5). | | | |
| **697** | The nitrogen ($N_2$) inlet pressure (P12) for the mixing module in the gas connect console (only for OptiMix) is less than 8.3 bar ± 0.4 (120 psi ± 5). | | | |

## Corrective action

1. During test cutflow and test preflow, look at the CNC or XPR web interface to identify the gas inlet pressure in the mixing module inside the gas connect console.

   Look at:

   - ☐ The $H_2$ inlet pressure (P10) for code 695
   - ☐ The Ar inlet pressure (P11) for code 696
   - ☐ The $N_2$ inlet pressure (P12) for code 697

2. Make sure that the gas inlet pressures inside of the gas connect console are sufficient as specified in Permitted inlet pressures to gas connect consoles on page 349.
3. When gases are flowing and the pressure that you measured is not in the permitted range, use the regulators to increase the pressure, if necessary.

   Do **not** exceed the recommended pressures.
4. If the pressure stays too low, examine the gas hoses and gas inlet fittings for:
   - ☐ Damage or kinks that can restrict flow
   - ☐ Leaks that can decrease pressure
5. Replace the hoses if you find damage or kinks.
6. Put the hoses in a different position if you find kinks that can be fixed.
7. Replace fittings that have damage.
8. Tighten loose connections if found.
9. If you cannot find or correct the problem, speak to your cutting machine supplier or regional Hypertherm Technical Service team.

### Permitted inlet pressures to gas connect consoles

| Gas connect console | Permitted gas inlet pressures to the gas connect console | | | | |
|---|---|---|---|---|---|
| | $H_2$ | $N_2$ | Ar | F5 | $H_20$ |
| Core | – | 7.5 bar ± 0.4 (110 psi ± 5) | – | – | – |
| CorePlus | – | 7.5 bar ± 0.4 (110 psi ± 5) | 7.5 bar ± 0.4 (110 psi ± 5) | – | – |
| VWI | – | 7.5 bar ± 0.4 (110 psi ± 5) | 7.5 bar ± 0.4 (110 psi ± 5) | 7.5 bar ± 0.4 (110 psi ± 5) | 2.8 bar – 8.3 bar (40 psi – 120 psi) |
| OptiMix | 8.3 bar ± 0.4 (120 psi ± 5) | 8.3 bar ± 0.4 (120 psi ± 5) | 8.3 bar ± 0.4 (120 psi ± 5) | 7.9 bar ± 0.4 (115 psi ± 5) | 2.8 bar – 8.3 bar (40 psi – 120 psi) |

## Troubleshooting for low inlet pressure for F5 gas

### Diagnostic code 700

Diagnostic code 700 occurs because F5 gas inlet pressure in the gas connect console is less than the permitted range. Do a check of the pressures and examine the gas hoses and fittings.

### Symptoms

| Code | Symptoms | XPR models | XPR action | Code cancels with... |
|---|---|---|---|---|
| **700** | The F5 inlet pressure (P6) in the gas connect console (only for VWI or OptiMix) is less than 5.52 bar (80 psi) or more than 9.3 bar (135 psi). | All models | None | ▪ Set process<br>▪ Remote on-off |

### Corrective action

1. During test cutflow and test preflow, look at the CNC or XPR web interface to identify the gas inlet pressure in the gas connect console.

   Look at the F5 inlet pressure (P6) for code 700.

2. Make sure that the gas inlet pressures inside of the gas connect console are sufficient as specified in Permitted inlet pressures to gas connect consoles on page 349.

3. When gases are flowing and the pressure that you measured is not in the permitted range, use the regulators to increase the pressure, if necessary.

   Do **not** exceed the recommended pressures.

4. If the pressure stays too low, examine the gas hoses and gas inlet fittings for:

   - ☐ Damage or kinks that can restrict flow
   - ☐ Leaks that can decrease pressure

5. Replace the hoses if you find damage or kinks.

6. Put the hoses in a different position if you find kinks that can be fixed.

7. Replace fittings that have damage.

8. Tighten loose connections if found.

9. If you cannot find or correct the problem, speak to your cutting machine supplier or regional Hypertherm Technical Service team.

## Troubleshooting for low inlet pressure for water

### Diagnostic code 701

Diagnostic code 701 occurs because water inlet pressure in the gas connect console is less than the permitted range. Do a check of the pressures, examine the water hoses and fittings, and make sure that the shield water quality is good.

## Symptoms

| Code | Symptoms | XPR models | XPR action | Code cancels with... |
|---|---|---|---|---|
| **701** | The water ($H_2O$) inlet pressure (P8) in the gas connect console (only for VWI or OptiMix) is less than 2.07 bar (30 psi). | All models | None | ▪ Set process<br>▪ Remote on-off |

## Corrective action

1. During test cutflow and test preflow, look at the CNC or XPR web interface to identify water inlet pressure in the gas connect console.

   Look at the $H_2O$ inlet pressure (P8) for code 701.

2. Make sure that the gas inlet pressures inside of the gas connect console are sufficient as specified in Permitted inlet pressures to gas connect consoles on page 349.

3. Make sure that the water inlet pressure is at least 2.07 bar (40 psi).

4. When water is flowing and the pressure that you measured is not in the permitted range, use the regulators to increase the pressure, if necessary.

   Do **not** exceed the recommended pressures.

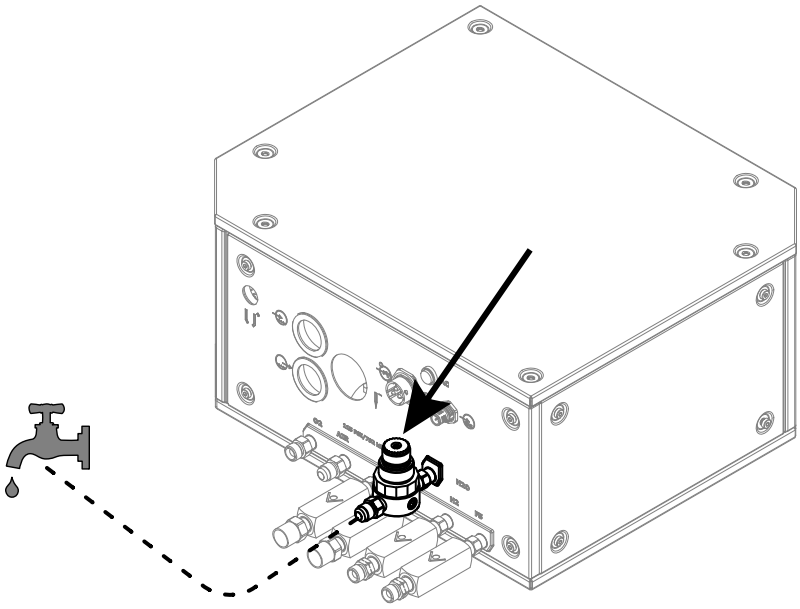

5. If the pressure stays too low, examine the gas hoses and gas inlet fittings for:

   - ☐ Damage or kinks that can restrict flow
   - ☐ Leaks that can decrease pressure

6. Replace the hoses if you find damage or kinks.

7. Put the hoses in a different position if you find kinks that can be fixed.
8. Replace fittings that have damage.
9. Tighten loose connections if found.
10. Make sure that the shield water quality is good.

    Bad quality can have a bad effect on the shield water regulator. It can cause diagnostic codes for low inlet pressure. Refer to Shield-water requirements (VWI and OptiMix) on page 55.

11. If you cannot find or correct the problem, speak to your cutting machine supplier or regional Hypertherm Technical Service team.

# Troubleshooting for shield gas inlet pressure in the TorchConnect console

## Diagnostic codes 702 – 705

When diagnostic codes 702 – 705 occur, do this troubleshooting procedure to fix problems with the inlet pressure inside the TorchConnect console. Make sure that gas inlet pressures are in the permitted range, and examine hoses and fittings for damage or kinks.

## Symptoms

| Code | Symptoms | XPR models | XPR action | Code cancels with... |
|---|---|---|---|---|
| **702** | For a minimum of 200 milliseconds, the nitrogen ($N_2$) inlet pressure (P4) in the TorchConnect console is less than 5.52 bar (80 psi) or more than 8.61 bar (125 psi). | All models | None | ▪ Set process<br>▪ Remote on-off |
| **703** | For a minimum of 200 milliseconds, the oxygen ($O_2$) inlet gas pressure (P4) in the TorchConnect console is less than 5.52 bar (80 psi) or more than 8.61 bar (125 psi). | | | |
| **704** | For a minimum of 200 milliseconds, the air inlet pressure (P4) in the TorchConnect console is less than 5.52 bar (80 psi) or more than 8.61 bar (125 psi). | | | |
| **705** | For a minimum of 200 milliseconds, the argon (Ar) inlet pressure (P4) in the TorchConnect console is less than 5.52 bar (80 psi) or more than 8.61 bar (125 psi). | | | |

## Corrective action

1. Look at the CNC screen or XPR web interface to identify the inlet pressure inside the TorchConnect console.

   Look at:

   - The $N_2$ inlet pressure (P4) for code 702
   - The $O_2$ inlet pressure (P4) for code 703
   - The air inlet pressure (P4) for code 704
   - The Ar inlet pressure (P4) for code 705

2. Make sure that the gas inlet pressures inside the TorchConnect console are in the permitted range that is specified in Permitted inlet pressures to the TorchConnect console on page 353.
3. Use the regulators to increase or decrease the inlet pressure.
4. If the pressure stays too low, examine the gas hoses and gas inlet fittings for:

   - Damage or kinks that can decrease flow
   - Leaks that can decrease pressure

5. Replace the hoses if you find damage or kinks.
6. Reposition the hoses if you find fixable kinks.
7. Replace fittings that have damage.
8. Tighten loose connections if found.
9. If you cannot find or correct the problem, speak to your cutting machine supplier or regional Hypertherm Technical Service team.

## Permitted inlet pressures to the TorchConnect console

| Gas connect console | Permitted gas inlet pressures to the TorchConnect console | | | |
|---|---|---|---|---|
| | $N_2$ | $O_2$ | Air | Ar |
| Core | 7.5 bar ± 0.4 (110 psi ± 5) | 7.5 bar ± 0.4 (110 psi ± 5) | 7.5 bar ± 0.4 (110 psi ± 5) | – |
| CorePlus | 7.5 bar ± 0.4 (110 psi ± 5) | 7.5 bar ± 0.4 (110 psi ± 5) | 7.5 bar ± 0.4 (110 psi ± 5) | 7.5 bar ± 0.4 (110 psi ± 5) |
| VWI | 7.5 bar ± 0.4 (110 psi ± 5) | 7.5 bar ± 0.4 (110 psi ± 5) | 7.5 bar ± 0.4 (110 psi ± 5) | 7.5 bar ± 0.4 (110 psi ± 5) |
| OptiMix | 6.9 bar ± 0.7 (100 psi ± 10) | 7.9 bar ± 0.4 (115 psi ± 5) | 7.9 bar ± 0.4 (115 psi ± 5) | 6.9 bar ± 0.7 (100 psi ± 10) |

# Troubleshooting for process-gas inlet pressure faults in the TorchConnect console for OptiMix systems

## Diagnostic codes 702, 705, 769, and 770

The 702, 705, 769, and 770 diagnostic codes identify a problem with the process-gas inlet pressure. Process-gas inlet pressure has an effect on cut quality, cut speed, and consumable life.

The nitrogen ($N_2$) and Argon (Ar) gas regulators inside the OptiMix gas connect console are set at Hypertherm before the regulators are installed in the gas connect console. The regulators are set in a dynamic condition, when gas is flowing, with 7.9 bar – 8.6 bar (115 psi – 125 psi) on the inlet and 6.9 bar (100 psi) on the outlet. A downstream 1.6 mm (0.063 inch) orifice is part of both regulator setting configurations.

It can be necessary to adjust the regulators if the following conditions occur:

- The $N_2$ shield inlet (P4) pressure is more than 7.5 bar (110 psi) or less than 6.2 bar (90 psi).
- The Ar shield inlet (P4) pressure is more than 7.5 bar (110 psi) or less than 6.2 bar (90 psi).

## Symptoms

| Code | Symptoms | XPR models | XPR action | Code cancels with... |
|---|---|---|---|---|
| **702** | For a minimum of 200 milliseconds, the nitrogen ($N_2$) inlet pressure (P4) in the TorchConnect console is less than 5.52 bar (80 psi) or more than 8.61 bar (125 psi). | All models | None | ▪ Set process<br>▪ Remote on-off |
| **705** | For a minimum of 200 milliseconds, the argon (Ar) inlet pressure (P4) in the TorchConnect console is less than 5.52 bar (80 psi) or more than 8.61 bar (125 psi). | | | |
| **769** | Line B Argon inlet pressure (P1) is less than 5.52 bar (80 psi) or more than 8.62 bar (125 psi). | | | |
| **770** | Line B $N_2$ inlet pressure (P1) is less than 5.52 bar (80 psi) or more than 8.62 bar (125 psi). | | | |

## Corrective action to adjust the $N_2$ regulator

1. Install one of the following sets of consumables:

   - ☐ 460 A $O_2$/Air
   - ☐ 460 A Mix/$N_2$

- ☐ 300 A $O_2$/Air
- ☐ 300 A $N_2$/$N_2$
- ☐ 300 A Mix/$N_2$
- ☐ 170 A $O_2$/Air
- ☐ 170 A $N_2$/$N_2$
- ☐ 170 A Mix/$N_2$

2. Use the XPR web interface to select one of the following processes:
   - ☐ 2100 for 300 A $N_2$/$N_2$ aluminum or stainless steel
   - ☐ 2057 for 170 A $N_2$/$N_2$ aluminum or stainless steel
3. Remove the cover from the OptiMix gas connect console.
4. Pull up the $N_2$ regulator knob until the orange indicator is visible.

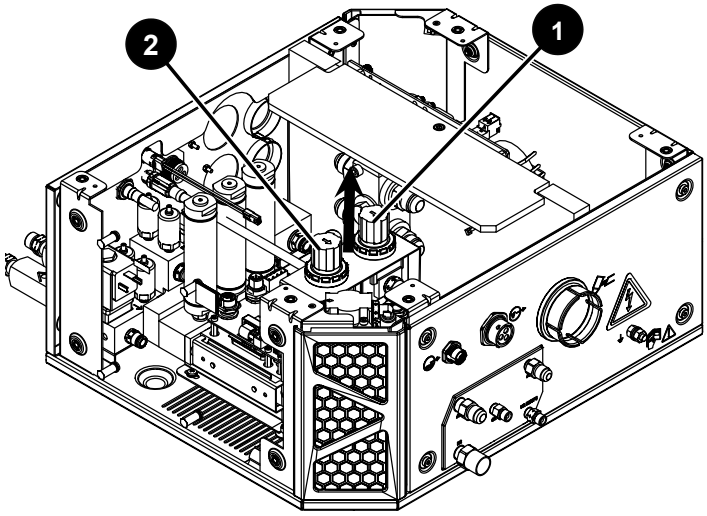


**1** Nitrogen ($N_2$) regulator knob

**2** Argon (Ar) regulator knob

5. Go to **Gas System** in the XPR web interface.

6. Select **TEST PREFLOW**.
7. While the gas flows, adjust the regulator until the shield inlet sensor (P4) on the web interface is 6.9 bar (100 psi).

   Oscillations in the flow rates in the mixer $N_2$ line can occur when the $N_2$ regulator in the gas connect console is set to too high of a pressure to the $N_2$ shield line. Decrease the pressure output of this regulator to decrease the pressure oscillations.

### Corrective action to adjust the Ar regulator

1. Install one of the following sets of consumables:
   - ☐ 460 A $O_2$/Air
   - ☐ 300 A $O_2$/Air
   - ☐ 170 A $O_2$/Air
2. Use the XPR web interface to select one of the following processes:
   - ☐ 2074 for Mix/$N_2$ (Ar pierce assist) stainless steel and aluminum
   - ☐ 1205 for $O_2$/$N_2$ mild steel
   - ☐ 1157 for $O_2$/Air (Ar pierce assist) mild steel
3. Remove the cover for the OptiMix gas connect console.
4. Pull up the Ar regulator knob until the orange indicator is visible.
5. Go to **Gas System** in the XPR web interface.
6. Select **TEST PIERCEFLOW**.
7. While the gas flows, adjust the regulator until the shield inlet sensor (P4) on the web interface is 6.9 bar (100 psi).

## Troubleshooting for pressure transducer faults

### Diagnostic codes 706 – 715

Diagnostic codes 706 – 715 identify a problem with a pressure sensor in the TorchConnect console or the gas connect console.

## Symptoms

| Code | Symptoms | XPR models | XPR action | Code cancels with... |
|---|---|---|---|---|
| **706** | The P1 pressure sensor in the TorchConnect console is not found. | All models | Ramp down | ▪ Set process<br>▪ Remote on-off |
| **707** | The P2 pressure sensor in the TorchConnect console is not found. | | | |
| **708** | The P3 pressure sensor in the TorchConnect console is not found. | | | |
| **709** | The P4 pressure sensor in the TorchConnect console is not found. | | | |
| **710** | The P5 pressure sensor in the TorchConnect console is not found. | | | |
| **711** | The P14 pressure sensor in the TorchConnect console is not found. | | | |
| **712** | The P6 pressure sensor in the gas connect console is not found. | | | |
| **713** | The P7 pressure sensor in the gas connect console is not found. | | | |
| **714** | The P8 pressure sensor in the gas connect console is not found. | | | |
| **715** | The P9 pressure sensor in the gas connect console is not found. | | | |

## Corrective action

1. Remove the power from the cutting system.
2. Examine the pressure transducer for the diagnostic code that you see.

   For example:

   - ☐ If the code shows P1-TCC, examine the P1 pressure transducer in the TorchConnect console.
   - ☐ If the code shows P6-GCC, examine the P6 pressure transducer in the gas connect console.
3. Make sure that the pressure transducer is correctly connected to:

   - ☐ TorchConnect console control PCB
   - ☐ Gas connect console control PCB
4. Install the pressure transducer correctly if you find loose or incorrect connections.

5. If you find damage, replace the control PCB that has damage.
6. Replace the pressure transducer.
7. If you cannot find or correct the problem, speak to your cutting machine supplier or regional Hypertherm Technical Service team.

# Troubleshooting for invalid processes

## Diagnostic code 716

Diagnostic code 716 occurs when there is a problem with the cut process sent to the CNC. There are six different smart-fault data values that you can get with a 716 code. The troubleshooting steps are different for the different values. When you get a 716 code, make sure that you identify the smart-fault value before you send a process change.

For an overview of the troubleshooting process for the 716 code, refer to Troubleshooting flowchart for diagnostic code 716 on page 360.

## Symptoms

| Code | Symptoms | XPR models | XPR action | Code cancels with... |
|---|---|---|---|---|
| **716** | The operator-selected process is not supported by this plasma cutting system.<br><br>There are six smart-fault data values for the 716 code:<br>▪ 1: invalid id<br>▪ 2: invalid user<br>▪ 3: invalid user source<br>▪ 4: invalid process<br>▪ 5: not allowed or system not ready<br>▪ 6: not supported | All models | None | ▪ Set process<br>▪ Remote on-off |

### 1: invalid id

The process ID is equal to zero (0).

Select a process ID for the application. Refer to the *XPR Cut Charts Instruction Manual (809830)*.

### 2: invalid user

Another interface has control of the cutting system.

Only one communication method at a time can send a process ID to the plasma cutting system. The communication methods are:

- Serial
- EtherCAT
- Wireless

### 3: invalid user source

Another interface has control of the cutting system.

Only one wireless interface at a time can send a process ID to the plasma cutting system.

Select or change the interface that has control of the plasma cutting system. Refer to Change the device that has control on page 197.

If the CNC has control and you change control to another device using the **RESET OPERATOR** button in the XPR web interface, you can get a 716 code if you try to send a process from the CNC. If this occurs, select **RESET OPERATOR** again on the same device as before to give control back to the CNC. In some conditions, it can also be necessary to set the line-disconnect switch to OFF and then back to ON.

### 4: invalid process

An incorrect process ID was sent.

Select the correct process ID for the application. Refer to the *XPR Cut Charts Instruction Manual (809830)*.

### 5: not allowed or system not ready

The cutting system is not prepared for a new process ID. It can only accept a process ID during the following states:

- Initial Checks state (2)
- Inert Gas Purge state (4)
- Wait for Start state (5)
- Manual Leak Test state (20)
- End of Cycle state (14)

1. Wait until gas purge is complete or until cutting is complete.

   The plasma cutting system cannot accept a new process ID during gas purge or cutting.

2. If you cannot find or correct the problem, speak to your cutting machine supplier or regional Hypertherm Technical Service team.

### 6: not supported

The different gas connect consoles have different capabilities. For example, argon assist and argon marking for mild steel are available for cutting systems installed with OptiMix, VWI, or CorePlus gas connect consoles, but not with Core.

Select a process that aligns with the gas connect console and the type of cutting that you are trying to do. Refer to:

- Process selection on page 231
- Cut charts on page 232

## Troubleshooting flowchart for diagnostic code 716

Refer to these flowcharts for an overview of the troubleshooting process for the 716 diagnostic code.

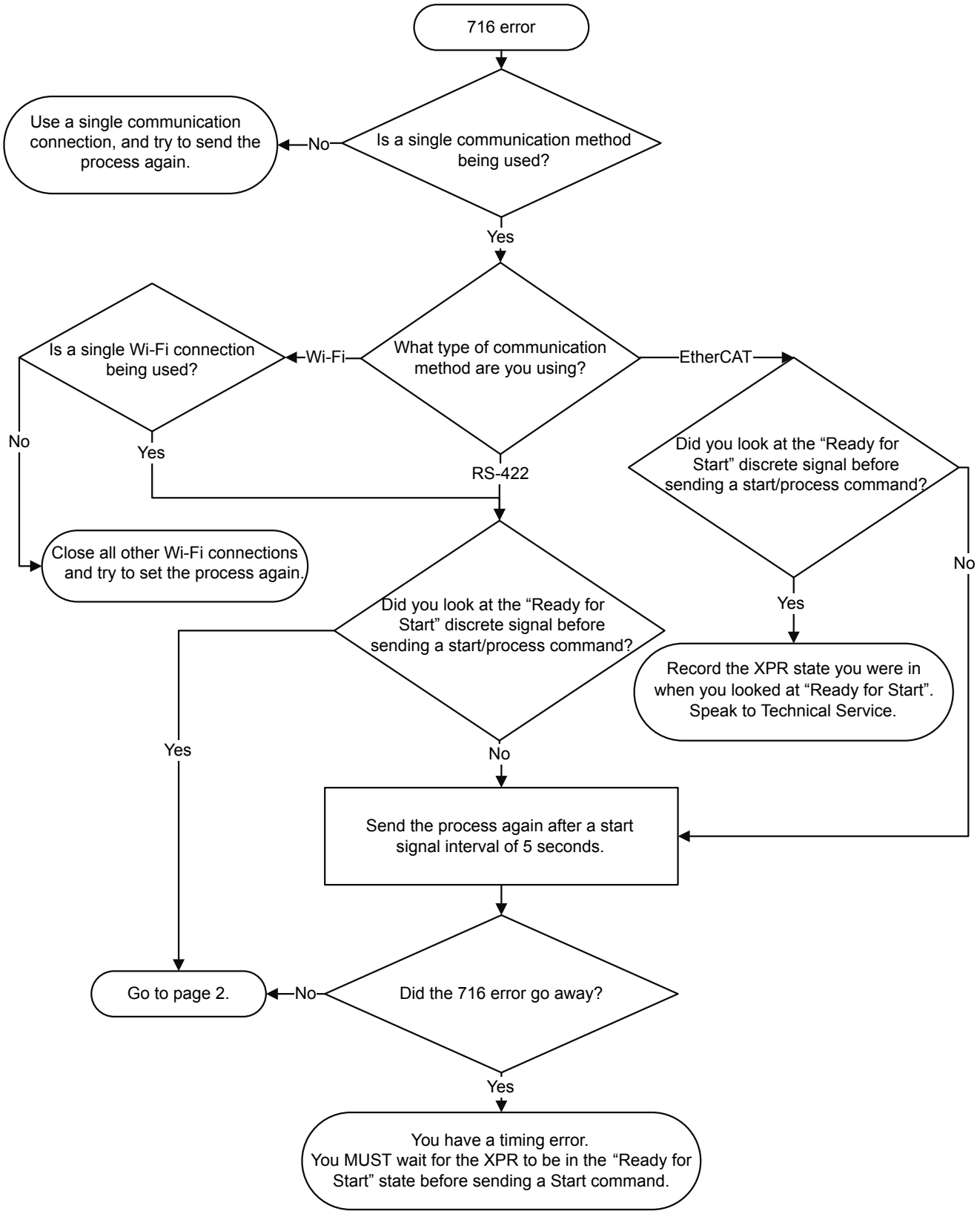
716 error
Is a single communication method being used?
No
Use a single communication connection, and try to send the process again.
Yes
What type of communication method are you using?
Wi-Fi
Is a single Wi-Fi connection being used?
No
Yes
Close all other Wi-Fi connections and try to set the process again.
RS-422
Did you look at the "Ready for Start" discrete signal before sending a start/process command?
Yes
No
Record the XPR state you were in when you looked at "Ready for Start". Speak to Technical Service.
EtherCAT
Did you look at the "Ready for Start" discrete signal before sending a start/process command?
Yes
No
Send the process again after a start signal interval of 5 seconds.
Did the 716 error go away?
No
Go to page 2.
Yes
You have a timing error.
You MUST wait for the XPR to be in the "Ready for Start" state before sending a Start command.

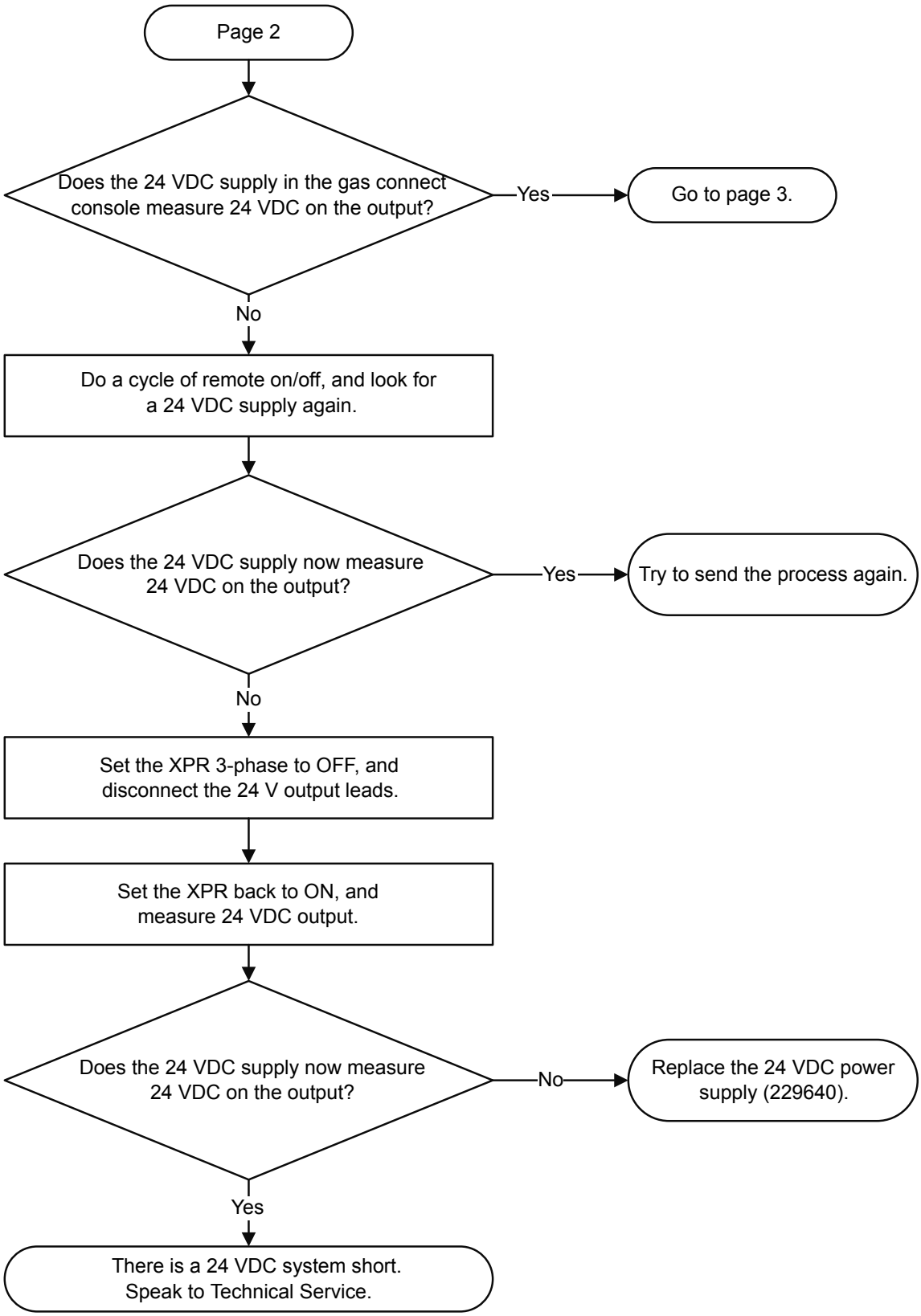
Page 2
Does the 24 VDC supply in the gas connect console measure 24 VDC on the output?
Yes
Go to page 3.
No
Do a cycle of remote on/off, and look for a 24 VDC supply again.
Does the 24 VDC supply now measure 24 VDC on the output?
Yes
Try to send the process again.
No
Set the XPR 3-phase to OFF, and disconnect the 24 V output leads.
Set the XPR back to ON, and measure 24 VDC output.
Does the 24 VDC supply now measure 24 VDC on the output?
No
Replace the 24 VDC power supply (229640).
Yes
There is a 24 VDC system short. Speak to Technical Service.

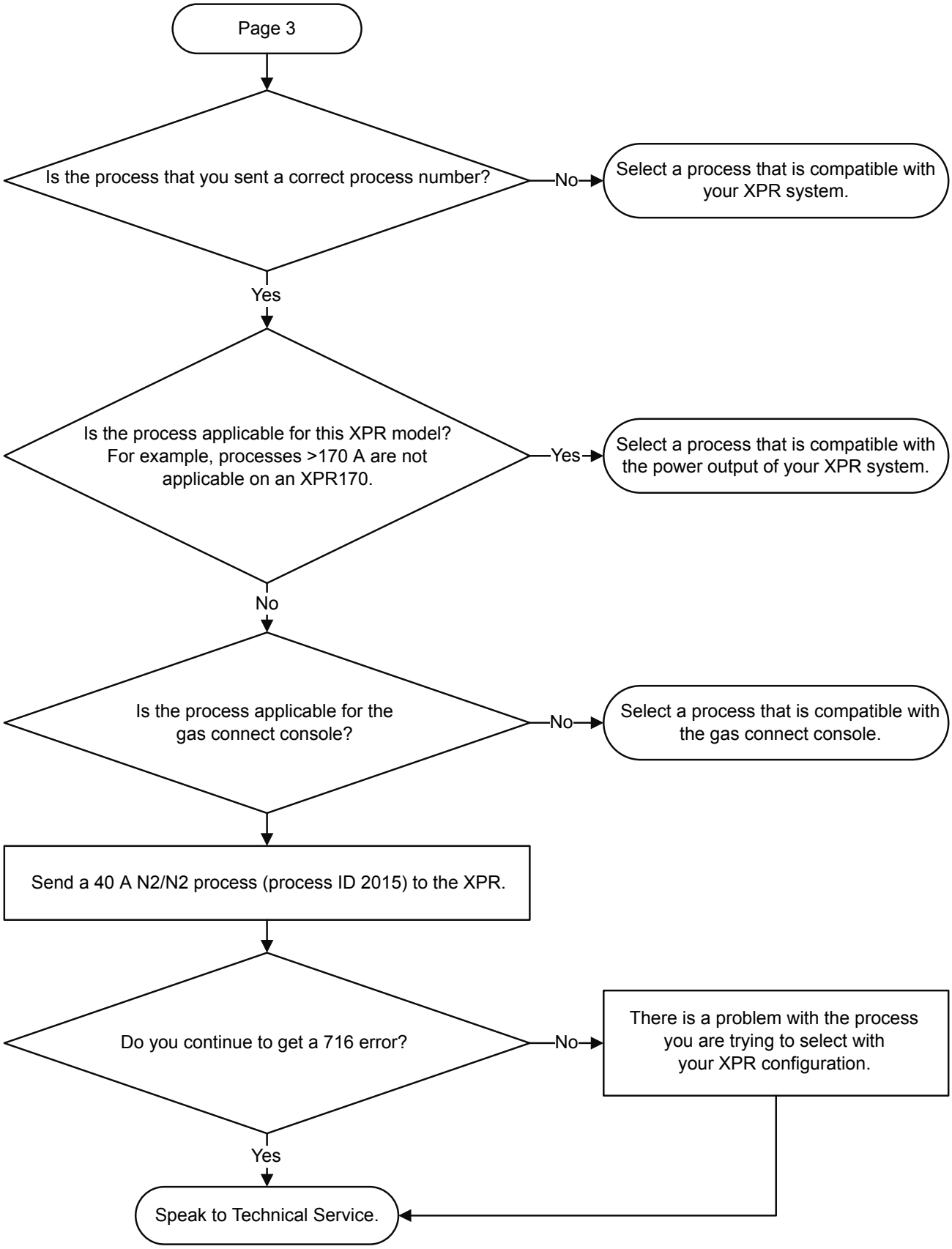
Page 3
Is the process that you sent a correct process number?
No
Select a process that is compatible with your XPR system.
Yes
Is the process applicable for this XPR model? For example, processes >170 A are not applicable on an XPR170.
Yes
Select a process that is compatible with the power output of your XPR system.
No
Is the process applicable for the gas connect console?
No
Select a process that is compatible with the gas connect console.
Send a 40 A N2/N2 process (process ID 2015) to the XPR.
Do you continue to get a 716 error?
No
There is a problem with the process you are trying to select with your XPR configuration.
Yes
Speak to Technical Service.

# Troubleshooting for duty cycle limit on proportional valve supply voltage

## Diagnostic code 719

This code occurs when a proportional valve supply voltage for some gases is at maximum duty cycle.

## Symptoms

| Code | Symptoms | XPR models | XPR action | Code cancels with... |
|---|---|---|---|---|
| **719** | The $H_2$, Ar, or $N_2$ proportional valve supply voltage is at 100% duty cycle. Total flow is decreased to keep the mix percentage of the other gases accurate.<br><br>Because the mixer tries to supply a flow, the outlet pressure can continue to increase. | All models | None | ▪ Start process<br>▪ Set process<br>▪ Remote on-off |

## Corrective action

1. Make sure that the consumables are correct.
2. Make sure that the inlet pressures for $N_2$, Ar, and $H_2$ are consistently in the permitted range.
3. Make sure that you have the most recent XPR firmware.

   You can log into the Xnet at www.hypertherm.com to download it.

# Troubleshooting for pressure out is greater than pressure in

## Diagnostic code 720

Diagnostic code 720 occurs when the output pressure is more than the input pressure on the mixer.

### Symptoms

| Code | Symptoms | XPR models | XPR action | Code cancels with... |
|---|---|---|---|---|
| **720** | Pressure out (P21) is more than one of the pressures on the inlet side of the mixer (P10 – P12) by 0.069 bar (1 psi) or more.<br>When this occurs, the mixer decreases flow to prevent backflow, which can have an effect on cut quality. | All models | None | ▪ Start process<br>▪ Set process<br>▪ Remote on-off |

### Corrective action

1. Make sure that the consumables are correct.
2. Make sure that the supply gas pressure is sufficient.
3. Make sure that there is a sufficient quantity of gas in the gas cylinders, if necessary.
4. Increase the $N_2$, Ar, and $H_2$ pressure during test cutflow to be in the permitted range.
5. Make sure that you have the most recent XPR firmware.

   You can log into the Xnet at www.hypertherm.com to download it.

## Troubleshooting for gas mixture faults

### Diagnostic codes 721 – 723, 726

Diagnostic codes 721–723 and 726 occur when there is a gas mixture failure.

### Symptoms

| Code | Symptoms | XPR models | XPR action | Code cancels with... |
|---|---|---|---|---|
| **721** | There was a failure of the mixing parameter checksum. | All models | Ramp down | ▪ Set process<br>▪ Remote on-off |
| **722** | There was a failure of the mixing flow calibration. | | | |
| **723** | There was a failure of the mixing pressure calibration. | | | |
| **726** | There is a problem with the mixing system clock. | | | |

### Corrective action

1. Use the remote on-off switch to set the cutting system to OFF.
2. Use the remote on-off switch to set the cutting system back to ON.
3. Make sure that all of the wire harness connections for the gas mixer module are correct and are fully tightened.
4. If the diagnostic code continues:
   a. Replace the gas mixer module.

      Refer to VWI and OptiMix gas connect console mixer, resonators, transducers, and valves on page 412.

   b. If a new gas mixer module does not repair the problem, replace the gas connect console.

## Troubleshooting for gas mixture communication errors

### Diagnostic codes 724, 725, 742, 743

Diagnostic codes 724, 725, 742, and 743 occur when there is gas mixing communication error.

### Symptoms

| Code | Symptoms | XPR models | XPR action | Code cancels with... |
|---|---|---|---|---|
| **724** | There is a mixing communication error on I2C1. | All models | Ramp down | ▪ Set process<br>▪ Remote on-off |
| **725** | There is a mixing communication error on I2C2. | | | |
| **742** | There is a mixing alert for I2C1. | All models | None | |
| **743** | There is a mixing alert for I2C2. | | | |

### Corrective action

1. Examine the cable that is used to connect the gas connect console to ground:
   a. Connect the cable if it is loose or not connected.
   b. Repair or replace the cable if it has damage.
2. Make sure that there is no damage to the ribbon cables that connect the gas mixer control PCB to the flow meters.
3. Make sure that all external panels for all system components are in position and installed correctly.

4. Make sure that all hardware that holds the external panels is in position and is fully tightened.
5. If the diagnostic code continues, replace the gas mixer module.

   Refer to VWI and OptiMix gas connect console mixer, resonators, transducers, and valves on page 412.

# Troubleshooting for solenoid valve V1 in the TorchConnect console

## Diagnostic code 730

This code occurs when there is a fault condition for valve V1 in the TorchConnect console.

## Symptoms

| Code | Symptoms | XPR models | XPR action | Code cancels with... |
|---|---|---|---|---|
| **730** | There is a fault condition for receptacle valve V1 at the PCB in the TorchConnect console. | All models | Ramp down | ▪ Set process<br>▪ Remote on-off |

## Corrective action

1. Examine the valve driver cable connections for the valve receptacle in the TorchConnect console.
2. Replace the V1 valve if you find damage or excess wear.
3. If the code continues, examine the leads, and make sure that the continuity in the leads is good.
4. If the continuity is good and the code continues, replace the control PCB in the TorchConnect console.

# Troubleshooting for solenoid valves V4 – V12 in the TorchConnect console

## Diagnostic codes 733 – 741

Diagnostic codes 733 – 741 occur when there is an overcurrent condition for one or more of the V4 – V12 valves in the TorchConnect console.

### Symptoms

| Code | Symptoms | XPR models | XPR action | Code cancels with... |
|---|---|---|---|---|
| **733** | There is an overcurrent condition for valve V4 at the PCB in the TorchConnect console. | All models | Ramp down | ▪ Set process<br>▪ Remote on-off |
| **734** | There is an overcurrent condition for valve V5 at the PCB in the TorchConnect console. | | | |
| **735** | There is an overcurrent condition for valve V6 at the PCB in the TorchConnect console. | | | |
| **736** | There is an overcurrent condition for valve V7 at the PCB in the TorchConnect console. | | | |
| **737** | There is an overcurrent condition for valve V8 at the PCB in the TorchConnect console. | | | |
| **738** | There is an overcurrent condition for valve V9 at the PCB in the TorchConnect console. | | | |
| **739** | There is an overcurrent condition for valve V10 at the PCB in the TorchConnect console. | | | |
| **740** | There is an overcurrent condition for valve V11 at the PCB in the TorchConnect console. | | | |
| **741** | There is an overcurrent condition for valve V12 at the PCB in the TorchConnect console. | | | |

### Corrective action

1. Examine the wiring for the valve.
2. Connect the valve wire to another valve.

   If the diagnostic code goes away, the valve is bad.
3. Replace the bad valve.
4. If the code continues, examine the leads, and make sure that the continuity in the leads is good.
5. If the continuity is good and the code continues, replace the control PCB in the TorchConnect console.

## Fan diagnostic codes diagram

Each fan is related to a different diagnostic code.

**Figure 68 -** Diagnostic code for each plasma power supply fan

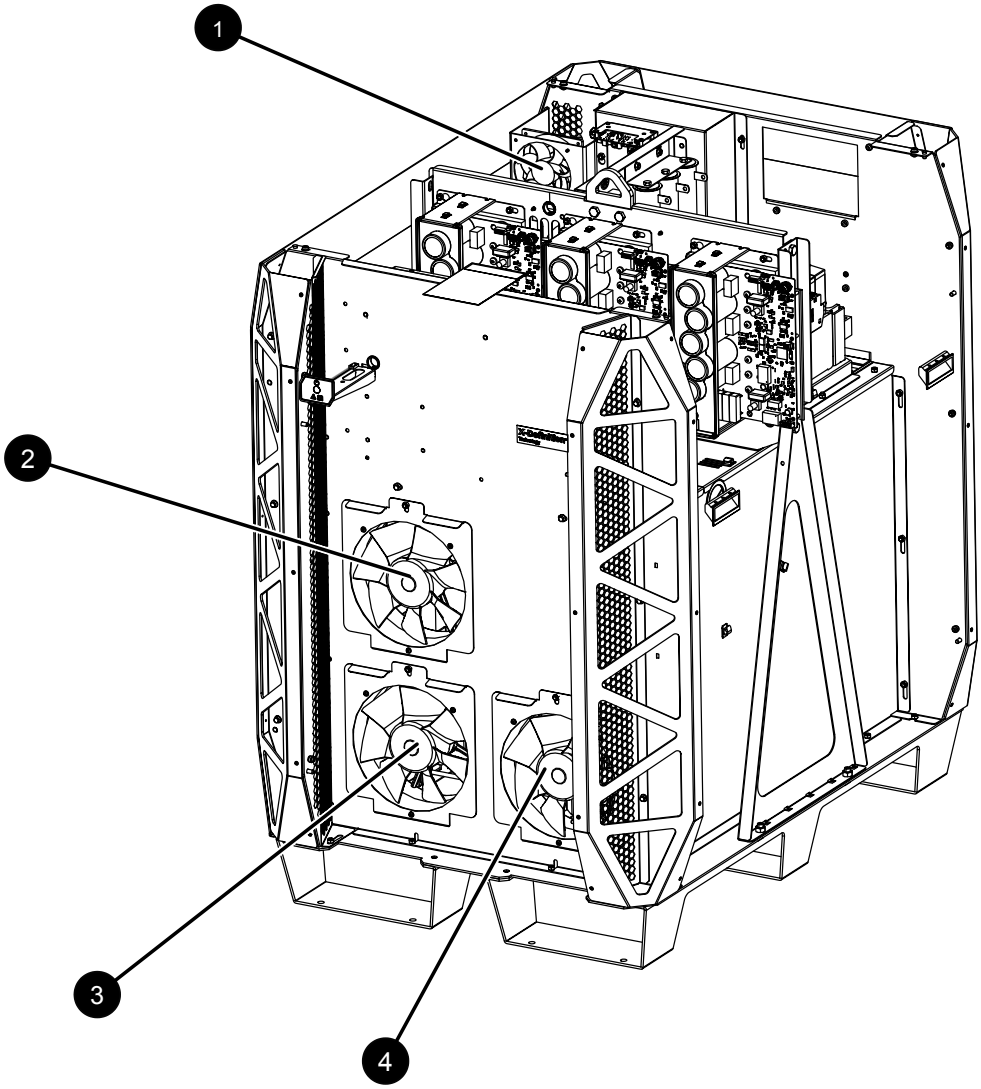


| | Diagnostic code | Fan |
|---|---|---|
| **1** | 747 | CAB FAN 1 |
| **2** | 744 | MAGFAN 1 |
| **3** | 745 | MAGFAN 2 |
| **4** | 746 | MAGFAN 3 |

**Figure 69 -** Diagnostic code for each cooler fan

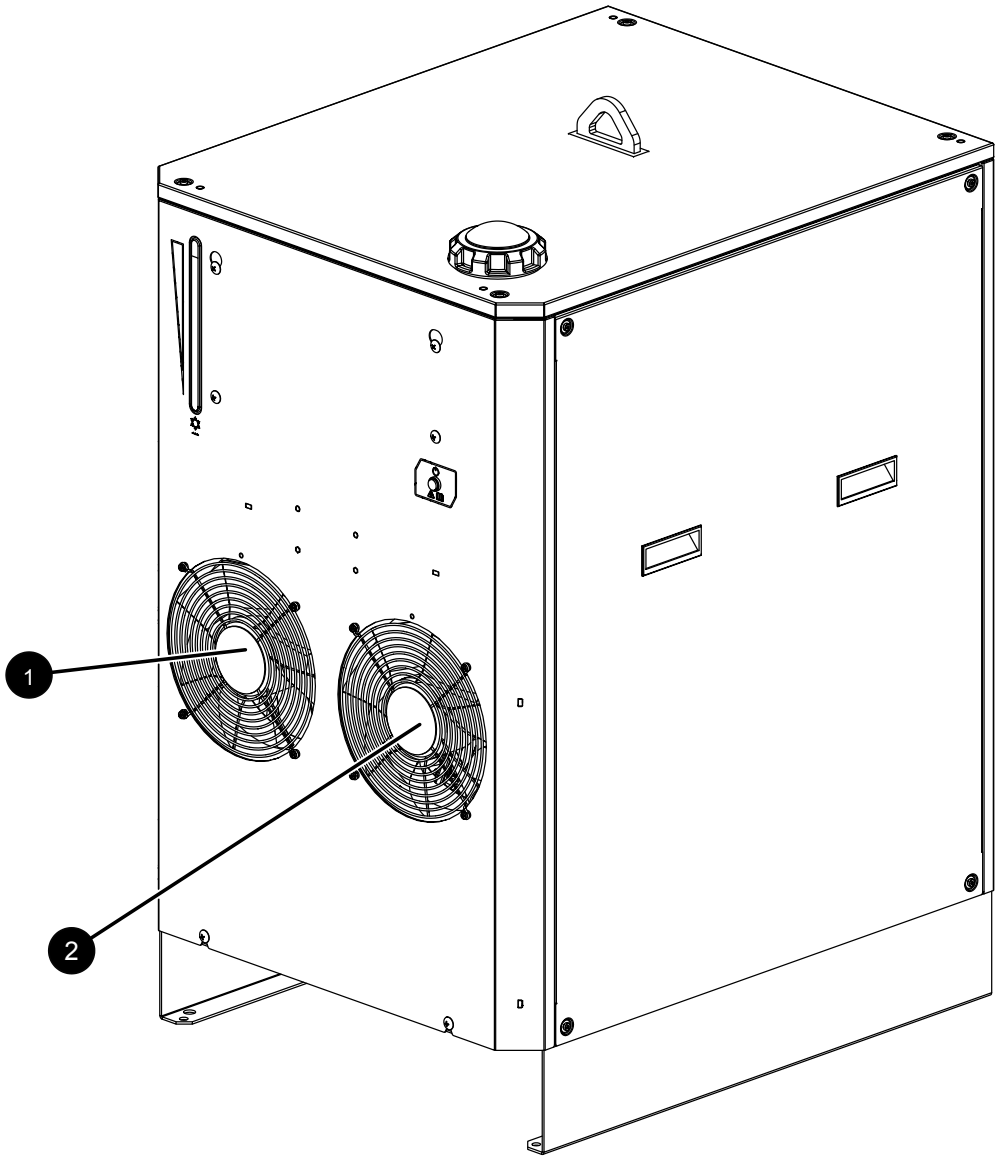


| | Diagnostic code | Fan |
|---|---|---|
| **1** | 748 | HXFAN 1 |
| **2** | 749 | HXFAN 2 |

# Troubleshooting for low fan speeds – MAGFAN

## Diagnostic codes 744 – 746

Diagnostic codes 744 – 746 occur when a magnetics fan is under performing.

## Symptoms

| Code | Symptoms | XPR models | XPR action | Code cancels with... |
|---|---|---|---|---|
| **744** | The fan tachometer feedback for MAGFAN 1 is less than the minimum acceptable value. | All models | None | ▪ Set process<br>▪ Remote on-off |
| **745** | The fan tachometer feedback for MAGFAN 2 is less than the minimum acceptable value. | All models | None | |
| **746** | The fan tachometer feedback for MAGFAN 3 is less than the minimum acceptable value. | XPR460 | None | |

## Corrective action

1. Use the Fan diagnostic codes diagram on page 368 to identify the location of the MAGFAN in the plasma power supply.
2. Make sure that the following fan connections are good, and tighten loose connections if found:
   a. The fan connector
   b. The wiring to J2, J3, and J5 on the fan power distribution PCB
   c. The wiring to J7 on the control PCB
3. Examine the 48 VDC power source output.
4. If the power output is not correct, replace the 48 VDC power source.
5. Examine the solid-state relay, and make sure that it is operating correctly.
6. If you do not find any loose connections and the 48 VDC power source and solid-state relay are good, replace the fan.

# Troubleshooting for low fan speeds – HXFAN

## Diagnostic codes 748 and 749

Diagnostic codes 748 and 749 occur when a heat exchanger fan is under performing.

For XPR170 and XPR300, the heat exchanger fans are in the plasma power supply. For XPR460, the heat exchanger fans are in the cooler.

### Symptoms

| Code | Symptoms | XPR models | XPR action | Code cancels with... |
|---|---|---|---|---|
| **748** | The fan tachometer feedback for HXFAN 1 is less than the minimum acceptable value. | All models | None | ▪ Set process<br>▪ Remote on-off |
| **749** | The fan tachometer feedback for HXFAN 2 is less than the minimum acceptable value. | XPR300, XPR460 | | |

### Corrective action

1. Use the Fan diagnostic codes diagram on page 368 to identify the location of the HXFAN in the cooler.
2. Make sure that the following fan connections are good, and tighten loose connections if found:
   a. The fan connector
   b. The wiring to J2 on the cooler fan power distribution PCB (PCB 3 in the cooler)
   c. The wiring to J3.3 (HXFAN 1) and J4 (HXFAN 2) on the cooler fan power distribution PCB (PCB 3 in the cooler)
   d. The wiring to J5 on the cooler control PCB (PCB 2 in the cooler)
3. Examine the power output of the 48 VDC power source that is in the cooler.
4. If the power output is not correct, replace the 48 VDC power source.
5. Examine the solid-state relay, and make sure that it is operating correctly.
6. If you do not find any loose connections and the 48 VDC power source and solid-state relay are good, replace the fan.

## Troubleshooting for low fan speeds – CAB FAN 1

### Diagnostic codes 747 and 750

Diagnostic codes 747 and 750 occur when the CAB FAN 1 fan is under performing.

### Symptoms

| Code | Symptoms | XPR models | XPR action | Code cancels with... |
|---|---|---|---|---|
| **747** | The fan speed for CAB FAN 1 is less than the minimum acceptable Revolutions Per Minute (RPM) value. | XPR460 | None | ▪ Set process<br>▪ Remote on-off |
| **750** | The fan speed for CAB FAN 1 is less than the minimum acceptable RPM value. | XPR170, XPR300 | | |

### Corrective action

1. Use the Fan diagnostic codes diagram on page 368 to identify the location of CAB FAN 1 in the plasma power supply.
2. Make sure that the following fan connections are good, and tighten loose connections if found:
   a. The fan connector
   b. The wiring to J7 on the fan power distribution PCB
   c. The wiring to J7 on the control PCB
3. Tighten loose connections if found.
4. Examine the 48 VDC power source output.
5. If the power output is not correct, replace the 48 VDC power source.
6. If you do not find any loose connections and the 48 VDC power source is good, replace the fan.

## Troubleshooting for phase errors in choppers

### Diagnostic codes 752, 753, 754

Diagnostic codes 752 – 754 occur when there is a 3-phase error in a chopper.

### Symptoms

| Code | Symptoms | XPR models | XPR action | Code cancels with... |
|---|---|---|---|---|
| **752** | There is a 3-phase error in Chopper 1. | All models | Shut down | Remote on-off |
| **753** | There is a 3-phase error in Chopper 2. | XPR300, XPR460 | | |
| **754** | There is a 3-phase error in Chopper 3. | XPR460 | | |

### Corrective action

1. Make sure that the input-line voltage is ±14% of nominal.

   Refer to General input power requirements on page 44.

2. Remove the power from the cutting system.
3. Remove the cover from the contactor.
4. Examine the contacts for excess wear, and replace the contactor if necessary.
5. Examine the following contactor components for loose connections:
   a. Contactor
   b. Input to chopper
   c. Power cord
6. Tighten loose connections if found.
7. If you cannot find or correct the problem, speak to your cutting machine supplier or regional Hypertherm Technical Service team.

## Troubleshooting for a main contactor fault

### Diagnostic code 764

Diagnostic code 764 occurs when the current for the main contactor is too high.

### Symptoms

| Code | Symptoms | XPR models | XPR action | Code cancels with... |
|---|---|---|---|---|
| **764** | The main contactor driver finds an overcurrent condition. | All models | None | ▪ Set process<br>▪ Remote on-off |

### Corrective action

1. Examine the main contactor and wiring, and replace them if you find damage or excess wear.
2. Make sure that you have the most recent XPR firmware.

   You can log in into the Xnet at www.hypertherm.com to download it.

3. If you cannot find or correct the problem, speak to your cutting machine supplier or regional Hypertherm Technical Service team.

# Troubleshooting for an inrush contactor fault

## Diagnostic code 765

Diagnostic code 765 occurs when the current at the inrush contactor is too high.

## Symptoms

| Code | Symptoms | XPR models | XPR action | Code cancels with... |
|---|---|---|---|---|
| **765** | The inrush contactor driver finds an overcurrent condition. | XPR300, XPR460 | None | ▪ Set process<br>▪ Remove on-off |

## Corrective action

1. Examine the inrush contactor, the inrush contactor relay, and the wiring.
2. Replace components that have damage or excess wear.
3. Make sure that you have the most recent XPR firmware.

   You can log in into the Xnet at www.hypertherm.com to download it.
4. If you cannot find or correct the problem, speak to your cutting machine supplier or regional Hypertherm Technical Service team.

# Troubleshooting for a pump-enable fault or remote-relay fault

## Diagnostic codes 766, 767

Diagnostic codes 766 and 767 occur when there is a fault that is related to the pump solid-state relay.

## Symptoms

| Code | Symptoms | XPR models | XPR action | Code cancels with... |
|---|---|---|---|---|
| **766** | The pump-enable driver finds an overcurrent condition. | All models | None | ▪ Set process<br>▪ Remote on-off |
| **767** | The remote on-off relay driver finds an overcurrent condition. | | | |

### Corrective action

1. Examine the pump solid-state relay for damage.
2. Replace components if you find damage or excess wear.
3. Make sure that you have the most recent XPR firmware.

   You can log in into the Xnet at www.hypertherm.com to download it.
4. If you cannot find or correct the problem, speak to your cutting machine supplier or regional Hypertherm Technical Service team.

## Troubleshooting for gas inlet pressure faults

### Diagnostic codes 768 – 771

Diagnostic codes 768 – 771 occur when gas inlet pressure is less than the permitted pressure level.

**Use extreme caution if you do diagnosis or maintenance tasks when the plasma power supply is connected to electricity and the panels on the plasma power supply are removed.**

Decreases in gas pressure are more likely to occur if the supply gas hoses are long. For more information, refer to:

- Configuration with Core gas connect consoles on page 87
- Configuration with CorePlus gas connect consoles on page 89
- Configuration with VWI or OptiMix gas connect consoles on page 90

### Symptoms

| Code | Symptoms | XPR models | XPR action | Code cancels with... |
|---|---|---|---|---|
| **768** | Line A $O_2$ inlet pressure (P2) is less than 5.52 bar (80 psi) or more than 8.62 bar (125 psi). | All models | None | ▪ Set process<br>▪ Remote on-off |
| **769** | Line B Argon inlet pressure (P1) is less than 5.52 bar (80 psi) or more than 8.62 bar (125 psi). | | | |
| **770** | Line B $N_2$ inlet pressure (P1) is less than 5.52 bar (80 psi) or more than 8.62 bar (125 psi). | | | |
| **771** | Line A Air inlet pressure (P2) is less than 5.52 bar (80 psi) or more than 8.62 bar (125 psi). | | | |

### Corrective action

1. Use the CNC or XPR web interface to select **Test Cutflow** to start the gas flow.
2. Make sure that the gas inlet pressures are in the permitted range.

   Refer to Process-gas requirements for all gas connect consoles on page 48.
3. If the gas inlet pressure is not in the permitted range, adjust it.
   a. Use a 2-stage regulator that can supply the necessary gas flow and can keep consistent gas pressure with high-pressure gas cylinders.
   b. Look at the diagnostic code history for pressure-related codes that can identify where to look for flow or pressure problems.
   c. If you identify a code for a pressure transducer (P1 or P2), interchange the transducers.
   d. Identify if the diagnostic code aligns with the transducer change.
   e. Replace the bad transducer if necessary.

      For instructions, refer to "Replace a pressure transducer" in the *XPR Replacement Parts Procedures Field Service Bulletin (809970)*.
4. If your cutting system has an OptiMix gas connect console, refer to Troubleshooting for process-gas inlet pressure faults in the TorchConnect console for OptiMix systems on page 354.
5. If you cannot find or correct the problem, speak to your cutting machine supplier or regional Hypertherm Technical Service team.

## Troubleshooting for a pilot relay fault

### Diagnostic code 777

Diagnostic code 777 occurs when there is a fault related to the pilot relay.

### Symptoms

| Code | Symptoms | XPR models | XPR action | Code cancels with... |
|---|---|---|---|---|
| **777** | The pilot-relay driver finds an overcurrent condition. | All models | None | ▪ Set process<br>▪ Remote on-off |

## Safety consideration for the XPR460

For this procedure, make sure that you use the pilot-arc relay, NOT the cooler-power relay. When at least one remote on-off switch is set to OFF (disabled), 220 VAC electric power stays ON (active) to the input side of the cooler-power relay.

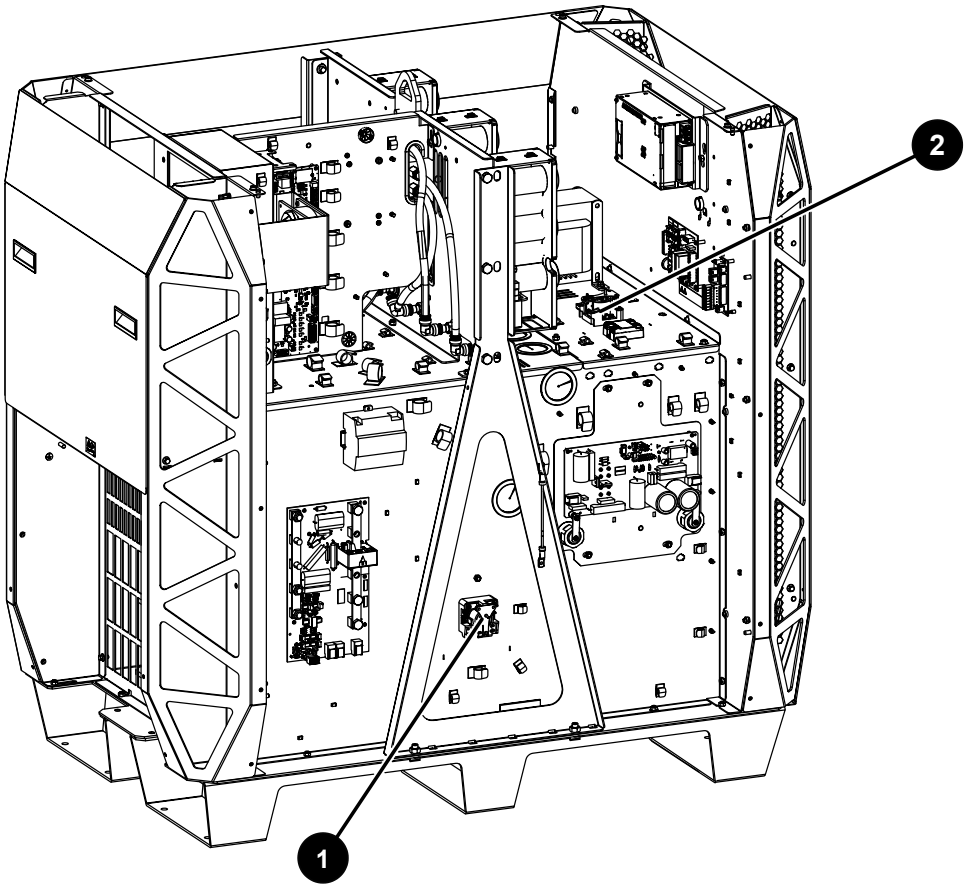


**1** Pilot-arc relay

**2** Cooler-power relay

## Corrective action

1. Remove the power from the cutting system.
2. Remove the control-side panel from the plasma power supply.
3. Examine the control PCB (PCB 1) in the plasma power supply.
4. Disconnect J6 from the control PCB.
5. Remove the cover from the pilot-arc relay.
6. Use an ohmmeter to measure the coil resistance across wire 21 and wire 22.

Look for a resistance of approximately 280 ohms (Ω).

7. If the ohms value is more than 10% higher or lower than 280 ohms (Ω), replace the pilot-arc relay.
8. If the ohms value is in the permitted range, make sure that you have the most recent XPR firmware.

   You can log in into the Xnet at www.hypertherm.com to download it.

# Troubleshooting for high or low chopper voltage

## Diagnostic codes 779, 780, 781

Diagnostic codes 779 – 781 occur when the chopper voltage is not in the permitted voltage range.

## Symptoms

| Code | Symptoms | XPR models | XPR action | Code cancels with... |
|---|---|---|---|---|
| **779** | The Chopper 1 15 V bus is out of range (less than 13 V or more than 17 V). | All models | None | ▪ Start process<br>▪ Set process<br>▪ Remote on-off |
| **780** | The Chopper 2 15 V bus is out of range (less than 13 V or more than 17 V). | XPR300, XPR460 | | |
| **781** | The Chopper 3 15 V bus is out of range (less than 13 V or more than 17 V). | XPR460 | | |

## Corrective action

1. Examine the 24 VDC on connector J2, pin 1 and pin 2 for the chopper that gives the diagnostic code.
2. If there is no 24 VDC, examine the J2 wiring on the chopper.
3. Tighten loose connections, if found.
4. If you measure 24 VDC, replace the chopper assembly.

# Troubleshooting for high voltage on the 24 V power supply

## Diagnostic code 784

Diagnostic code 784 occurs when the voltage on the 24 V internal power supply component is too high.

## Symptoms

| Code | Symptoms | XPR models | XPR action | Code cancels with... |
|---|---|---|---|---|
| **784** | The 24 VDC bus is more than 28 V. | All models | Ramp down | None |

## Corrective action

1. Remove the control-side panel from the plasma power supply to get access to the 24 VDC power supply component.
2. Use a digital multimeter to measure for 24 VDC (±2 VDC) across the positive (+) and negative (-) terminals of the power source.
3. If the voltage is more than or less than the ±2 VDC limit, replace the 24 VDC power supply.
4. If there is 24 VDC (±2 VDC) across the positive (+) and negative (-) terminals of the power supply and the 784 diagnostic code continues, look for 24 VDC (±2 VDC) on the control PCB, J1 pin 1 and pin 3.
5. If there is no voltage on J1 pin 1 and pin 3, examine the red and white wires.
6. If the wires are good, replace the control PCB in the plasma power supply.

# PCB information

## Plasma power supply power distribution PCB (141577) diagram

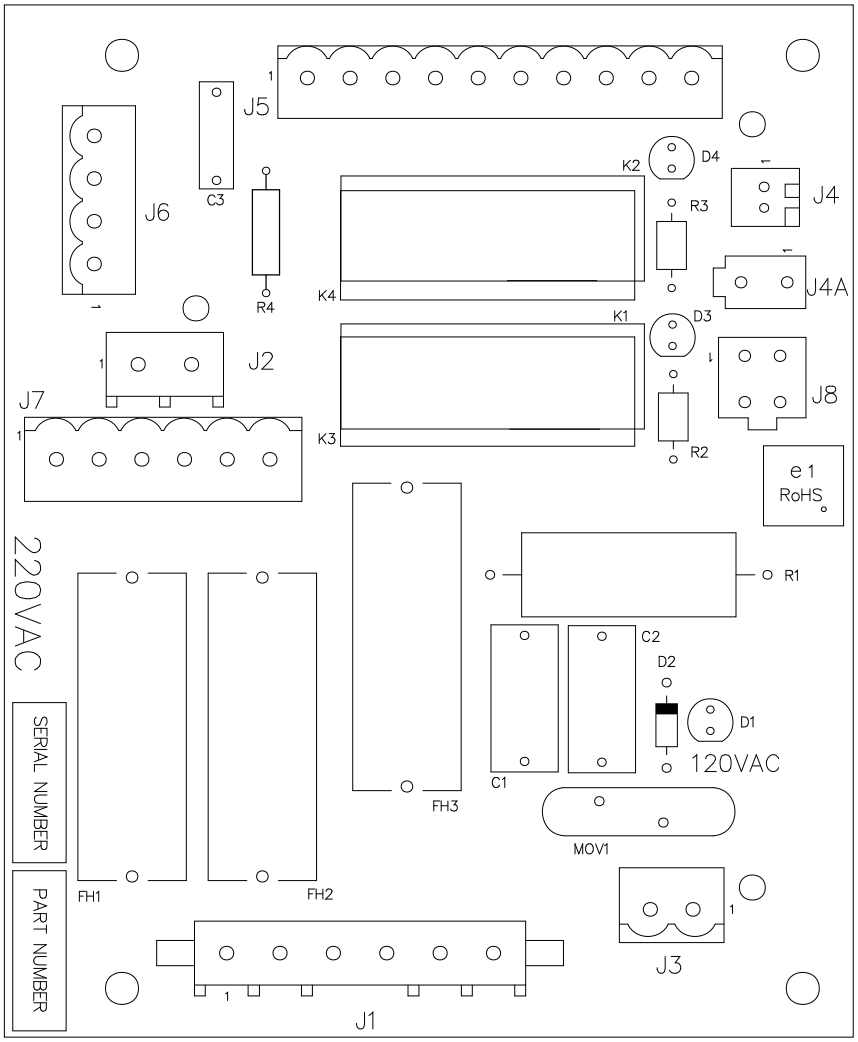


| LED | Signal |
|---|---|
| D1 | 120 VAC |

# Plasma power supply control PCB (141545) diagram

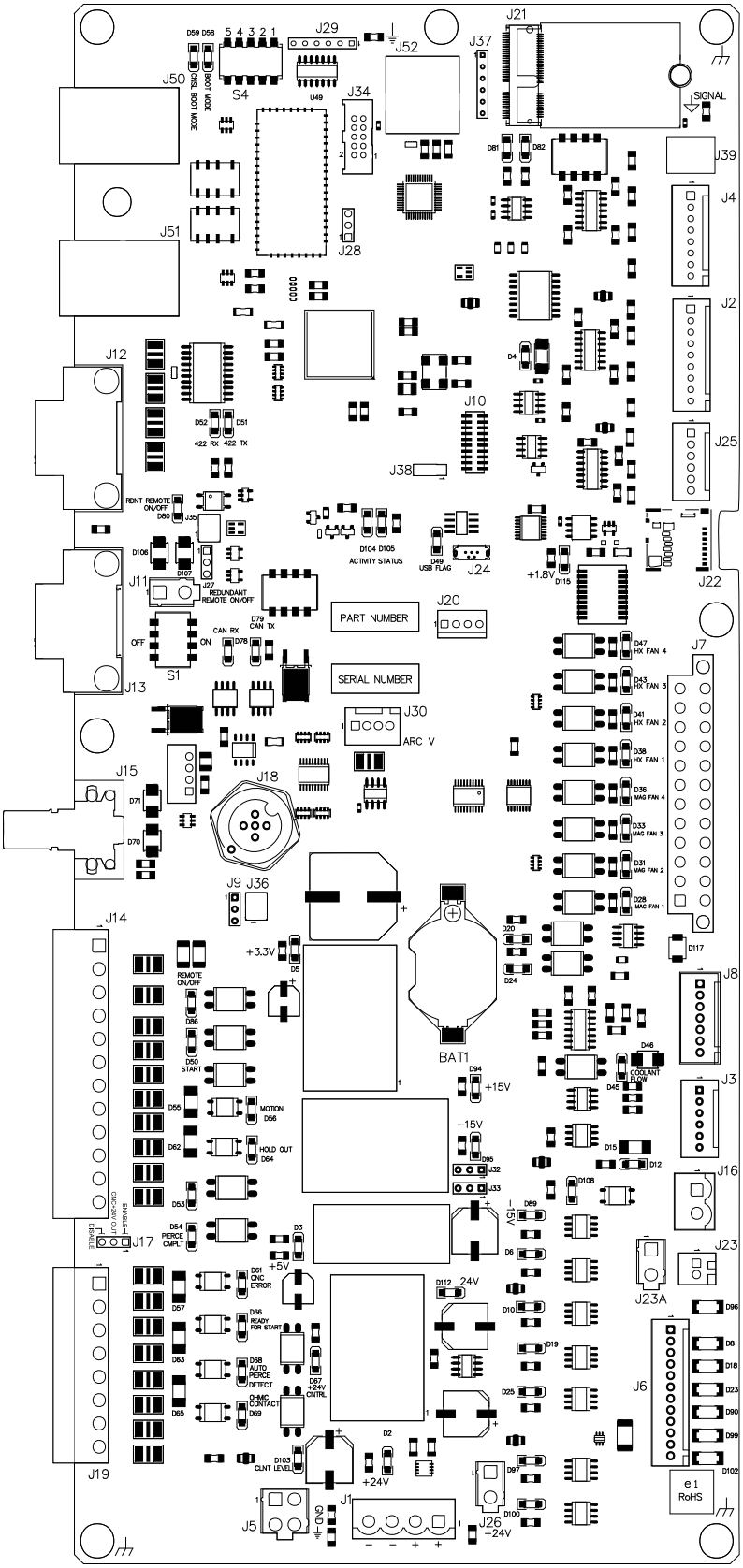

| LED | Signal | LED | Signal |
|---|---|---|---|
| D84 | WiFi LED 1 | D50 | PLASMA START |
| D85 | WiFi LED 2 | D56 | MOTION |
| D82 | WiFi RX | D64 | COMMAND HOLD |
| D81 | WiFi TX | D53 | HOLD IN |
| D80 | REDUNDANT REMOTE ON/OFF | D54 | SHIELD PIERCE GAS |
| D52 | RS-422 RX | D61 | CNC ERROR |
| D51 | RS-422 TX | D66 | NOT READY FOR START |
| D4 | A3.3 V | D68 | AUTO PIERCE DETECT |
| D49 | USB FLAG | D69 | OHMIC CONTACT OUTPUT |
| D104 | STATUS | D15 | SURGE INJ EN (UNUSED IN THIS SYSTEM) |
| D105 | ACTIVITY | D108 | PILOT ARC ENABLE |
| D78 | CAN RX | D89 | REMOTE ON-OFF RELAY ENABLE |
| D79 | CAN TX | D6 | PILOT ARC RELAY |
| D33 | MAGFAN 3 FEEDBACK | D10 | 48 V POWER ENABLE |
| D31 | MAGFAN 2 FEEDBACK | D19 | MAIN CONTACTOR |
| D28 | MAGFAN 1 FEEDBACK | D25 | INRUSH CONTACTOR |
| D5 | +3.3 V | D100 | COOLER ENABLE |
| D20 | MAGNETICS FANS ENABLE | D94 | +15 V |
| D86 | REMOTE ON-OFF | D95 | -15 V |
| D2 | +24 V | D3 | +5 V |

## DIP switch positions

These DIP switch position details are for the control PCB in the plasma power supply.

| DIP switch 1 positions | | | |
|---|---|---|---|
| **1** | RS-422 RX termination | – | Default is ON |
| **2** | RS-422 TX termination | – | Default is OFF |
| **3** | Not used | – | Default is OFF |
| **4** | CAN termination resistor | ▪ ON = 121 ohms (Ω)<br>▪ OFF = Open | Default is OFF |

| DIP switch 2 positions | | | |
|---|---|---|---|
| **1** | Micro-controller DFU programming mode | ▪ ON = DFU<br>▪ OFF = Run | Default is OFF |
| **2** | 3.3 V logic power | ▪ ON = USB OTG<br>▪ OFF = Internal power supply | Default is OFF |
| **3** | RS-422 Serial ID0 | – | Default is OFF |
| **4** | RS-422 Serial ID1 | – | Default is OFF |

| DIP switch 3 positions | | | |
|---|---|---|---|
| **1** | Wireless module programming | ▪ ON = Enabled<br>▪ OFF = Disabled | Default is OFF |
| **2** | Wireless module transmit | ▪ ON = From micro-controller<br>▪ OFF = Disabled (must be OFF for J20 programming) | Default is ON |
| **3** | Wireless module transmit | ▪ ON = From J20 programming connector<br>▪ OFF = Disabled (must be OFF for usual operation) | Default is OFF |
| **4** | Wireless enable | ▪ ON = Wireless disabled<br>▪ OFF = Wireless enabled | Default is OFF |

| DIP switch 4 positions | | | |
|---|---|---|---|
| **1** | Alternate boot mode | – | Default is OFF |
| **2** | Console boot mode | – | Default is OFF |
| **3** | Protocol 1 – EtherCAT | ▪ Switch 3 = OFF<br>▪ Switch 4 = OFF<br>▪ Switch 5 = OFF | Default is OFF |
| **4** | Protocol 2 (for future use) | ▪ Switch 3 = ON<br>▪ Switch 4 = OFF<br>▪ Switch 5 = OFF | Default is OFF |
| **5** | Protocol 3 (for future use) | ▪ Switch 3 = OFF<br>▪ Switch 4 = ON<br>▪ Switch 5 = OFF | Default is OFF |

Redundant remote on-off is set to disabled (OFF) by default, with a jumper across pin 1 and pin 2 of the J27 connector. For more information,

refer to Pinouts for the discrete cable for the expansion PCB on page 165 and Install a redundant remote on-off switch on page 207.

# Plasma power supply chopper PCB (141319) diagram

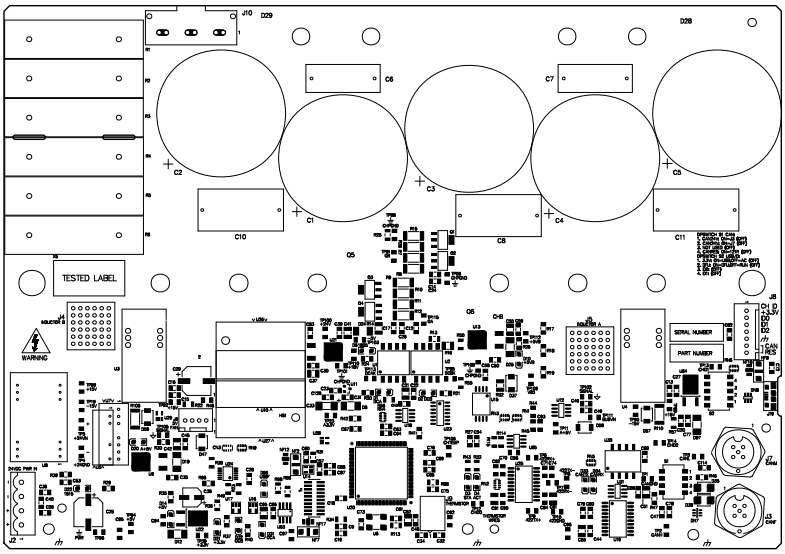


| LED | Signal | LED | Signal |
|---|---|---|---|
| D22 | +15V AND -15V POWER | D1 | DCA |
| D14 | +5 V | D2 | DCB |
| D21 | +3.3 V | D3 | STATUS |
| D32 | OVER CURRENT CHANNEL B | D4 | ACTIVITY |
| D31 | OVER CURRENT CHANNEL A | D10 | +5VB |
| D96 | USB FLAG | D33 | CAN TX |
| D6 | +18V AND -5V POWER | D34 | CAN RX |

# Plasma power supply start circuit PCB (141360) diagram

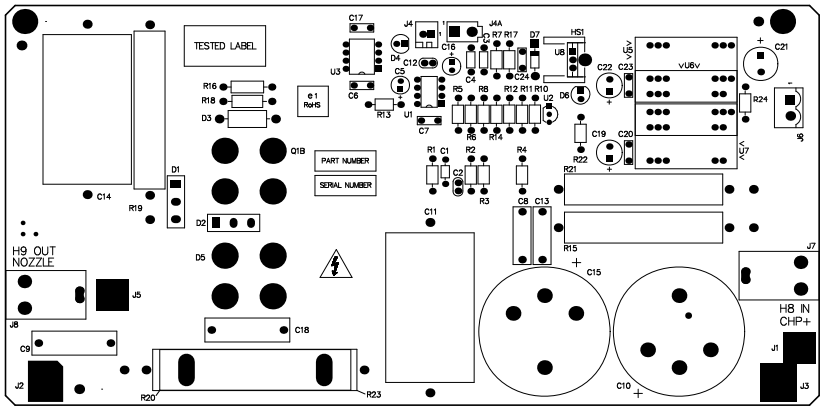


| LED | Signal |
|---|---|
| D4 | PILOT ARC ENABLE |
| D6 | +18V AND -5V POWER |

# Plasma power supply I/O PCB (10085206) diagram

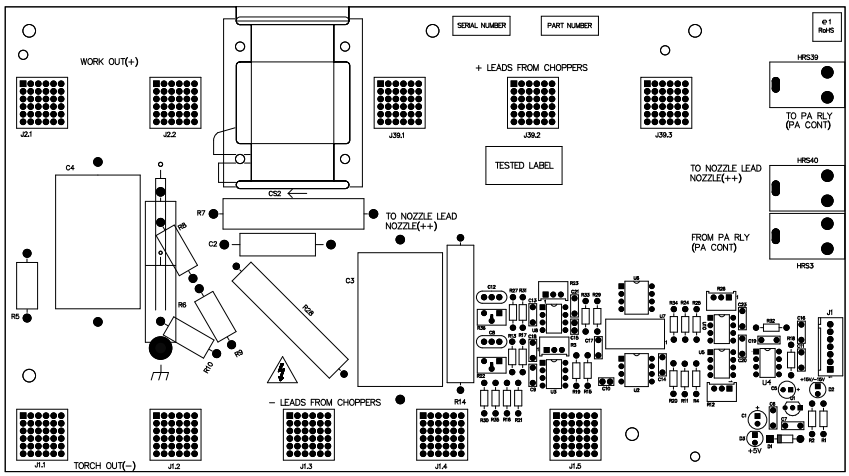


# Fan power distribution PCB (141384) diagram

The fan power distribution PCB is used in the plasma power supply. For the XPR460, this PCB is also used in the cooler.

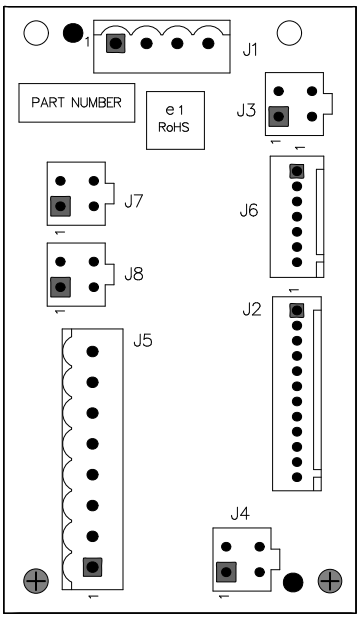


# Gas connect console control PCB (141375) diagram

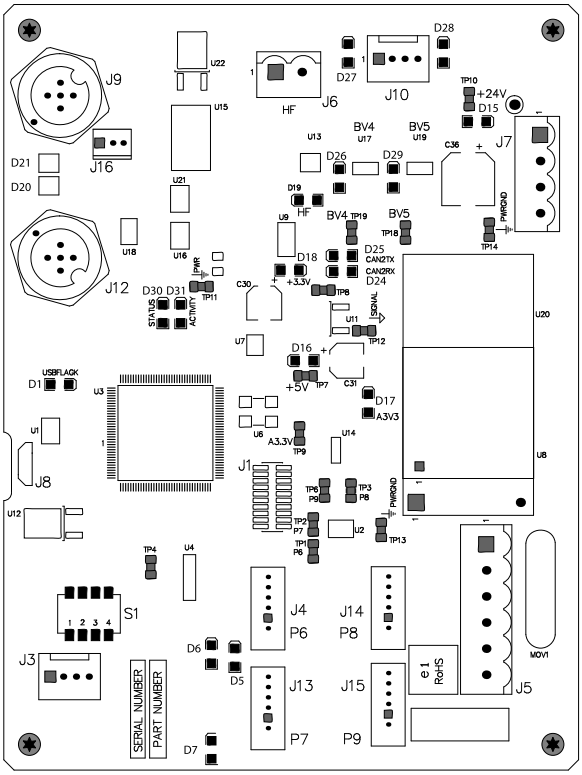

| LED | Signal | LED | Signal |
|---|---|---|---|
| D15 | +24 V | D24 | CAN RX |
| D29 | B5 | D30 | STATUS |
| D26 | B4 | D31 | ACTIVITY |
| D19 | HF | D1 | USB FLAG |
| D18 | +3.3 V | D16 | +5 V |
| D25 | CAN TX | D17 | A3.3 |

# Gas connect console high frequency PCB (141563) diagram

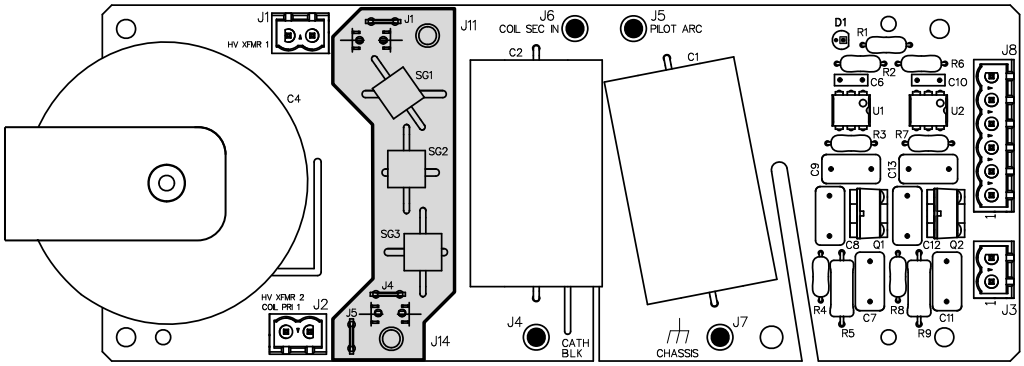


| LED | Signal |
|---|---|
| D1 | HIGH FREQUENCY ENABLE |

# Torch connect console ohmic PCB (141368) diagram

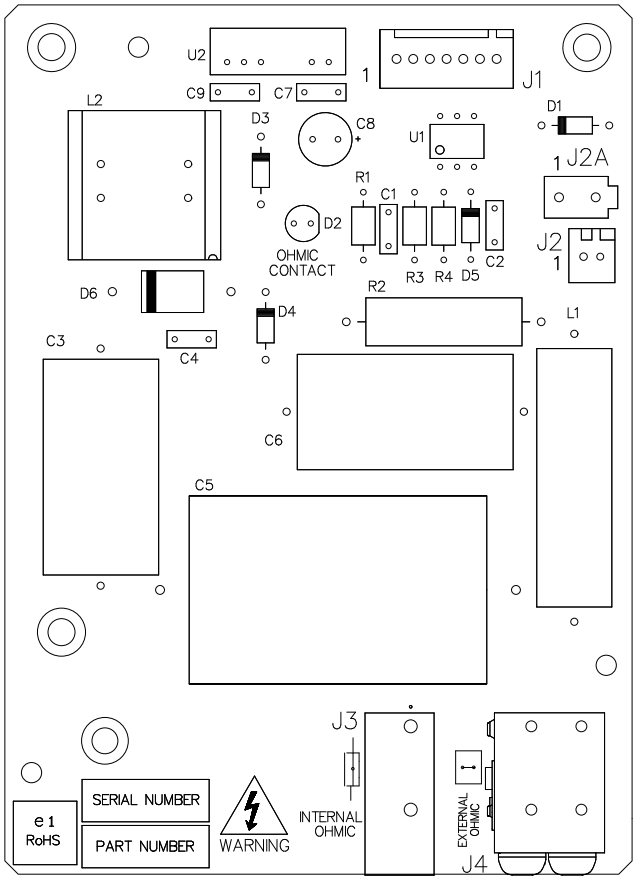


| LED | Signal |
|---|---|
| D2 | Ohmic contact |

# Torch connect console control PCB (141334) diagram

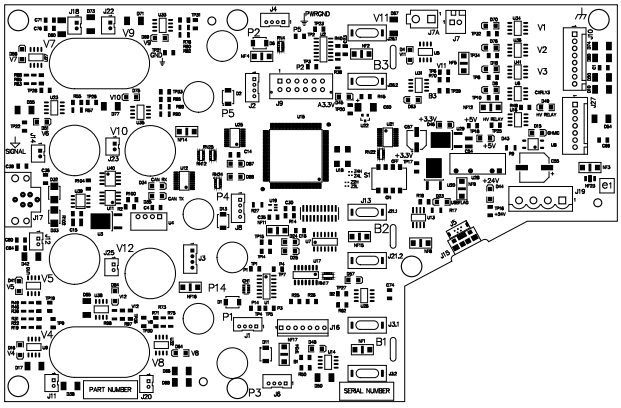

| LED | Signal | LED | Signal |
|---|---|---|---|
| D58 | V7 | D87 | STATUS LED |
| D69 | V9 | D88 | ACTIVITY LED |
| D75 | V10 | D45 | A3.3 V |
| D51 | V6 | D4 | V11 |
| D41 | V5 | D63 | B3 |
| D84 | V12 | D46 | +3.3 V |
| D16 | V4 | D23 | USB FLAG |
| D64 | V8 | D43 | +5 V |
| D34 | CAN RX | D44 | +24 V |
| D35 | CAN TX | D70 | V1 TORCH VALVE |
| D48 | B1 | D76 | V2 (NOT USED IN THIS SYSTEM) |
| D57 | B2 | D18 | V3 (NOT USED IN THIS SYSTEM) |
| D49 | HV RELAY | D8 | (NOT USED IN THIS SYSTEM) |
| D15 | OHMIC CONTACT | | |

# Cooler control PCB (141524) diagram

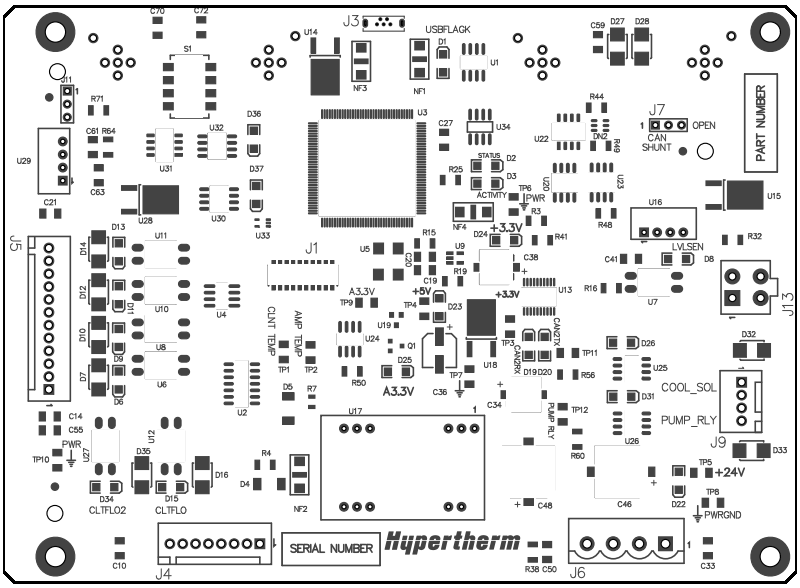

| LED | Signal | LED | Signal |
|---|---|---|---|
| D1 | USB FLAG | D2 | STATUS |
| D3 | ACTIVITY | D8 | COOLANT LEVEL |
| D6 | HXFAN 1 | D9 | HXFAN 2 |
| D23 | +5 V | D24 | +3.3 V |
| D25 | SIGNAL | D26 | +24 V |
| D31 | +24 V | D34 | COOLANT FLOW |
| D36 | CAN1 RX | D37 | CAN1 TX |
| D19 | CAN2 RX | D20 | CAN2 TX |
| D22 | POWER GROUND | | |

# Cooler power distribution PCB (141573) diagram

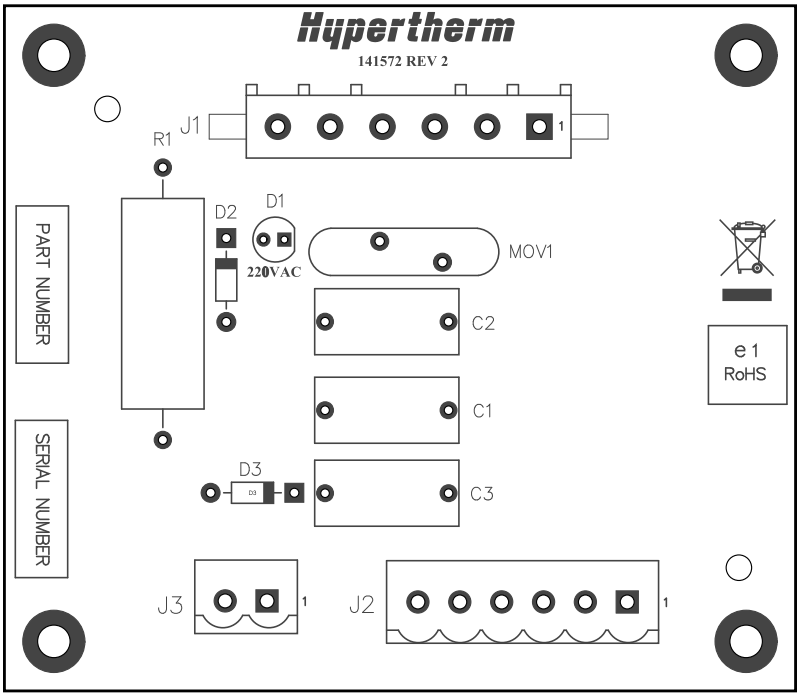


| LED | Signal |
|---|---|
| D1 | 220 VAC |

# 9 Parts List

## Plasma power supply parts

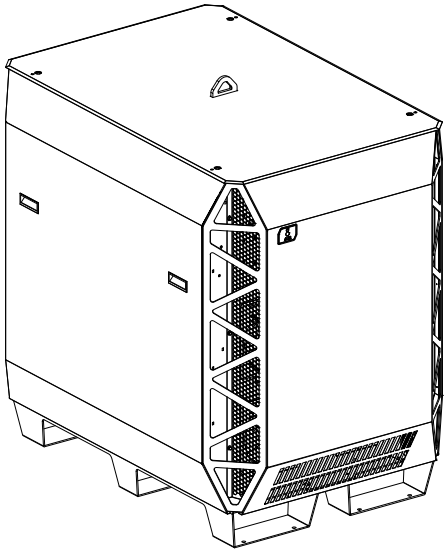

| Part number | Voltage (VAC) |
|---|---|
| 078650 | 200 |
| 078651 | 208 |
| 078652 | 220 |
| 078653 | 240 |
| 078654 | 380 |
| 078655 | 400 |
| 078656 | 415 |

| Part number | Voltage (VAC) |
|---|---|
| 078657 | 440 |
| 078658 | 480 |
| 078659 | 600 |

# Outer panel parts

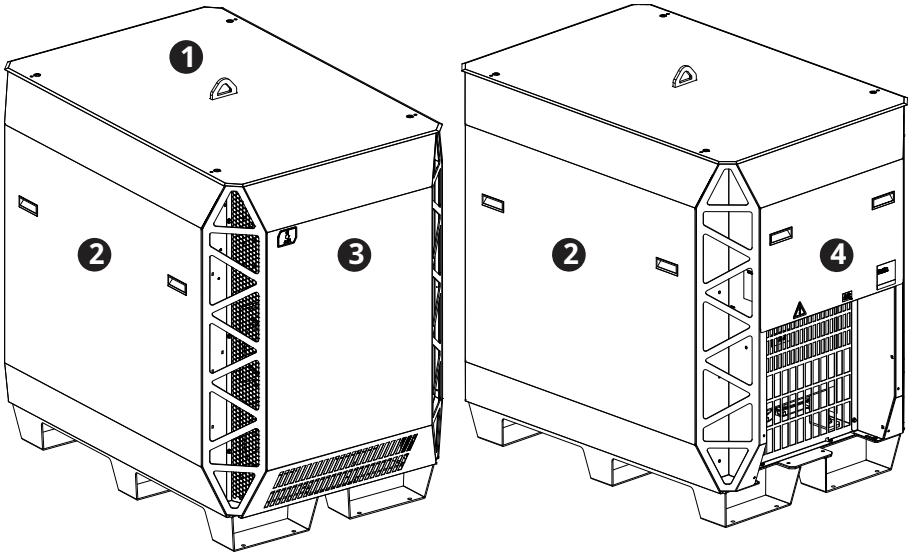


| | Part number | Description | Quantity |
|---|---|---|---|
| **1** | 10084227 | Top panel with labels | 1 |
| **2** | 10084228 | Side panel with labels and handles | 2 |
| **3** | 10084230 | Front panel with "H" (not shown) and power-indicator LED label | 1 |
| **4** | 10084229 | Rear panel with label and handles | 1 |

# Fans

| Part number | Description | Designator | Quantity |
|---|---|---|---|
| 429002 | Power-indicator LED | - | 1 |
| 229821 | Fan: 250 cfm, 48 VDC, 120 mm (4.72 inch) diameter | CAB FAN 1 | 1 |
| 229822 | Fan: 890 cfm, 48 VDC, 254 mm (10 inch) diameter | MAGFAN 1, MAGFAN 2, MAGFAN 3 | 3 |
| 003266 | Solid state relay | - | 1 |
| 141384 | Fan power distribution PCB | PCB6 | 1 |

# Coolant adapters and manifold in the rear compartment

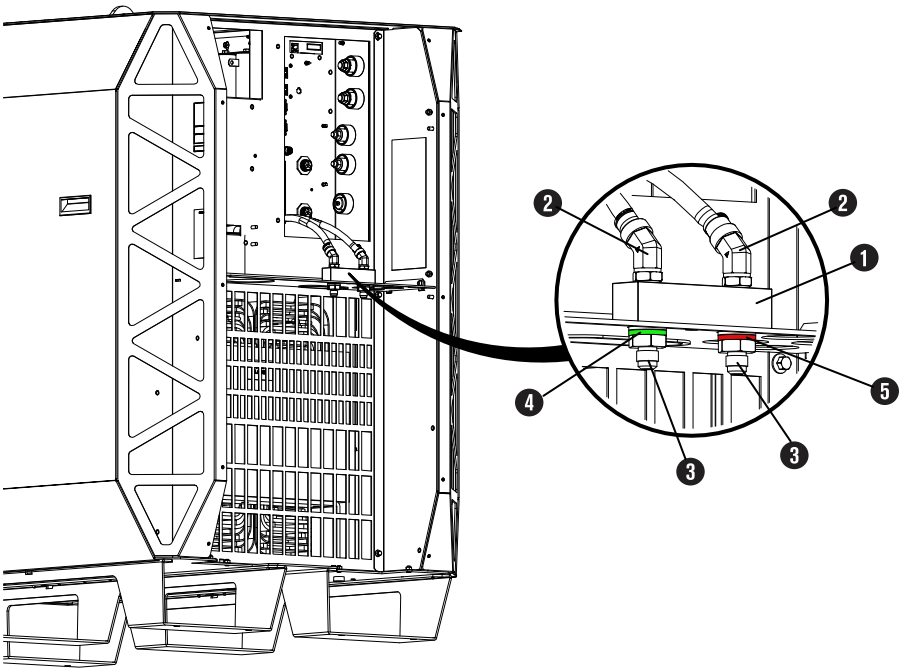


| | Part number | Description | Quantity |
|---|---|---|---|
| | 10082412 | Coolant manifold assembly | 1 |
| **1** | 204405 | Coolant connections manifold | 1 |
| **2** | 015938 | Elbow adapter: 3/8 inch NPT X 1/2 inch tube, 45° swivel | 2 |
| **3** | 10082222 | Adapter: 3/8 inch NPT X #6 male BRS | 2 |
| **4** | 10083877 | Green ring: 0.70 inch inner diameter | 1 |
| **5** | 10083878 | Red ring: 0.70 inch inner diameter | 1 |

# Coolant adapters and manifolds in plasma power supply

| Part number | Description | Location | Quantity |
|---|---|---|---|
| 10082411 | Chopper manifold assembly | on the back of the choppers | 1 |
| 015663 | Adapter: 1/4 inch NPT X 1/2 inch tube | on the manifold behind choppers | 6 |
| 015664 | Elbow adapter: 1/4 inch NPT X 1/2 inch tube | on the manifold behind choppers | 2 |
| 015729 | Green ring: 0.50 inch inner diameter | on the manifold behind choppers | 1 |
| 015730 | Red ring: 0.50 inch inner diameter | on the manifold behind choppers | 1 |
| 104807 | Nut for chopper fitting | on the back of the choppers | 6 |
| 015815 | Elbow fitting: 1/2 inch tube X 1/2 inch tube, 90° | on the back of the choppers | 6 |
| 528123 | Kit: Tubing for plasma power supply | - | 1 |

# Transformers and inductors

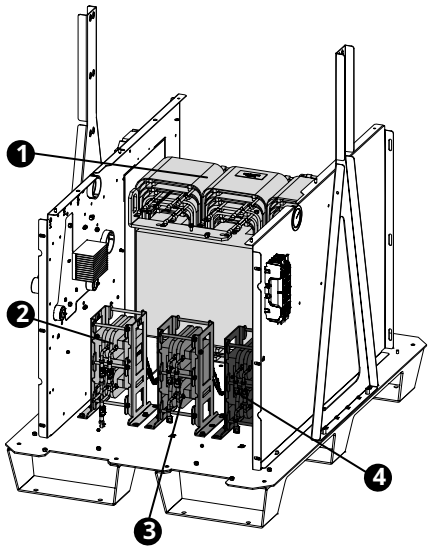

| | Part number | Description | Designator | Quantity |
|---|---|---|---|---|
| **1** | - | Transformer, horizontal, 102.12 kW, 3-phase [1] | T2 | 1 |
| **2** | 10084075 | Kit: Inductor 1A (top)/1B (bottom) | L1 | 1 |
| **3** | 10084076 | Kit: Inductor 2A (top)/2B (bottom) | L2 | 1 |
| **4** | 10084077 | Kit: Inductor 3A (top)/3B (bottom) | L3 | 1 |
| | 10084200 | Kit: Thermistor for the main transformer | - | 2 |

1 You cannot purchase this part. Shown for reference only.

# Control parts - 1

| Part number | Description | Designator | Quantity |
|---|---|---|---|
| 10082976 | Power source: 48 VDC with bracket | PS2 | 1 |
| 141577 | Power distribution PCB | PCB7 | 1 |
| 108709 | Fuse: 10 A, 250 VAC, time delay (on PCB7) | F3, F4, F5 | 3 |
| Control transformer assembly, 3 kVA | | | |
| 429142 | 200 V, 50 Hz - 60 Hz | T1 | 1 |
| 429143 | 208 V, 60 Hz | | |
| 429144 | 220 V, 50 Hz - 60 Hz | | |
| 429145 | 240 V, 60 Hz | | |
| 429146 | 380 V, 50 Hz | | |
| 429147 | 400 V, 50 Hz | | |
| 429148 | 415 V, 50 Hz | | |
| 429149 | 440 V, 50 Hz - 60 Hz | | |
| 429150 | 480 V, 60 Hz | | |
| 429151 | 600 V, 60 Hz | | |
| 10082243 | Start circuit assembly | PCB4 | 1 |

# Control parts - 2

| Part number | Description | Designator | Quantity |
|---|---|---|---|
| 229640 | Power source: 88 VAC - 264 VAC to 24 VDC | PS1 | 1 |
| 10084334 | Control PCB with wireless tag | PCB1 | 1 |
| 141592 | Wireless module for control PCB | U83 | 1 |
| 141597 | Plasma power supply expansion PCB | PCB9 | 1 |
| 208394 | Fuse holder: 2P, 30 A, 600 V | - | 1 |
| 208395 | Fuse: 8 A, 600 V, Class R (used in 380 V, 400 V, 415 V, 440 V, 480 V, 600 V) | F1, F2 | 2 |
| 208397 | Fuse: 15 A, 600 V, Class R (used in 200 V, 208 V, 220 V, 240 V) | | |
| 10085206 | I/OPCB | PCB5 | 1 |
| 003277 | Pilot arc relay: 24 VDC, coil, 60 A 28 VDC contacts | CR1 | 1 |
| 003277 | Cooler power relay: 24 VDC, coil, 60 A 28 VDC contacts | - | 1 |
| 101316 | Relay cover (pilot arc relay and cooler power relay) | - | 2 |
| 10085251 | Chopper assembly | Chopper 1, Chopper 2, Chopper 3 | 3 |

# Wire harness and CAN cables in the plasma power supply

| Part number | Description |
|---|---|
| 429117 | XPR460 wire harness |
| 223399 | CAN cable 0.5 m (1.6 ft) (Located between the choppers.) |
| 223400 | CAN cable 1 m (3.3 ft) (Located between the control PCB and chopper.) |

# Rear compartment of the plasma power supply

| Part number | Description | Designator | Quantity |
|---|---|---|---|
| 003297 | Inrush contactor: 80 A, IEC AC-3, 3-phase, 120 VAC | IR_CON | 1 |
| 209274 | Inrush resistor assembly, 2 Ω X 3 | - | 1 |
| 229033 | Terminal block 600 V, 200 A (380 V, 400 V, 415 V, 440 V, 480 V, 600 V) | TB1 | 1 |
| 10084059 | Terminal block 600 V, 410 A (200 V, 208 V, 220 V, 240 V) | | |
| 10084340 | Main contactor (200 V, 208 V, 220 V, 240 V) | M_CON | 1 |
| 10084339 | Main contactor assembly (380 V, 400 V, 415 V, 440 V, 480 V, 600 V) | | |
| 10083630 | Strain relief (380 V, 400 V, 415 V, 440 V, 480 V, 600 V) | - | 1 |

# Cooler parts

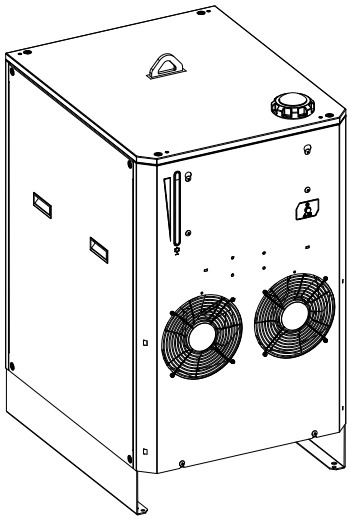

| Part number | Description |
|---|---|
| 078660 | Cooler |

# Cooler outer parts

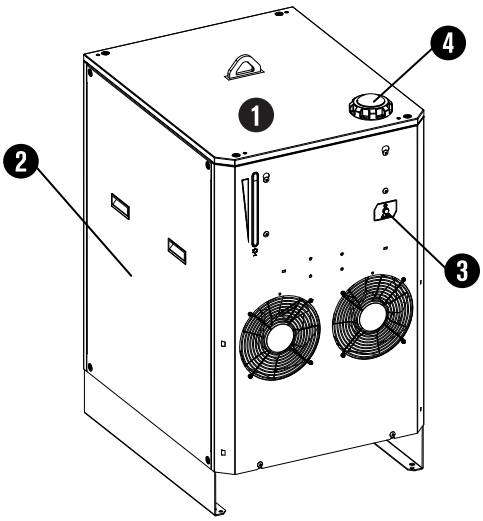


| | Part Number | Description | Quantity |
|---|---|---|---|
| **1** | 10084232 | Cooler top panel | 1 |
| **2** | 10084231 | Cooler side panel | 2 |
| **3** | 229825 | Power-indicator LED | 1 |
| **4** | 127014 | Coolant reservoir cap | 1 |

# Cooler interior parts - view 1

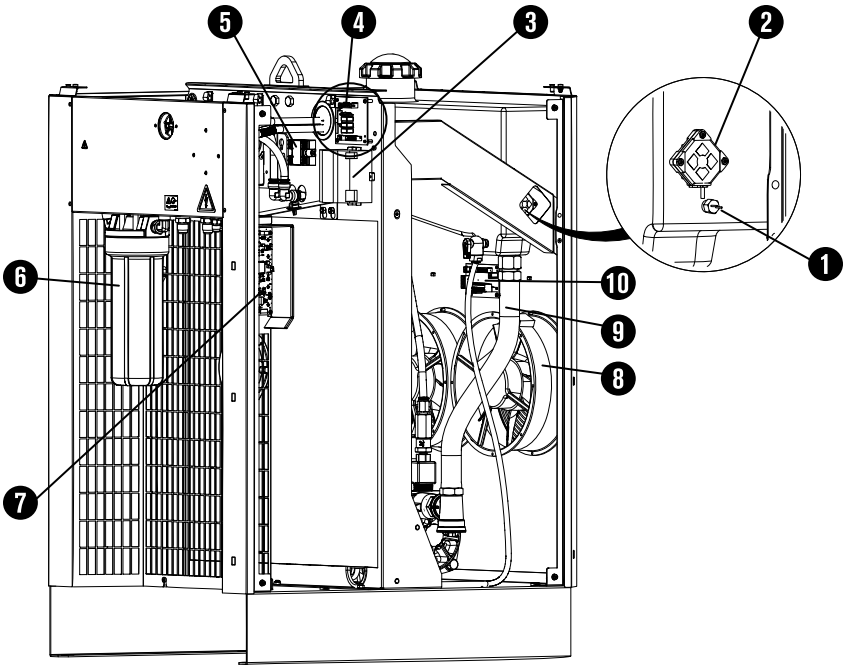

| | Part number | Description | Designator | Quantity |
|---|---|---|---|---|
| 1 | 229224 | Coolant thermistor | - | 1 |
| 2 | 229775 | Coolant level sensor | - | 1 |
| 3 | 229640 | Power source: 88 VAC – 264 VAC to 24 VDC | PS1 | 1 |
| 4 | 141573 | Cooler power distribution PCB | PCB1 | 1 |
| 5 | 003266 | Solid state relay | - | 1 |
| 6 | 127344 | Coolant filter housing | - | 1 |
| | 027005 | Coolant filter (fine) | - | 1 |
| | 10078822 | Wrench for coolant filter housing | - | 1 |
| 7 | 141524 | Cooler control PCB | PCB2 | 1 |
| 8 | 229822 | Fan: 890 cfm, 48 VDC, 254 mm (10 inch) diameter | HXFAN 1, HXFAN 2 | 2 |
| 9 | 10082471 | Coolant hose (1 inch) | - | 1 |
| 10 | 141384 | Fan power distribution PCB | PCB3 | 1 |

## Cooler interior parts - view 2

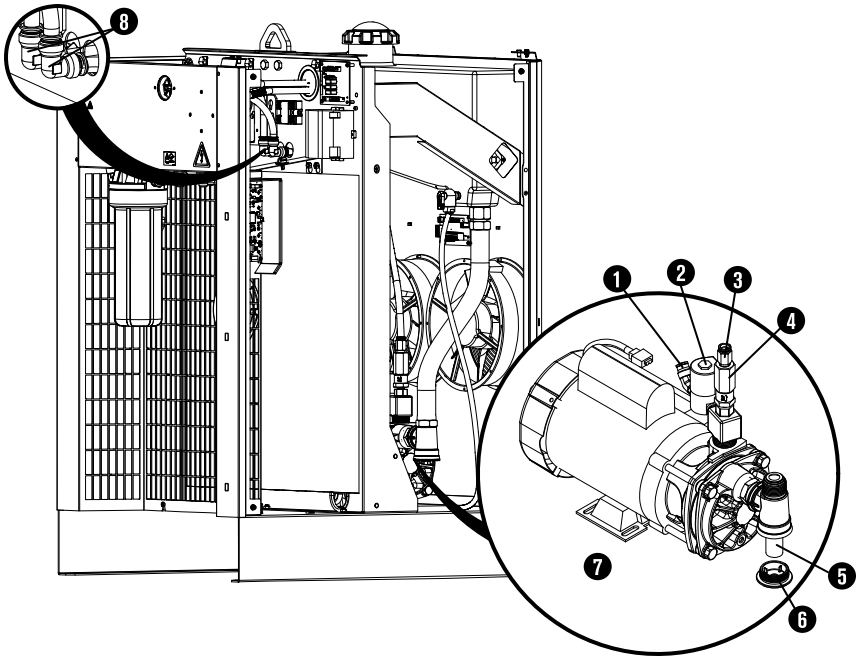

| | Part Number | Description | Designator | Quantity |
|---|---|---|---|---|
| **1** | 015938 | Elbow adapter: 3/8 inch NPT X 1/2 inch tube, 45° swivel | - | 1 [1] |
| **2** | 229721 | Coolant solenoid valve assembly | - | 1 |
| **3** | 015663 | Adapter: 1/4 inch NPT X 1/2 inch tube | - | 1 [1] |
| **4** | 006132 | Coolant bypass check valve | - | 1 |
| **5** | 127559 | Coolant pump screen (coarse) | - | 1 |
| **6** | 229843 | Plug and O-ring | - | 1 |
| | 044554 | O-ring, on plug | | |
| **7** | 428729 | Coolant pump and motor assembly:<br>▪ Adapter: 1-5/8 inch X 1 inch NPT X #16 JIC<br>▪ Plug with O-ring<br>▪ Coolant pump screen (coarse)<br>▪ Pump and motor<br>▪ Adapter: 1 inch MNPT X 1 inch MNPT hexagonal collar<br>▪ Adapter: 1 inch MNPT X 3/8 inch FNPT X 1/4 inch FNPT<br>▪ Adapter: 3/8 inch hexagonal<br>▪ Coolant solenoid valve assembly | - | 1 |
| **8** | 015815 | Elbow fitting: 1/2 inch tube X 1/2 inch tube, 90° | | 2 |

1 Refer to Cooler interior parts - view 3 on page 402 for other locations.

# Cooler interior parts - view 3

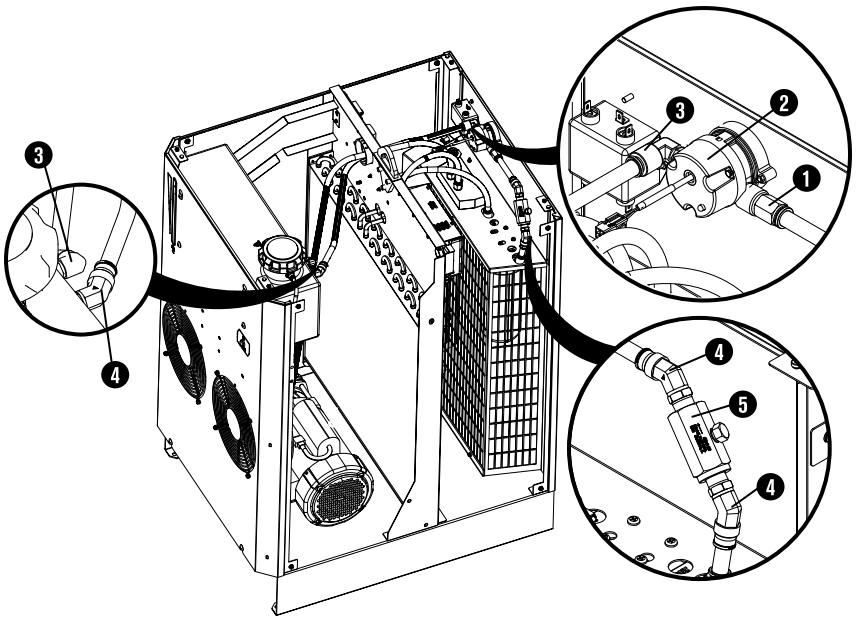

| | Part Number | Description | Designator | Quantity |
|---|---|---|---|---|
| **1** | 015663 | Adapter: 1/4 inch NPT X 1/2 inch tube | - | 1 [1] |
| **2** | 229741 | Coolant flow meter | - | 1 |
| **3** | 015664 | Elbow adapter: 1/4 inch NPT X 1/2 inch tube | | 2 |
| **4** | 015938 | Elbow adapter: 3/8 inch NPT X 1/2 inch tube, 45° swivel | | 3 [1] |
| **5** | 006113 | Coolant check valve | - | 1 |
| | 528082 | Kit: Tubing (1 inch hose not included) | - | 1 |
| | 429114 | Cooler wire harness | - | 1 |

1 Refer to Cooler interior parts - view 2 on page 401 for other locations.

# Cooler interior parts - view 4

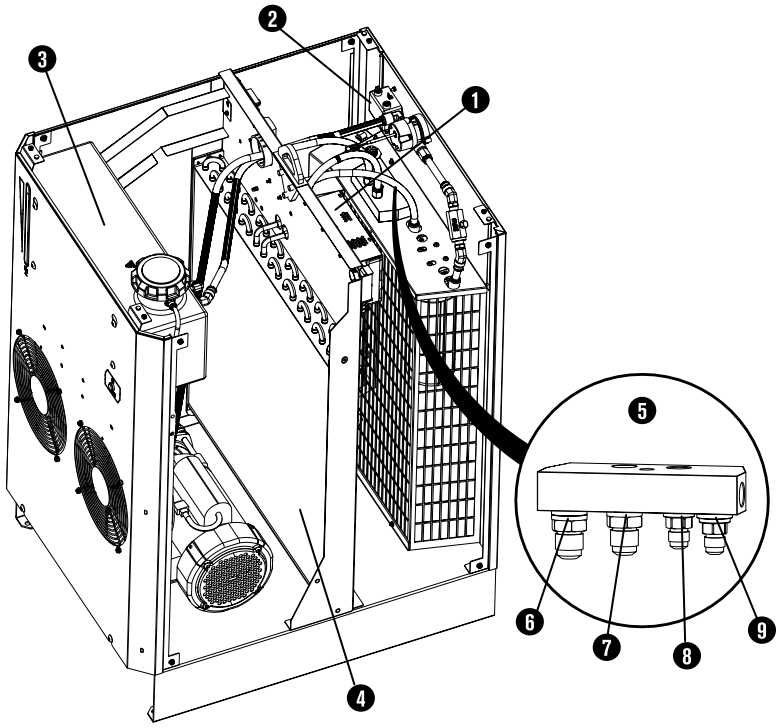


| | Part Number | Description | Designator | Quantity |
|---|---|---|---|---|
| **1** | 10082976 | Power source: 48 VDC with bracket | PS2 | 1 |
| **2** | 209643 | EMI filter | - | 1 |
| **3** | 10082942 | Coolant reservoir | - | 1 |
| **4** | 127853 | Cooler heat exchanger | - | 1 |

| | Part Number | Description | Designator | Quantity |
|---|---|---|---|---|
| **5** | 10082413 | Coolant hose manifold assembly | - | 1 |
| **6** | 10083877 | Green ring: 0.70 inch inner diameter | - | 1 |
| **7** | 10083878 | Red ring: 0.70 inch inner diameter | - | 1 |
| **8** | 015729 | Green ring: 0.50 inch inner diameter | - | 1 |
| **9** | 015730 | Red ring: 0.50 inch inner diameter | - | 1 |

# Gas connect console parts

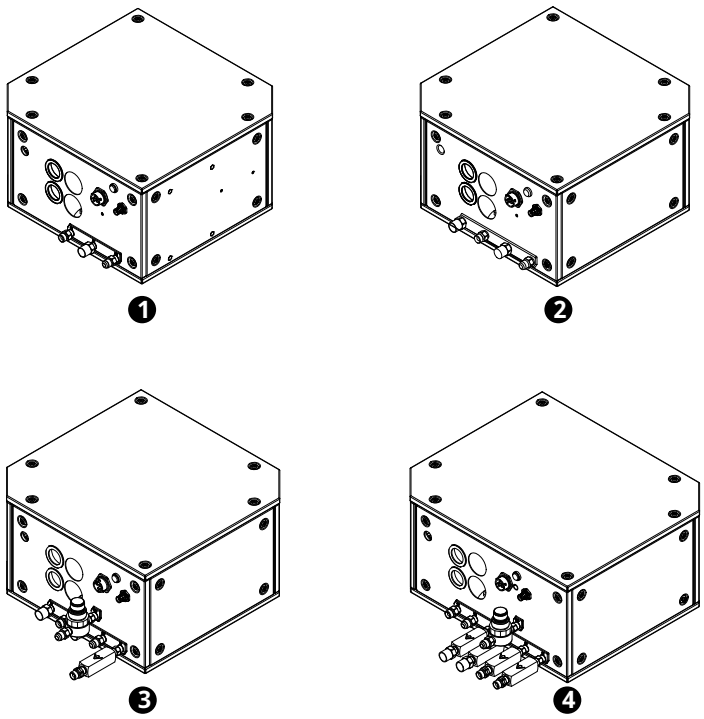


| | Part number | Description |
|---|---|---|
| **1** | 078631 | Core gas connect console |
| **2** | 078662 | CorePlus gas connect console |
| **3** | 078632 | VWI gas connect console |
| **4** | 078633 | OptiMix gas connect console |

# Gas connect console high-voltage side parts

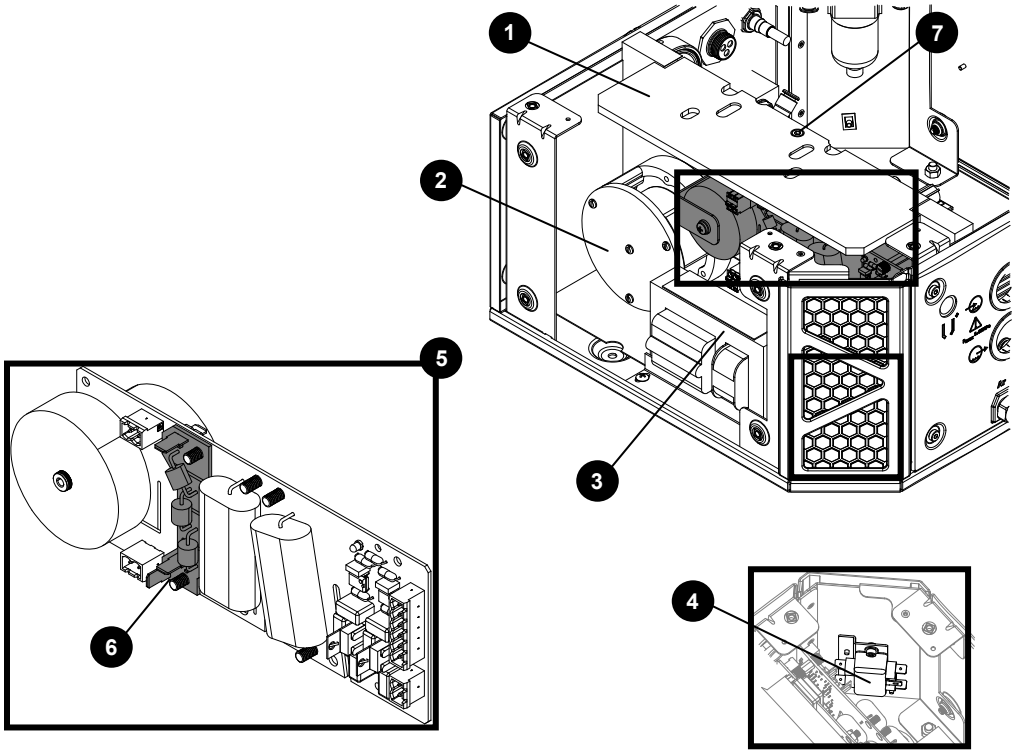


| | Part number | Description | Console | Designator | Quantity |
|---|---|---|---|---|---|
| **1** | 002570 | Insulator | Core, CorePlus, VWI, OptiMix | – | 1 |
| **2** | 10079807 | Coil assembly | Core, CorePlus, VWI, OptiMix | T2 | 1 |
| **3** | 229838 | High-frequency, high-voltage transformer | Core, CorePlus, VWI, OptiMix | T1 | 1 |
| **4** | 009045 | EMI filter | Core, CorePlus, VWI, OptiMix | – | 1 |
| **5** | 141563 | High-frequency, high-voltage ignition PCB | Core, CorePlus, VWI, OptiMix | PCB2 | 1 |
| **6** | 141595 | Spark gap PCB | Core, CorePlus, VWI, OptiMix | – | 1 |
| **7** | 075678 | Socket head cap screw: M5 - 0.8 X 10 mm hexagonal | Core, CorePlus, VWI, OptiMix | – | 1 |

# Gas connect console manifold side parts

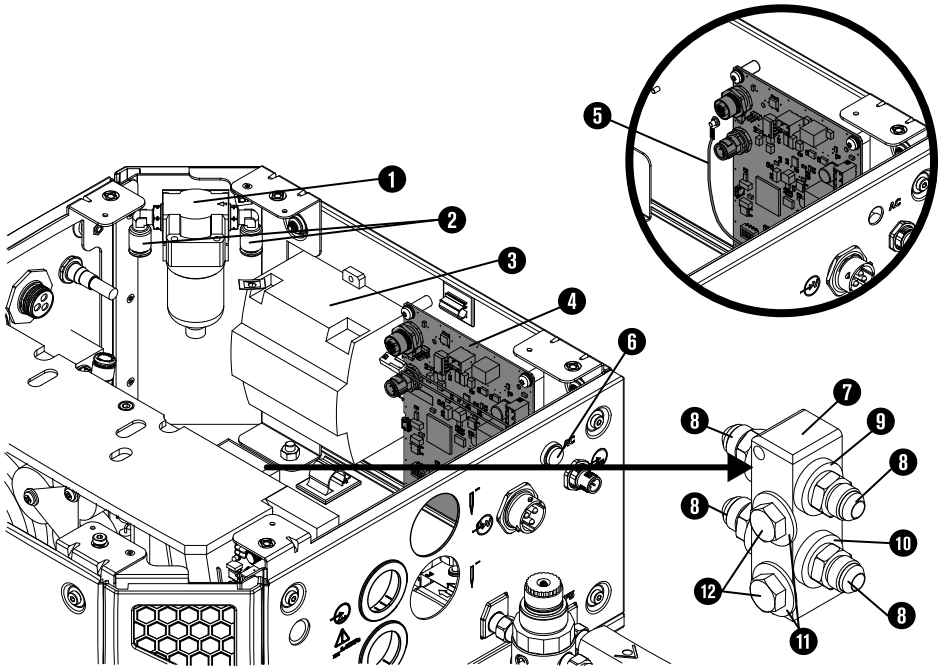


| | Part number | Description | Console | Designator | Quantity |
|---|---|---|---|---|---|
| **1** | 011151 | Air filter assembly | Core, CorePlus, VWI, OptiMix | – | 1 |
| | 011110 | Air filter element | Core, CorePlus, VWI, OptiMix | – | 1 |
| **2** | 015853 | Male elbow adapter: 1/4 inch NPT X 5/16 inch tube | Core, CorePlus, VWI, OptiMix | – | 2 |
| **3** | 229640 | Power source: 88 VAC - 264 VAC to 24 VDC | VWI, OptiMix only | – | 1 |
| **4** | 141375 | Control PCB | Core, CorePlus, VWI, OptiMix | PCB1 | 1 |
| **5** | 429205 | Wire harness for control PCB<br>This is not a ground wire, and it is not included with the 141375 control PCB. | CorePlus only | – | 1 |
| **6** | 229825 | Green power-indicator LED assembly | Core, CorePlus, VWI, OptiMix | – | 1 |
| **7** | 104757 | Coolant manifold | Core, CorePlus, VWI, OptiMix | – | 1 |

| | Part number | Description | Console | Designator | Quantity |
|---|---|---|---|---|---|
| **8** | 015029 | Adapter: 1/2 inch NPT X #8 male | Core, CorePlus, VWI, OptiMix | – | 4 |
| **9** | 015898 | Green ring: 0.87 inches inner diameter | Core, CorePlus, VWI, OptiMix | – | 2 |
| **10** | 015899 | Red ring: 0.87 inches inner diameter | Core, CorePlus, VWI, OptiMix | – | 2 |
| **11** | 075218 | Washer | Core, CorePlus, VWI, OptiMix | – | 2 |
| **12** | 075140 | Bolt | Core, CorePlus, VWI, OptiMix | – | 2 |

# Core gas connect console manifolds and adapters

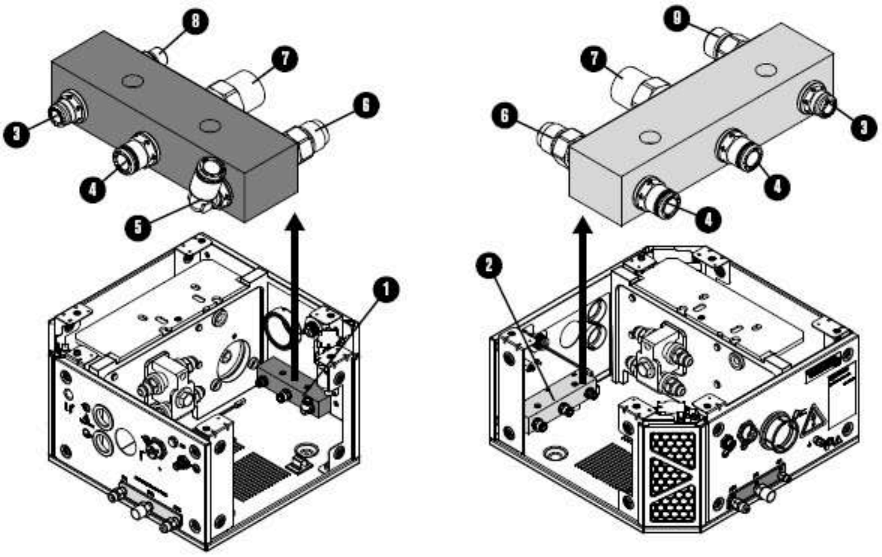


| | Part number | Description | Quantity |
|---|---|---|---|
| **1** | 104806 | Manifold: Gas output (no adapters) | 1 |
| **2** | 104802 | Manifold: Gas input (no adapters) | 1 |
| **Push-to-connect adapters** | | | |
| **3** | 015876 | 1/4 inch NPT X 1/4 inch tube | 2 |
| **4** | 015811 | 1/4 inch NPT X 8 mm tube | 3 |
| **5** | 015853 | Male elbow: 1/4 inch NPT X 5/16 inch tube | 1 |

| | Part number | Description | Quantity |
|---|---|---|---|
| **Threaded adapters with thread sealant applied** | | | |
| **6** | 015012 | 1/4 inch NPT X #6 male (air output and input) | 2 |
| **7** | 015103 | 1/4 inch NPT X RH ‘B’ inert female (nitrogen output and input) | 2 |
| **8** | 015116 | 1/8 inch NPT X RH ‘A’ male (oxygen output) | 1 |
| **9** | 015009 | 1/4 inch NPT X RH ‘B’ male (oxygen input) | 1 |

# CorePlus gas connect console manifolds and adapters

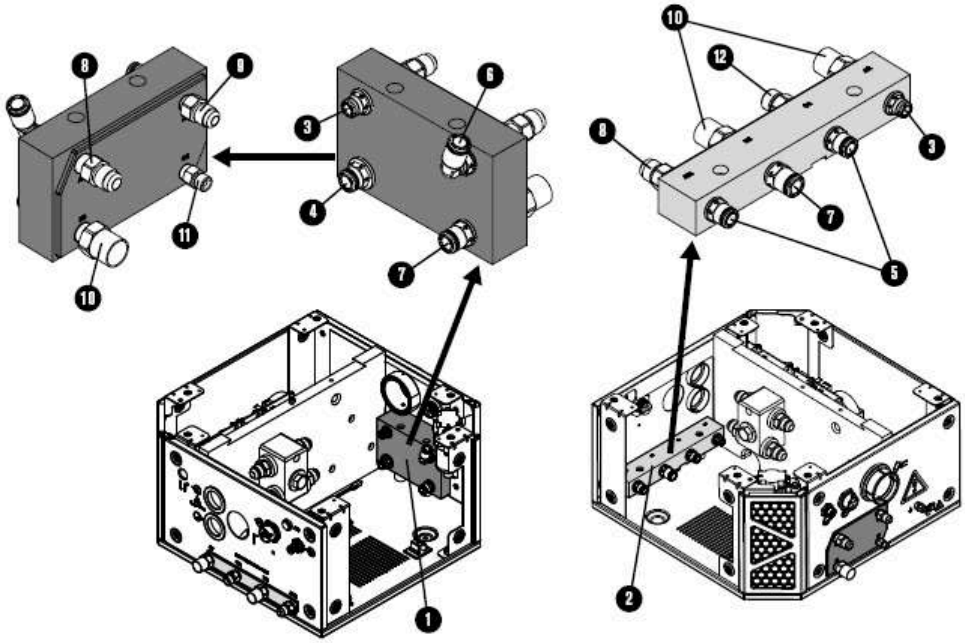


| | Part number | Description | Quantity |
|---|---|---|---|
| **1** | 10078917 | Manifold: Gas output (no adapters) | 1 |
| **2** | 10078916 | Manifold: Gas input (no adapters) | 1 |
| **Push-to-connect adapters** | | | |
| **3** | 015876 | 1/4 inch NPT X 1/4 inch tube | 2 |
| **4** | 015910 | 3/8 inch NPT X 5/16 inch tube | 1 |
| **5** | 015811 | 1/4 inch NPT X 8 mm tube | 3 |
| **6** | 015909 | Male elbow: 1/4 inch NPT X 5/16 inch tube | 1 |
| **7** | 015907 | 1/4 inch NPT X 3/8 inch tube | 1 |
| **Threaded adapters with thread sealant applied** | | | |

| | Part number | Description | Quantity |
|---|---|---|---|
| **8** | 015012 | 1/4 inch NPT X #6 male (air output and input) | 2 |
| **9** | 015197 | Adapter: 1/8 inch NPT X #5 male (argon outlet) | 1 |
| **10** | 015103 | 1/4 inch NPT X RH ‘B’ inert female (nitrogen output and input) | 3 |
| **11** | 015116 | 1/8 inch NPT X RH ‘A’ male (oxygen output) | 1 |
| **12** | 015009 | 1/4 inch NPT X RH ‘B’ male (oxygen input) | 1 |

# VWI gas connect console input and output manifolds and adapters

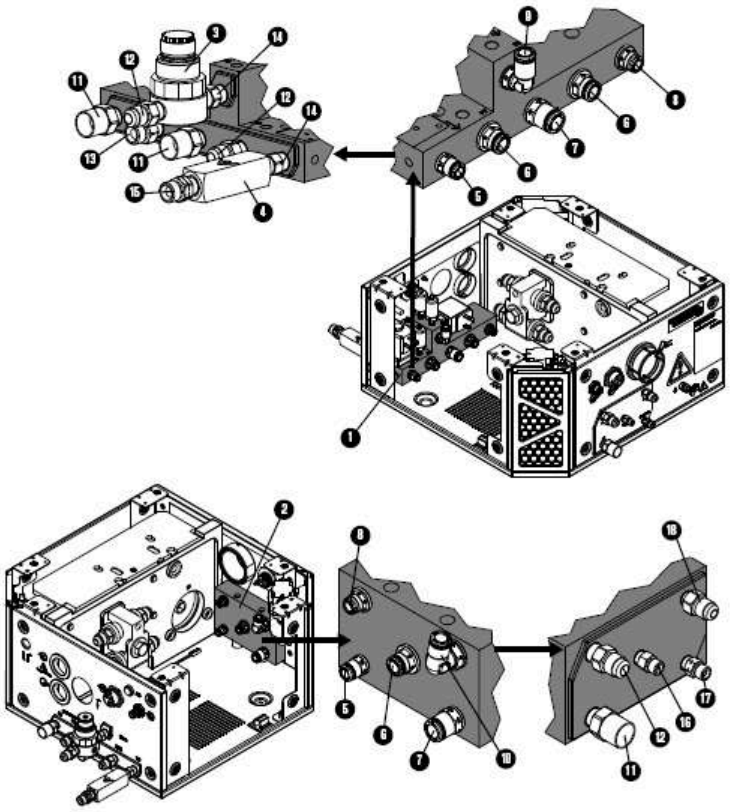

| | Part number | Description | Quantity |
|---|---|---|---|
| **1** | 229898 | Manifold: Gas input (with adapters) | 1 |
| **2** | 104843 | Manifold: Gas output (no adapters) | 1 |
| **3** | 229844 | Water regulator | 1 |
| **4** | 006157 | Check valve | 1 |
| **Push-to-connect adapters** | | | |

| | Part number | Description | Quantity |
|---|---|---|---|
| **5** | 015905 | 1/8 inch NPT X 1/4 inch tube | 2 |
| **6** | 015910 | 3/8 inch NPT X 5/16 inch tube | 2 |
| **7** | 015907 | 1/4 inch NPT X 3/8 inch tube | 1 |
| **8** | 015876 | 1/4 inch NPT X 1/4 inch tube | 1 |
| **9** | 015853 | Elbow: 1/4 inch NPT X 5/16 inch tube, 90° | 1 |
| **10** | 015909 | Elbow: 3/8 inch NPT X 5/16 inch tube, 90° | - |
| **Threaded adapters with thread sealant applied** | | | |
| **11** | 015103 | 1/4 inch NPT X RH ‘B’ inert female | 3 |
| **12** | 015012 | 1/4 inch NPT X #6 male | 3 |
| **13** | 015009 | 1/4 inch NPT X RH ‘B’ male | 1 |
| **14** | 015922 | 1/4 inch X hexagonal collar | 2 |
| **15** | 015230 | 1/4 inch NPT X LH ‘B’ | 1 |
| **16** | 015116 | Adapter: 1/8 inch NPT X RH ‘A’ (oxygen outlet) | 1 |
| **17** | 015210 | Adapter: 1/8 inch NPT X LH ‘A’ male (hydrogen mix outlet) | 1 |
| **18** | 015197 | Adapter: 1/8 inch NPT X #5 male (argon outlet) | 1 |

# OptiMix gas connect console input and output manifolds and adapters

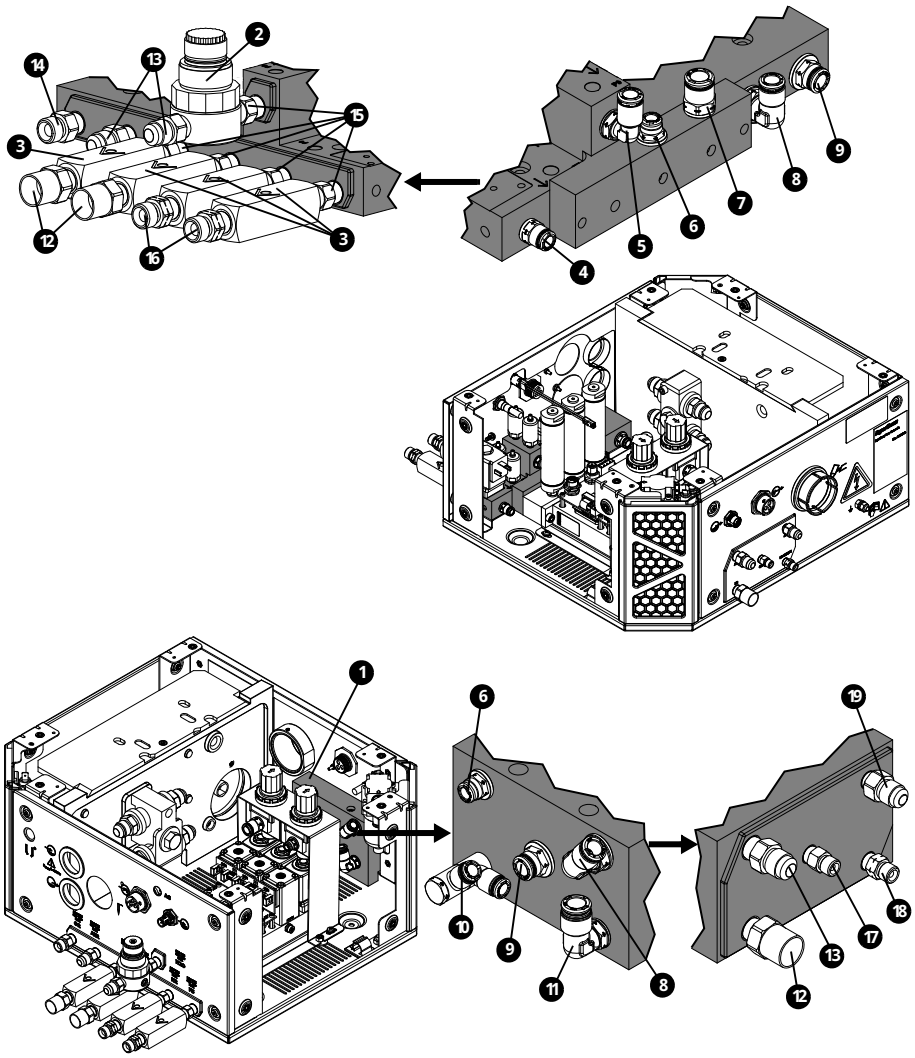

| | Part number | Description | Quantity |
|---|---|---|---|
| **1** | 104843 | Manifold: Gas output (no adapters) | 1 |
| **2** | 229844 | Water regulator | 1 |
| **3** | 006157 | Check valve | 4 |
| **Push-to-connect adapters** | | | |
| **4** | 015905 | 1/8 inch NPT X 1/4 inch tube | 1 |
| **5** | 015853 | Elbow: 1/4 inch NPT X 5/16 inch tube | 1 |
| **6** | 015876 | 1/4 inch NPT X 1/4 inch tube | 1 |
| **7** | 015907 | 1/4 inch NPT X 3/8 inch tube | 1 |

| | Part number | Description | Quantity |
|---|---|---|---|
| **8** | 015909 | Elbow: 3/8 inch NPT X 5/16 inch tube | 1 |
| **9** | 015910 | 3/8 inch NPT X 5/16 inch tube | 1 |
| **10** | 015906 | Dual connection: 1/8 inch NPT X 1/4 inch tube | 1 |
| **11** | 015908 | Elbow: 1/4 inch NPT X 3/8 inch tube | 1 |
| **Threaded adapters with thread sealant applied** | | | |
| **12** | 015103 | 1/4 inch NPT X RH ‘B’ inert female | 3 |
| **13** | 015012 | 1/4 inch NPT X #6 male | 3 |
| **14** | 015009 | 1/4 inch NPT X RH ‘B’ male | 1 |
| **15** | 015922 | 1/4 inch X hexagonal collar | 5 |
| **16** | 015230 | 1/4 inch NPT X LH ‘B’ | 1 |
| **17** | 015116 | 1/8 inch NPT X RH ‘A’ | 1 |
| **18** | 015210 | 1/8 inch NPT X LH ‘A’ | 1 |
| **19** | 015197 | 1/8 inch NPT X #5 | 1 |

To replace the gas input manifold with adapters in an OptiMix gas connect console, contact your cutting machine supplier or regional Hypertherm Customer Service representative.

## VWI and OptiMix gas connect console mixer, resonators, transducers, and valves

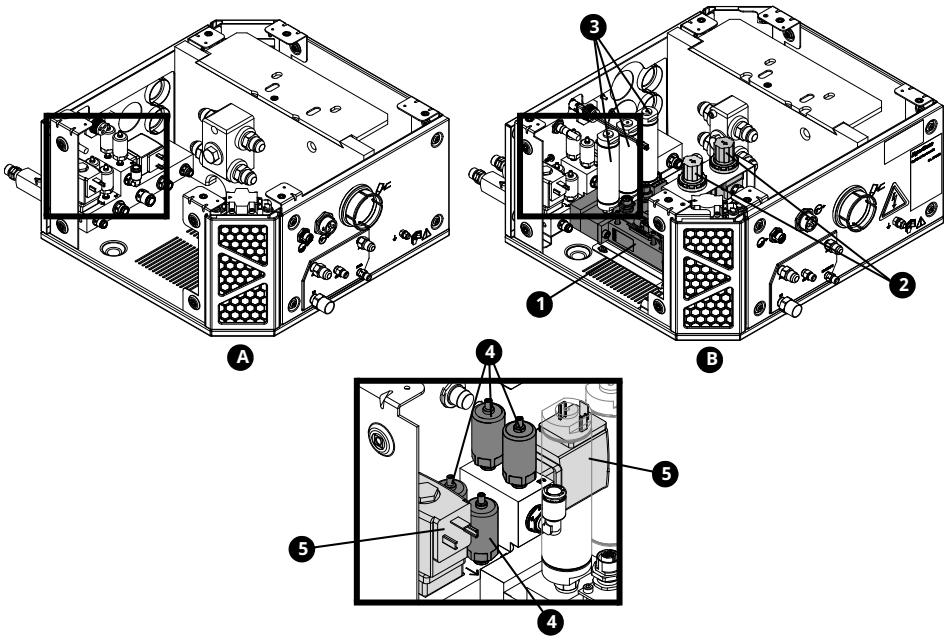


**A** VWI

**B** OptiMix

| | Part number | Description | Console | Designator | Quantity |
|---|---|---|---|---|---|
| **1** | 229703 | Mixer module | OptiMix | - | 1 |
| | 528057 | Kit: Mixer module and cable ties | OptiMix | - | 1 |
| **2** | 011101 | Regulator | OptiMix | - | 2 |
| **3** | 10082792 | Resonator | OptiMix | - | 3 |
| **4** | 223398 | Pressure transducer | VWI and OptiMix | P6 - P9 | 4 |
| **5** | 006167 | Proportional valve | VWI and OptiMix | B4, B5 | 2 |

# Gas connect console wire harness, hose kit, and CAN cables

| Part number | Description | Console | Quantity |
|---|---|---|---|
| 229718 | Wire harness | Core, CorePlus | 1 |
| 229719 | Wire harness | VWI | |
| 229720 | Wire harness | OptiMix | |

| Part number | Description | Console | Quantity |
|---|---|---|---|
| 428490 | Kit: Tubing | Core | 1 |
| 10078918 | Kit: Tubing | CorePlus | |
| 428491 | Kit: Tubing | VWI | |
| 428492 | Kit: Tubing | OptiMix | |
| 223709 | CAN cable 0.38 m (1.2 ft) to external connector | Core, CorePlus, VWI, OptiMix | 1 |
| 223710 | CAN cable 0.48 m (1.6 ft) male-female | Core, CorePlus, VWI | 1 |
| 223711 | CAN cable 0.5 m (1.6 ft) male-female | OptiMix | 1 |
| 223712 | CAN cable 0.39 m (1.3 ft) male-female | OptiMix | 1 |

# TorchConnect console parts

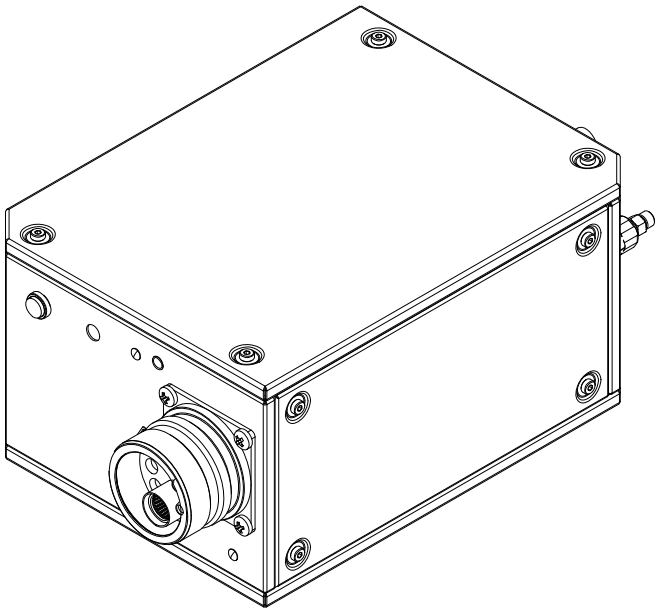

| Part number | Description |
|---|---|
| 078618 | TorchConnect console |

# TorchConnect console EasyConnect side

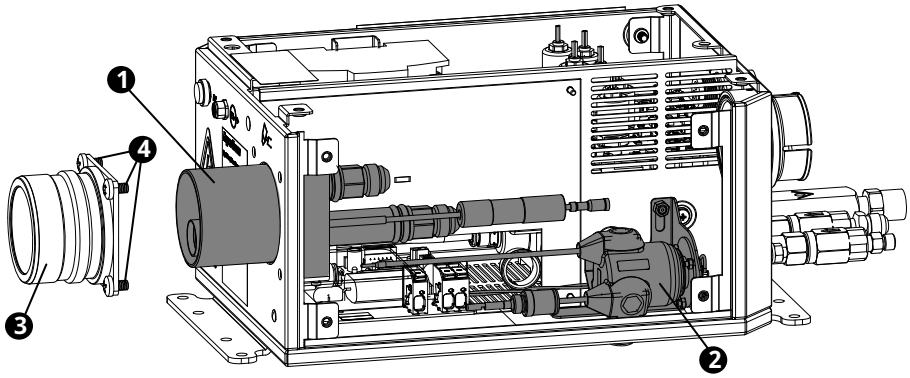


| | Part number | Description | Designator | Quantity |
|---|---|---|---|---|
| **1** | 428730 | Torch receptacle block | - | 1 |
| **2** | 229882 [1] | Ohmic relay and bracket | - | 1 |
| **3** | 420376 | Torch lead connector | - | 1 |
| **4** | 075544 | Machine screw: M6 X 10 mm Phillips, pan head | - | 4 (3 shown) |

1 Includes the ohmic contact PCB (141368).

# TorchConnect console – top

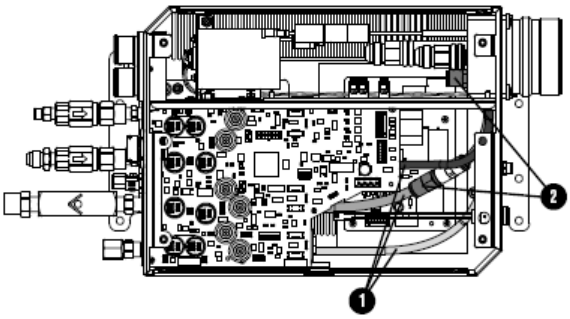


| | Part number | Description | Designator | Quantity |
|---|---|---|---|---|
| **1** | 428338 | Kit: Tubing | - | 1 |
| **2** | 006152 | Check valve | - | 2 |

# TorchConnect console manifold side – view 1

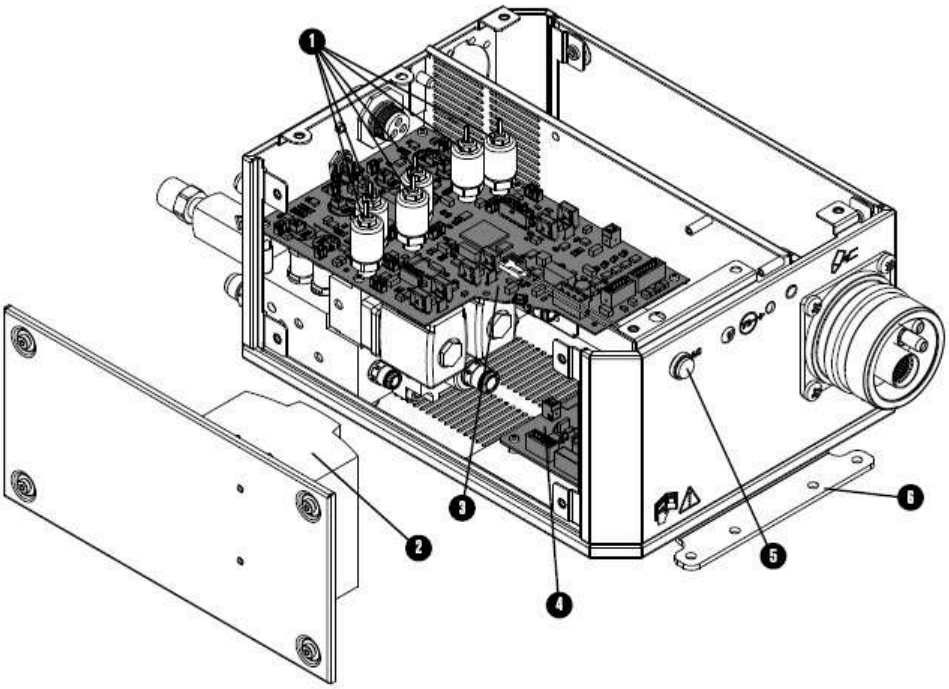


| | Part number | Description | Designator | Quantity |
|---|---|---|---|---|
| **1** | 223477 | Pressure transducer with wire and connector | P1 - P5, P14 | 6 |
| **2** | 229640 | Power source: 88 VAC - 264 VAC to 24 VDC | PS1 | 1 |
| **3** | 141334 | Control PCB | PCB1 | 1 |
| **4** | 141368 | Ohmic contact PCB | PCB2 | 1 |
| **5** | 229825 | Green power-indicator LED assembly | - | 1 |
| **6** | 101366 | Bracket | - | 2 (1 shown) |
| | 229780 | Valve cable 40 mm (1.6 inches) | - | 8 |
| | 229800 | Valve cable 279.4 mm (11 inches) | - | 1 |
| | 229655 | Wire harness | - | 1 |

# TorchConnect console manifold side – view 2

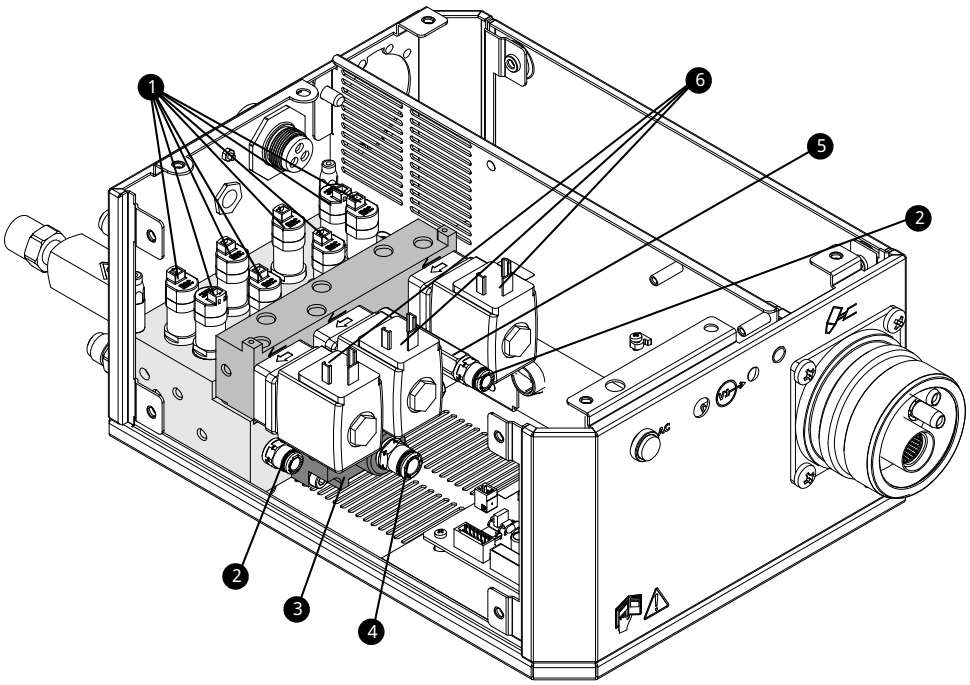


| | Part number | Description | Designator | Quantity |
|---|---|---|---|---|
| | 229895 | Manifold assembly:<br>▪ Solenoid valves<br>▪ Proportional valves<br>▪ All manifolds<br>▪ All fittings | - | 1 |
| **1** | 229965 | Solenoid valve | V4 - V12 | 9 (8 shown) |
| | 229917 | Solenoid valve (229965) tool [1] | - | |
| **2** | 015905 | Adapter: 1/8 inch NPT O-ring seal X 1/4 inch tube | - | 2 |
| **3** | 428756 | Bottom manifold assembly:<br>▪ Bottom manifold<br>▪ Adapter<br>▪ Critical orifice<br>▪ Solenoid valve | - | 1 |
| **4** | 015811 | Adapter: 1/4 inch NPT O-ring seal X 8 mm tube | - | 1 |
| **5** | 104406 | Adapter: 1/8 inch FPT X1/8 inch NPT X1-5/8 inch | - | 1 |
| **6** | 006167 | Proportional valve | B1 - B3 | 3 |
| | 044508 | O-ring | | 7 |

1 Use this tool to remove the solenoid valve without removing the control PCB or the pressure transducers.

# TorchConnect console front adapters and valves

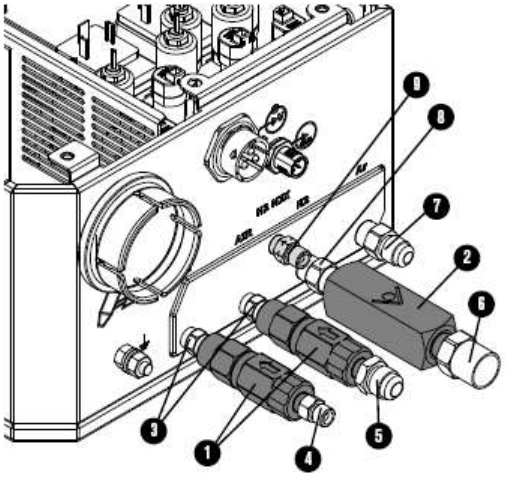

| | Part number | Description | Designator | Quantity |
|---|---|---|---|---|
| **1** | 006077 | Check valve: 1/8 inch FPT | - | 2 |
| **2** | 006157 | Check valve: 1/4 inch NPT female | - | 1 |
| | **Threaded adapters with thread sealant applied** | | | |
| **3** | 015517 | 1/8 inch hexagonal collar | - | 2 |
| **4** | 015116 | 1/8 inch NPT X RH ‘A’ | - | 1 |
| **5** | 015226 | 1/8 inch NPT X #6 male | - | 1 |
| **6** | 015103 | 1/4 inch NPT X RH ‘B’ inert female | - | 1 |
| **7** | 015007 | 1/4 inch NPT X #5 male | - | 1 |
| **8** | 015922 | 1/4 inch hexagonal collar | - | 1 |
| **9** | 015210 | 1/8 inch NPT X LH ‘A’ male | - | 1 |

# Torch assembly

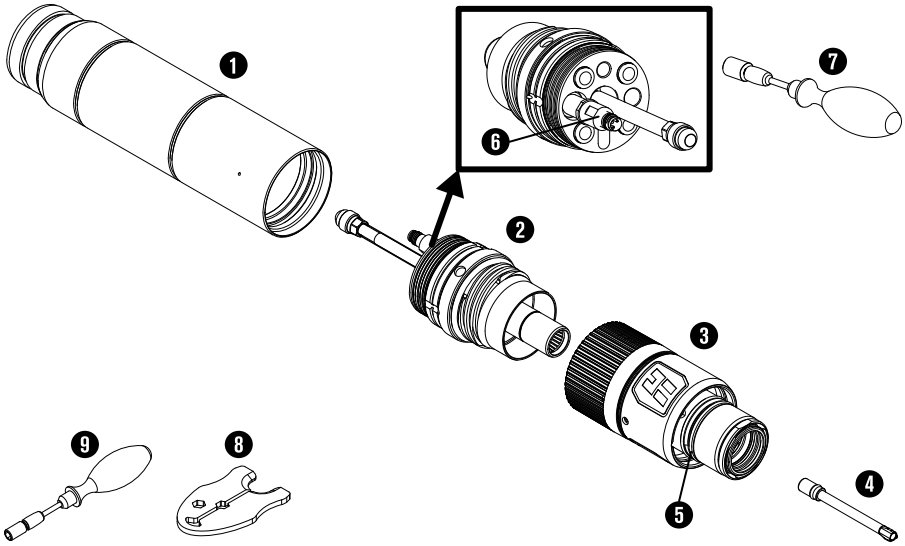


| | Part number | Description |
|---|---|---|
| 1 | 420500 | Torch mount sleeve assembly: Standard |
| | 420501 | Torch mount sleeve assembly: Short |
| | 420502 | Torch mount sleeve assembly: Extended |
| 2 | 420220 | Quick-disconnect/torch receptacle |
| 3 | 420221 | Quick-disconnect torch |
| 4 | 420368 | Water tube |
| 5 | 044028 | O-ring for quick-disconnect torch (refer to Preventive maintenance kits on page 434) |
| 6 | 006155 | Torch solenoid valve (V1) |
| 7 | 229918 | Torch solenoid valve (V1) tool |
| 8 | 10080574 | XPR consumable tool |
| 9 | 429013 | XPR electrode torque tool |
| | 10083906 | Torch assembly, 460 A mild steel consumables |
| | 104879 | 2.25 inch spanner wrench |

# Torch bracket

| Part number | Description |
|---|---|
| 428646 | Torch lifter bracket: 2.25 inch diameter sleeve |

# Consumable starter kits

Refer to Example configurations for consumables on page 236 or the *XPR Cut Charts Instruction Manual (809830)* for specific applications.

## Mild steel consumable starter kit (10083904)

| Part number | Description | Quantity |
|---|---|---|
| 420231 | Electrode: 50 A | 1 |
| 420234 | Nozzle: 50 A | 1 |
| 420237 | Shield: 50 A | 1 |
| 420233 | Swirl ring: 50 A | 1 |
| 420240 | Electrode: 80 A | 2 |
| 420243 | Nozzle: 80 A | 2 |
| 420246 | Shield: 80 A | 2 |
| 420242 | Swirl ring: 80 A - 130 A | 2 |
| 420249 | Electrode: 130 A | 3 |
| 420252 | Nozzle: 130 A | 3 |
| 420255 | Shield: 130 A | 2 |
| 420261 | Nozzle: 170 A | 3 |
| 420258 | Electrode: 170 A | 3 |
| 420513 | Shield: 170 A | 2 |
| 420260 | Swirl ring: 170 A | 1 |
| 420276 | Electrode: 220 A / 300 A | 4 |
| 420270 | Nozzle: 220 A | 1 |
| 420273 | Shield: 220 A | 1 |
| 420406 | Swirl ring: 220 A / 300 A | 2 |
| 420276 | Electrode: 300 A | 3 |
| 420279 | Nozzle: 300 A | 3 |
| 420491 | Shield: 300 A | 2 |
| 420406 | Swirl ring: 300 A | 1 |
| 420834 | Electrode: 460 A | 3 |

| Part number | Description | Quantity |
|---|---|---|
| 520001 | Nozzle: 460 A | 3 |
| 520002 | Shield: 460 A | 2 |
| 420819 | Swirl ring: 460 A | 1 |
| 420368 | Water tube | 1 |
| 420200 | Shield retaining cap | 1 |
| 420365 | Nozzle retaining cap | 1 |
| 104879 | 2.25 inch spanner wrench | 1 |
| 10080574 | XPR consumable tool | 1 |
| 027055 | Silicone lubricant, 1/4 ounce | 1 |

# Mild steel consumable starter kit with torch (10083905)

| Part number | Description | Quantity |
|---|---|---|
| 420221 | Quick-disconnect torch head | 1 |
| 420231 | Electrode: 50 A | 1 |
| 420234 | Nozzle: 50 A | 1 |
| 420237 | Shield: 50 A | 1 |
| 420233 | Swirl ring: 50 A | 1 |
| 420240 | Electrode: 80 A | 2 |
| 420243 | Nozzle: 80 A | 2 |
| 420246 | Shield: 80 A | 2 |
| 420242 | Swirl ring: 80 A - 130 A | 2 |
| 420249 | Electrode: 130 A | 3 |
| 420252 | Nozzle: 130 A | 3 |
| 420255 | Shield: 130 A | 2 |
| 420261 | Nozzle: 170 A | 3 |
| 420258 | Electrode: 170 A | 3 |
| 420513 | Shield: 170 A | 2 |
| 420260 | Swirl ring: 170 A | 1 |
| 420276 | Electrode: 220 A / 300 A | 4 |

| Part number | Description | Quantity |
|---|---|---|
| 420270 | Nozzle: 220 A | 1 |
| 420273 | Shield: 220 A | 1 |
| 420279 | Nozzle: 300 A | 3 |
| 420491 | Shield: 300 A | 2 |
| 420406 | Swirl ring: 220 A / 300 A | 2 |
| 420834 | Electrode: 460 A | 3 |
| 520001 | Nozzle: 460 A | 3 |
| 520002 | Shield: 460 A | 2 |
| 420819 | Swirl ring: 460 A | 1 |
| 420368 | Water tube | 2 |
| 420200 | Shield retaining cap | 2 |
| 420365 | Nozzle retaining cap | 2 |
| 104879 | 2.25 inch spanner wrench | 1 |
| 10080574 | XPR consumable tool | 1 |
| 027055 | Silicone lubricant, 1/4 ounce | 1 |

# Other consumable and torch parts

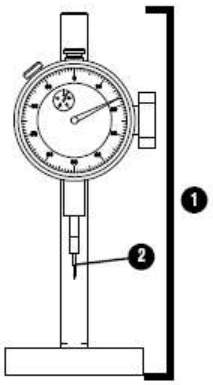


| | Part number | Description |
|---|---|---|
| **1** | 004630 | Pit depth gauge |
| **2** | 004629 | Gauge point |
| | 027055 | Silicone lubricant, 1/4 ounce |

| | Part number | Description |
|---|---|---|
| | 10080574 | XPR consumable tool |
| | 428764 | XPR robotic torch teach accessory |
| | 429013 | XPR electrode torque tool |

# Cable, hose, and lead parts

Use the following cables, hoses, and leads to connect cutting system components.

## Pilot-arc cables with strain relief

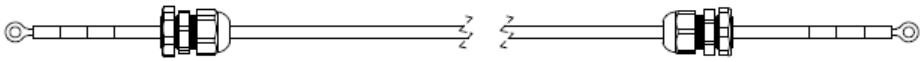

| Part number | Length | Part number | Length |
|---|---|---|---|
| 223529 | 3 m (9.8 feet) | 223535 | 25 m (82 feet) |
| 223530 | 4.5 m (14.8 feet) | 223536 | 35 m (114.8 feet) |
| 223531 | 7.5 m (24.6 feet) | 223537 | 45 m (147.6 feet) |
| 223532 | 10 m (32.8 feet) | 223538 | 60 m (196.9 feet) |
| 223533 | 15 m (49.2 feet) | 223539 | 75 m (246.1 feet) |
| 223534 | 20 m (65.6 feet) | - | - |

## Negative cables with strain relief

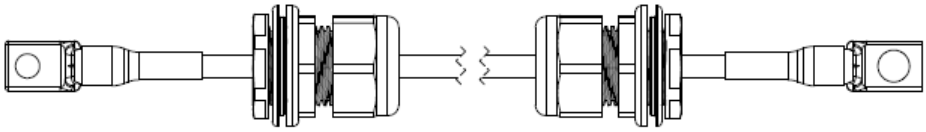

| Part number | Type | Length | Part number | Type | Length |
|---|---|---|---|---|---|
| 10083785 | 2/0 | 3 m (9.8 feet) | 10082635 | 3/0 | 60 m (196.9 feet) |
| 10083786 | 2/0 | 4.5 m (14.8 feet) | 10082636 | 3/0 | 75 m (246.1 feet) |
| 10083787 | 2/0 | 7.5 m (24.6 feet) | 10084183 [1] | 2/0 | 3 m (9.8 feet) |
| 10083788 | 2/0 | 10 m (32.8 feet) | 10084184 [1] | 2/0 | 4.5 m (14.8 feet) |

| Part number | Type | Length | Part number | Type | Length |
|---|---|---|---|---|---|
| 10083789 | 2/0 | 15 m (49.2 feet) | 10084185 [1] | 2/0 | 7.5 m (24.6 feet) |
| 10083790 | 2/0 | 20 m (65.6 feet) | 10084186 [1] | 2/0 | 10 m (32.8 feet) |
| 10083791 | 2/0 | 25 m (82 feet) | 10084187 [1] | 2/0 | 15 m (49.2 feet) |
| 10082631 | 3/0 | 35 m (114.8 feet) | 10084188 [1] | 2/0 | 20 m (65.6 feet) |
| 10082634 | 3/0 | 45 m (147.6 feet) | 10084189 [1] | 2/0 | 25 m (82 feet) |

1 Leads labeled with CCC mark only. CCC is defined in Safety and EMC symbols and marks on page 38.

# Power cable, 120 VAC

These power cables are 3-position, male-female, 120 VAC cables.

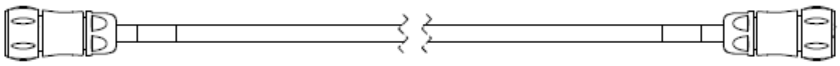

| Part number | Length | Part number | Length |
|---|---|---|---|
| 223436 | 3 m (9.8 feet) | 223446 | 25 m (82 feet) |
| 223437 | 4.5 m (14.8 feet) | 223447 | 35 m (114.8 feet) |
| 223439 | 7.5 m (24.6 feet) | 223448 | 45 m (147.6 feet) |
| 223441 | 10 m (32.8 feet) | 223449 | 60 m (196.9 feet) |
| 223444 | 15 m (49.2 feet) | 223450 | 75 m (246.1 feet) |
| 223445 | 20 m (65.6 feet) | - | - |

# Power cables, 220 VAC

These power cables are 7-position, male-female, 220 VAC cables.

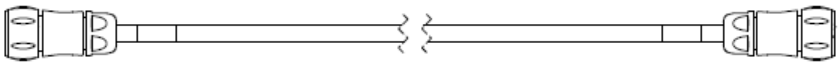

| Part number | Length | Part number | Length |
|---|---|---|---|
| 10083764 | 3.05 m (10 feet) | 10083765 | 4.57 m (15 feet) |

## Coolant-hose assemblies (cooler to gas connect console)

This hose assembly has an internal diameter of 1.27 cm (0.50 inch).

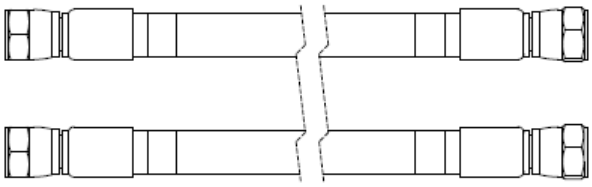

| Part number | Length | Part number | Length |
|---|---|---|---|
| 428475 | 3 m (9.8 feet) | 428481 | 25 m (82 feet) |
| 428476 | 4.5 m (14.8 feet) | 428482 | 35 m (114.8 feet) |
| 428477 | 7.5 m (24.6 feet) | 428483 | 45 m (147.6 feet) |
| 428478 | 10 m (32.8 feet) | 428484 | 60 m (196.9 feet) |
| 428479 | 15 m (49.2 feet) | 428485 | 75 m (246.1 feet) |
| 428480 | 20 m (65.6 feet) | - | - |

## Coolant-hose assemblies (cooler to plasma power supply)

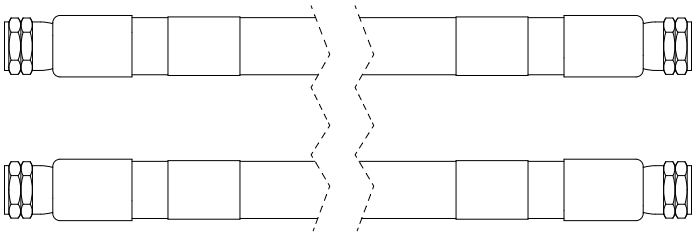

| Part number | Length | Part number | Length |
|---|---|---|---|
| 10083243 | 3 m (9.8 feet) | 10083794 | 4.5 m (14.8 feet) |

## CAN cables

CAN cables are 5-position, male-female. Two CAN cables are necessary.

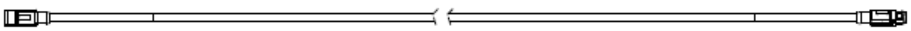

| Part number | Length | Part number | Length |
|---|---|---|---|
| 223417 | 3 m (9.8 feet) | 223427 | 25 m (82 feet) |
| 223418 | 4.5 m (14.8 feet) | 223428 | 35 m (114.8 feet) |
| 223420 | 7.5 m (24.6 feet) | 223429 | 45 m (147.6 feet) |
| 223422 | 10 m (32.8 feet) | 223430 | 60 m (196.9 feet) |
| 223425 | 15 m (49.2 feet) | 223431 | 75 m (246.1 feet) |
| 223426 | 20 m (65.6 feet) | - | - |

# Pilot-arc and coolant assemblies (Core, CorePlus)

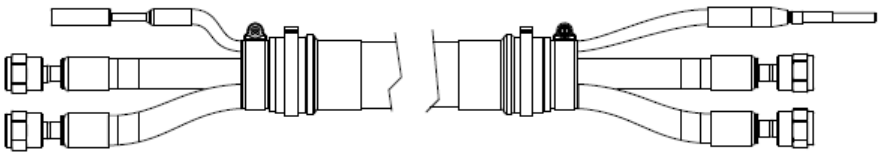

| Part number | Length | Part number | Length |
|---|---|---|---|
| 428454 | 3 m (9.8 feet) | 428458 | 10 m (32.8 feet) |
| 428455 | 4.5 m (14.8 feet) | 428459 | 15 m (49.2 feet) |
| 428456 | 6 m (19.7 feet) | - | - |
| 428457 | 7.5 m (24.6 feet) | - | - |

# Power, CAN, and 3-gas assemblies (Core)

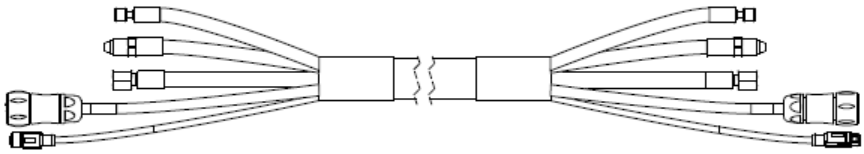

| Part number | Length | Part number | Length |
|---|---|---|---|
| 428464 | 3 m (9.8 feet) | 428468 | 10 m (32.8 feet) |
| 428465 | 4.5 m (14.8 feet) | 428469 | 15 m (49.2 feet) |
| 428466 | 6 m (19.7 feet) | - | - |
| 428467 | 7.5 m (24.6 feet) | - | - |

# Power, CAN, and 4-gas assemblies (CorePlus)

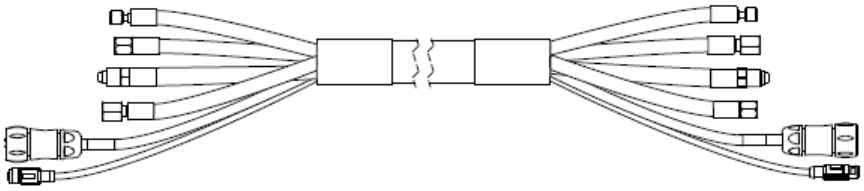

| Part number | Length | Part number | Length |
|---|---|---|---|
| 10079381 | 3 m (9.8 feet) | 10079385 | 10 m (32.8 feet) |
| 10079382 | 4.5 m (14.8 feet) | 10079386 | 15 m (49.2 feet) |
| 10079383 | 6 m (19.7 feet) | - | - |
| 10079384 | 7.5 m (24.6 feet) | - | - |

# Pilot-arc, coolant, and shield-water assemblies (VWI, OptiMix)

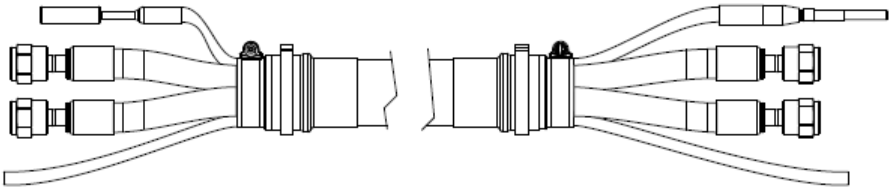

| Part number | Length | Part number | Length |
|---|---|---|---|
| 428353 | 3 m (9.8 feet) | 428357 | 10 m (32.8 feet) |
| 428354 | 4.5 m (14.8 feet) | 428358 | 15 m (49.2 feet) |
| 428355 | 6 m (19.7 feet) | - | - |
| 428356 | 7.5 m (24.6 feet) | - | - |

# Power, CAN, and 5-gas assemblies (VWI, OptiMix)

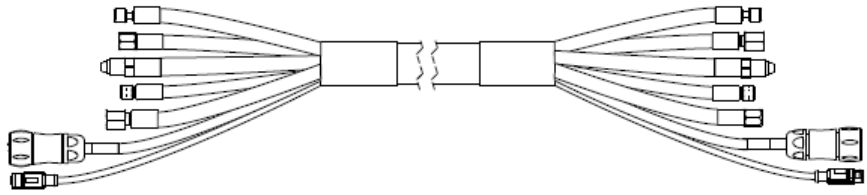

| Part number | Length | Part number | Length |
|---|---|---|---|
| 428363 | 3 m (9.8 feet) | 428367 | 10 m (32.8 feet) |
| 428364 | 4.5 m (14.8 feet) | 428368 | 15 m (49.2 feet) |
| 428365 | 6 m (19.7 feet) | - | - |
| 428366 | 7.5 m (24.6 feet) | - | - |

## EtherCAT CNC interface cables

The EtherCAT CNC interface cable has the following characteristics: RJ-45 connector, male-male, SF/UTP shield, 2 twisted pairs, 22 AWG.

For more information on EtherCAT cable specifications, refer to EtherCAT cable specifications on page 156.

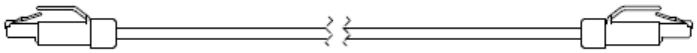

| Part number | Length | Part number | Length |
|---|---|---|---|
| 223506 | 0.3 m (1 foot) | 223512 | 10 m (32.8 feet) |
| 223507 | 0.6 m (2 feet) | 223513 | 15 m (49.2 feet) |
| 223508 | 1.5 m (4.9 feet) | 223514 | 22.5 m (73.8 feet) |
| 223672 | 2.5 m (8.2 feet) | 223515 | 30 m (98.4 feet) |
| 223509 | 3 m (9.8 feet) | 223516 | 45 m (147.6 feet) |
| 223510 | 6 m (19.7 feet) | 223517 | 60 m (196.9 feet) |
| 223511 | 7.5 m (24.6 feet) | 223714 | 75 m (246.1 feet) |

# Discrete CNC interface cables

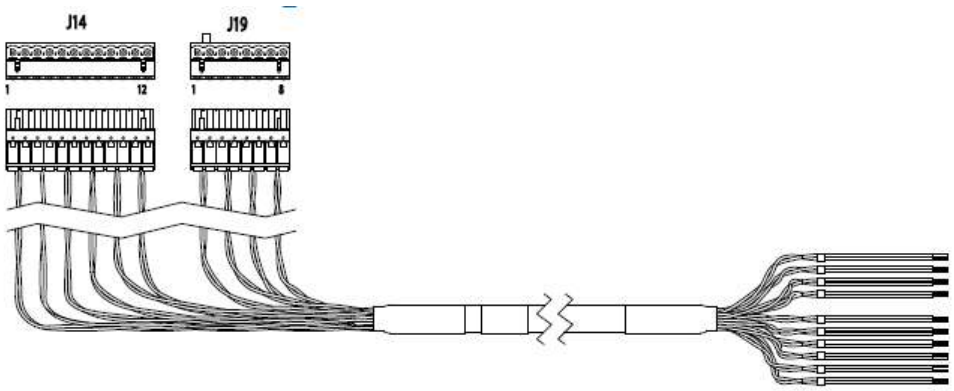


| Part number | Length | Part number | Length |
|---|---|---|---|
| 223691 | 3 m (9.8 feet) | 223700 | 20 m (65.6 feet) |
| 223692 | 4.5 m (14.8 feet) | 223701 | 22.5 m (73.8 feet) |
| 223693 | 6 m (19.7 feet) | 223702 | 25 m (82 feet) |
| 223694 | 7.5 m (24.6 feet) | 223703 | 30 m (98.4 feet) |
| 223695 | 10 m (32.8 feet) | 223704 | 35 m (114.8 feet) |
| 223696 | 12 m (39.4 feet) | 223705 | 37.5 m (123 feet) |
| 223697 | 13.5 m (44.3 feet) | 223706 | 45 m (147.6 feet) |
| 223698 | 15 m (49.2 feet) | 223707 | 60 m (196.9 feet) |
| 223699 | 16.5 m (54.1 feet) | 223708 | 75 m (246.1 feet) |

# Discrete cables for the expansion PCB

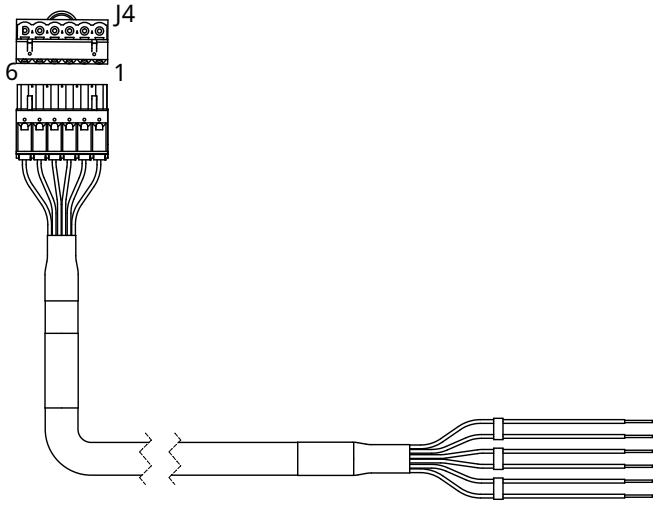

| Part number | Length | Part number | Length |
|---|---|---|---|
| 10083813 | 3 m (9.8 feet) | 10083823 | 20 m (65.6 feet) |
| 10083814 | 4.5 m (14.8 feet) | 10083824 | 22.5 m (73.8 feet) |
| 10083815 | 6 m (19.7 feet) | 10083825 | 25 m (82 feet) |
| 10083816 | 7.5 m (24.6 feet) | 10083826 | 30 m (98.4 feet) |
| 10083817 | 10 m (32.8 feet) | 10083827 | 35 m (114.8 feet) |
| 10083818 | 12 m (39.4 feet) | 10083828 | 37.5 m (123 feet) |
| 10083819 | 13.5 m (44.3 feet) | 10083829 | 45 m (147.6 feet) |
| 10083820 | 15 m (49.2 feet) | 10083830 | 60 m (196.9 feet) |
| 10083822 | 16.5 m (54.1 feet) | 10083831 | 75 m (246.1 feet) |

## Serial CNC interface cables

The serial CNC interface cables have the following characteristics: 9-position, D-subminiature (D-sub) connector, male-male, RS-422.

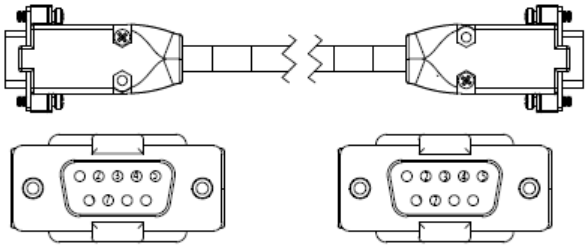

| Part number | Length | Part number | Length |
|---|---|---|---|
| 223673 | 3 m (9.8 feet) | 223682 | 20 m (65.6 feet) |
| 223674 | 4.5 m (14.8 feet) | 223683 | 22.5 m (73.8 feet) |
| 223675 | 6 m (19.7 feet) | 223684 | 25 m (82.0 feet) |
| 223676 | 7.5 m (24.6 feet) | 223685 | 30 m (98.4 feet) |
| 223677 | 10 m (32.8 feet) | 223686 | 35 m (114.8 feet) |
| 223678 | 12 m (39.4 feet) | 223687 | 37.5 m (123 feet) |
| 223679 | 13.5 m (44.3 feet) | 223688 | 45 m (147.6 feet) |
| 223680 | 15 m (49.2 feet) | 223689 | 60 m (196.9 feet) |
| 223681 | 16.5 m (54.1 feet) | 223690 | 75 m (246.1 feet) |

# Work cables

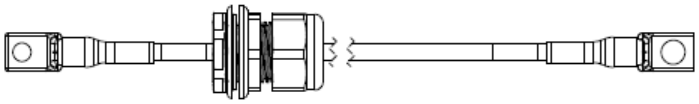

| Part number | Type | Length | Part number | Type | Length |
|---|---|---|---|---|---|
| 223628 | 2/0 | 3 m (9.8 feet) | 10082639 | 3/0 | 60 m (196.9 feet) |
| 223629 | 2/0 | 4.5 m (14.8 feet) | 10082640 | 3/0 | 75 m (246.1 feet) |
| 223630 | 2/0 | 7.5 m (24.6 feet) | 223661 [1] | 2/0 | 3 m (9.8 feet) |
| 223631 | 2/0 | 10 m (32.8 feet) | 223662 [1] | 2/0 | 4.5 m (14.8 feet) |
| 223632 | 2/0 | 15 m (49.2 feet) | 223663 [1] | 2/0 | 7.5 m (24.6 feet) |
| 223633 | 2/0 | 20 m (65.6 feet) | 223664 [1] | 2/0 | 10 m (32.8 feet) |
| 223634 | 2/0 | 25 m (82 feet) | 223665 [1] | 2/0 | 15 m (49.2 feet) |
| 10082637 | 3/0 | 35 m (114.8 feet) | 223666 [1] | 2/0 | 20 m (65.6 feet) |
| 10082638 | 3/0 | 45 m (147.6 feet) | 223667 [1] | 2/0 | 25 m (82 feet) |

1 Leads labeled with CCC mark only. CCC is defined in Safety and EMC symbols and marks on page 38.

# Torch leads

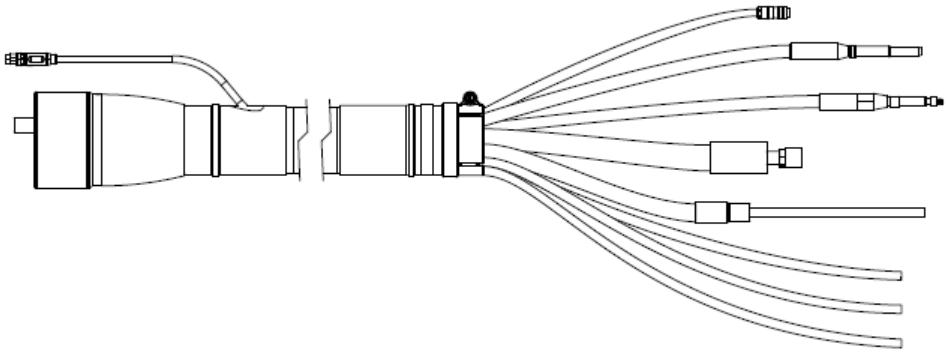

| Part number | Length | Part number | Length |
|---|---|---|---|
| 428383 | 2 m (6.6 feet) | 428386 | 3.5 m (11.5 feet) |
| 428384 | 2.5 m (8.2 feet) | 428824 | 4 m (13.1 feet) |
| 428385 | 3 m (9.8 feet) | 428387 | 4.5 m (14.8 feet) |

# Bevel torch leads

| Part number | Lead length | Strain relief length | Part number | Lead length | Strain relief length |
|---|---|---|---|---|---|
| 428825 | 2 m (6.6 feet) | 0.5 m (20 inches) | 428831 | 2 m (6.6 feet) | 1.2 m (48 inches) |
| 428826 | 2.5 m (8.2 feet) | | 428832 | 2.5 m (8.2 feet) | |
| 428827 | 3 m (9.8 feet) | | 428833 | 3 m (9.8 feet) | |
| 428828 | 3.5 m (11.5 feet) | | 428834 | 3.5 m (11.5 feet) | |
| 428829 | 4 m (13.1 feet) | | 428835 | 4 m (13.1 feet) | |
| 428830 | 4.5 m (14.8 feet) | | 428836 | 4.5 m (14.8 feet) | |

# Oxygen hoses (blue)

The oxygen hose has RH type "B" female fittings.

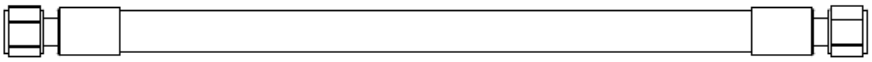

| Part number | Length | Part number | Length |
|---|---|---|---|
| 124003 | 3 m (9.8 feet) | 124009 | 25 m (82 feet) |
| 124004 | 4.5 m (14.8 feet) | 124107 | 30 m (98.4 feet) |
| 124005 | 7.5 m (24.6 feet) | 124010 | 35 m (114.8 feet) |
| 124006 | 10 m (32.8 feet) | 124011 | 45 m (147.6 feet) |
| 124007 | 15 m (49.2 feet) | 124012 | 60 m (196.9 feet) |
| 124008 | 20 m (65.6 feet) | 124013 | 75 m (246.1 feet) |

# Nitrogen or Argon hoses (black)

The nitrogen or argon hose has RH type "B" male fittings.

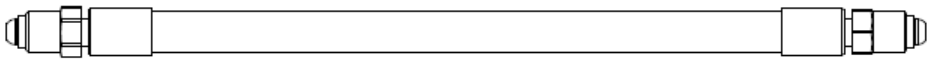

| Part number | Length | Part number | Length |
|---|---|---|---|
| 124014 | 3 m (9.8 feet) | 124020 | 25 m (82 feet) |
| 124015 | 4.5 m (14.8 feet) | 124108 | 30 m (98.4 feet) |
| 124016 | 7.5 m (24.6 feet) | 124021 | 35 m (114.8 feet) |
| 124017 | 10 m (32.8 feet) | 124022 | 45 m (147.6 feet) |
| 124018 | 15 m (49.2 feet) | 124023 | 60 m (196.9 feet) |
| 124019 | 20 m (65.6 feet) | 124024 | 75 m (246.1 feet) |

## Air hoses (black)

The air hose has JIC-6 female fittings.

| Part number | Length | Part number | Length |
|---|---|---|---|
| 124025 | 3 m (9.8 feet) | 124031 | 25 m (82 feet) |
| 124026 | 4.5 m (14.8 feet) | 124109 | 30 m (98.4 feet) |
| 124027 | 7.5 m (24.6 feet) | 124032 | 35 m (114.8 feet) |
| 124028 | 10 m (32.8 feet) | 124033 | 45 m (147.6 feet) |
| 124029 | 15 m (49.2 feet) | 124034 | 60 m (196.9 feet) |
| 124030 | 20 m (65.6 feet) | 124035 | 75 m (246.1 feet) |

## Hydrogen or nitrogen-hydrogen (F5) hoses (red)

The hydrogen or nitrogen-hydrogen (F5) hose has LH type "B" female fittings.

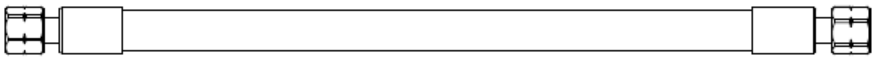

| Part number | Length | Part number | Length |
|---|---|---|---|
| 124036 | 3 m (9.8 feet) | 124042 | 25 m (82 feet) |
| 124037 | 4.5 m (14.8 feet) | 124110 | 30 m (98.4 feet) |
| 124038 | 7.5 m (24.6 feet) | 124043 | 35 m (114.8 feet) |

| Part number | Length | Part number | Length |
|---|---|---|---|
| 124039 | 10 m (32.8 feet) | 124044 | 45 m (147.6 feet) |
| 124040 | 15 m (49.2 feet) | 124045 | 60 m (196.9 feet) |
| 124041 | 20 m (65.6 feet) | 124046 | 75 m (246.1 feet) |

## Water (optional shield fluid) hoses (blue)

The water hose has JIC-6 female fittings.

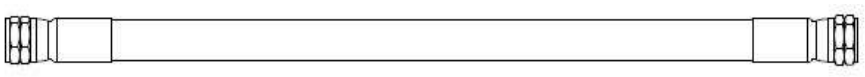

| Part number | Length | Part number | Length |
|---|---|---|---|
| 124047 | 3 m (9.8 feet) | 124053 | 25 m (82 feet) |
| 124048 | 4.5 m (14.8 feet) | 124111 | 30 m (98.4 feet) |
| 124049 | 7.5 m (24.6 feet) | 124054 | 35 m (114.8 feet) |
| 124050 | 10 m (32.8 feet) | 124055 | 45 m (147.6 feet) |
| 124051 | 15 m (49.2 feet) | 124056 | 60 m (196.9 feet) |
| 124052 | 20 m (65.6 feet) | 124057 | 75 m (246.1 feet) |

# Preventive maintenance kits

| Part number | Description |
|---|---|
| 428639 | Kit: Filter, torch rebuild without coolant |
| 428640 | Kit: Filter, torch rebuild with coolant |
| 428920 | Kit: Shield-fluid treatment |
| 10083902 | Kit: Electronics (200 V - 240 V) |
| 10083903 | Kit: Electronics (380 V - 600 V) |

# Tools

| Part number | Description |
|---|---|
| 229917 | TorchConnect console solenoid valve tool |
| 229918 | Torch solenoid valve tool |
| 104879 | 2.25 inch spanner wrench |
| 004630 | Pit depth gauge |
| 004629 | Gauge point |
| 10080745 | XPR consumable tool |
| 429013 | XPR electrode torque tool |
| 1-13897 (Hypertherm Waterjet part number) | TDS meter |

# Recommended spare parts

## Plasma power supply – recommended spare parts

Hypertherm recommends that you keep these parts available for the plasma power supply.

| Part number | Description | Designator | Quantity |
|---|---|---|---|
| 428810 | Shield-fluid treatment filter | - | 1 |
| 229640 | Power source: 88 VAC - 264 VAC to 24 VDC | PS1 | 1 |
| 10082976 | Power source: 48 VDC with bracket | PS2 | 1 |
| 10085251 | Chopper assembly | Chopper 1,<br>Chopper 2,<br>Chopper 3 | 1 |
| 10084334 | Control PCB | PCB1 | 1 |
| 10085206 | I/OPCB | PCB5 | 1 |
| 141384 | Fan power distribution PCB | PCB6 | 1 |
| 141577 | Power distribution PCB | PCB7 | 1 |
| 108709 | Fuse:10 A, 250 VAC, time delay (on PCB7) | F3, F4, F5 | 2 |

| Part number | Description | Designator | Quantity |
|---|---|---|---|
| 208397 | Fuse: 15 A, 600 V, Class R (used in 200 V, 208 V, 220 V, 240 V) | F1, F2 | 2 |
| 208395 | Fuse: 8 A, 600 V, Class R (used in 380 V, 400 V, 415 V, 440 V, 480 V, 600 V) | | 2 |
| 003277 | Pilot arc relay: 24 VDC, coil, 60 A 28 VDC contacts | CR1 | 1 |
| 003297 | Inrush contactor: 80 A, IEC AC-3, 3-phase, 120 VAC | IR_CON | 1 |
| 10084340 | Main contactor (200 V, 208 V, 220 V, 240 V) | M_CON | 1 |
| 10084339 | Main contactor assembly (380 V, 400 V, 415 V, 440 V, 480 V, 600 V) | | 1 |

## Cooler – recommended spare parts

Hypertherm recommends that you keep these parts available for the cooler.

| Part number | Description | Designator | Quantity |
|---|---|---|---|
| 027005 | Coolant filter (fine) | - | 1 |
| 006113 | Coolant check valve | - | 1 |
| 141384 | Fan power distribution PCB | PCB3 | 1 |
| 141524 | Cooler control PCB | PCB2 | 1 |
| 028872 | Coolant | - | _ [1] |

1 Refer to Calculations for total coolant volume estimates on page 263.

## Gas connect consoles – recommended spare parts

Hypertherm recommends that you keep these parts available for the gas connect consoles.

| Part number | Description | Designator | Quantity |
|---|---|---|---|
| 011110 | Air filter element | - | 1 |
| 223398 | Pressure transducer (VWI and OptiMix only) | P6 - P9 | 1 |
| 006167 | Proportional valve (VWI and OptiMix only) | B4 - B5 | 1 |
| 141563 | High-frequency, high-voltage ignition PCB | PCB2 | 1 |
| 141595 | Spark gap PCB for ignition PCB | - | 1 |

## TorchConnect console – recommended spare parts

Hypertherm recommends that you keep these parts available for the TorchConnect console.

| Part number | Description | Designator | Quantity |
|---|---|---|---|
| 141368 | Ohmic contact PCB | PCB2 | 1 |
| 223477 | Pressure transducer with wire and connector | P1 - P5, P14 | 1 |
| 006167 | Proportional valve | B1 - B3 | 1 |
| 229965 | Solenoid valve | V4 - V12 | 1 |

## Torch – recommended spare parts

Hypertherm recommends that you keep these parts available for the torch.

| Part number | Description | Designator | Quantity |
|---|---|---|---|
| 420220 | Quick-disconnect/torch receptacle | - | 1 |
| 420221 | Quick-disconnect torch | - | 1 |
| 420368 | Water tube | - | 1 |
| 006155 | Torch solenoid valve | - | 1 |
| 428639 | Kit: Filter, torch rebuild without coolant | - | 1 |
| 428640 | Kit: Filter, torch rebuild with coolant | - | 1 |

# Descriptions of warning label icons

This warning label is affixed to some plasma power supplies. It is important that the operator and maintenance technician understand the intent of these warning symbols as described.

The numbered text in the table corresponds to the numbered boxes on the label.

| | |
|---|---|
| 1. | Cutting sparks can cause explosion or fire. |
| 1.1 | Do not cut near flammables. |
| 1.2 | Have a fire extinguisher nearby and ready to use. |
| 1.3 | Do not use a drum or other closed container as a cutting table. |
| 2. | Plasma arc can injure and burn; point the nozzle away from yourself. Arc starts instantly when triggered. |
| 2.1 | Turn off power before disassembling torch. |
| 2.2 | Do not grip the workpiece near the cutting path. |
| 2.3 | Wear complete body protection. |
| 3. | Hazardous voltage. Risk of electric shock or burn. |
| 3.1 | Wear insulating gloves. Replace gloves when wet or damaged. |
| 3.2 | Protect from shock by insulating yourself from work and ground. |
| 3.3 | Disconnect power before servicing. Do not touch live parts. |
| 4. | Plasma fumes can be hazardous. |
| 4.1 | Do not inhale fumes. |
| 4.2 | Use forced ventilation or local exhaust to remove the fumes. |
| 4.3 | Do not operate in closed spaces. Remove fumes with ventilation. |
| 5. | Arc rays can burn eyes and injure skin. |
| 5.1 | Wear correct and appropriate protective equipment to protect head, eyes, ears, hands, and body. Button shirt collar. Protect ears from noise. Use welding helmet with the correct shade of filter. |
| 6. | Become trained. Only qualified personnel should operate this equipment. Use torches specified in the manual. Keep nonqualified personnel and children away. |
| 7. | Do not remove, destroy, or cover this label. Replace if it is missing, damaged, or worn. |

# 10 Wiring Diagrams

## Wiring diagram conventions

When you look for a signal path on the wiring diagrams, use the following conventions to find the path where it continues on a different sheet or at a different location on the same sheet:

- Sheet numbers are in the lower right corner of each sheet.
- References to other locations use the following connection symbol and conventions.

Use the sheet number to find the reference sheet. Align the coordinates A–D on the Y axis with the numbers 1–4 on the X axis of each sheet to find the reference blocks (similar to a road map).

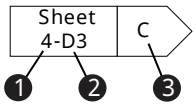


**1** Sheet number

**2** Coordinates

**3** Reference block

## Wiring diagram symbols

These symbols are used in the wiring diagrams to represent elements of the plasma cutting system and torch.

| | | | | | |
|---|---|---|---|---|---|
| | Battery | | Ground clamp | | Receptacle |
| | Cap, polarized | | Ground, chassis | | Relay, coil |
| | Cap, not polarized | | Ground, earth | | Relay, normally closed |

Cap, feed-through

Circuit breaker

Coax shield

Current sensor

Current sensor

DC supply

Diode

Door interlock

Fan

Feed-through LC

Filter, AC

Fuse

Switch, pressure, normally open

Switch, 1 pole, 1 throw

Switch, 1 pole, 2 throw

Switch, 1 pole, 2 throw, center off

Switch, temperature, normally closed

Switch, temperature, normally open

Terminal block

Time delay closed, NC/off

IGBT

Inductor

LED

Lamp

MOV

Pin

Socket

Plug

PNP transistor

Potentiometer

Push button, normally closed

Push button, normally open

Time delay open, NO/off

Time delay open, NC/on

Time delay closed, NO/off

Transformer

Transformer, air core

Transformer, coil

Triac

VAC source

Relay, normally open

Relay, solid state, AC

Relay, solid state, DC

Relay, solid state

Resistor

SCR

Shield

Shunt

Spark gap

Switch, flow

Switch, level, normally closed

Switch, pressure, normally closed

Valve, solenoid

Voltage source

Zener diode

### Torch symbols

Electrode

Nozzle

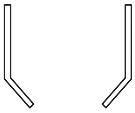

Shield

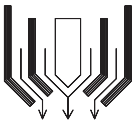

Torch

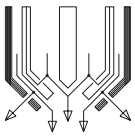

Torch, HyDefinition

## Valve states during operation

During each stage of cutting system operation, different valves are active (ON) or inactive (OFF). The type of gas connect console and the type and timing of the active process changes the valves that are active or inactive.

Refer to the CNC or XPR web interface to see the most current information about the state (ON-OFF) of each valve:

- For information about how to view valve states on the CNC, refer to the instruction manual that came with your CNC.
- To view valve states on the XPR web interface:
  - a Use the XPR web interface to select the process you want to view.
  - b Go to the **Gas System** screen.

    Refer to Gas system screen on page 192. On this screen you can see which valves are active when the gas is flowing. Active valves are indicated with a gray highlight.

  - c On the **Gas System** screen, enable the desired mode (**Test Preflow**, **Test Pierceflow**, or **Test**

**Cutflow**) for the process you want to view.

## Valve states by process ID

The table shows whether the valve is active (ON) or inactive (OFF) for different types of blocks (preflow, cutflow, piercing) and gases in certain processes.

**Table 36 -** Valve states by process ID

| Process IDs: 1001, 1002, 1003, 1004, 1005, 1151, 1152, 1153, 1155, 1156 | | | | | | | | | | | | | | | | | | | |
|---|---|---|---|---|---|---|---|---|---|---|---|---|---|---|---|---|---|---|---|
| Block type | Gas | V1 | V4 | V5 | V6 | V7 | V8 | V9 | V10 | V11 | V12 | B1 | B2 | B3 | B4 | B5 | B8 | B9 | B10 |
| Preflow | $N_2$/Air | Off | Off | Off | **On** | Off | Off | **On** | Off | Off | Off | **On** | **On** | Off | Off | Off | Off | Off | Off |
| Cutflow | $O_2$/Air | **On** | Off | Off | **On** | Off | Off | **On** | Off | **On** | **On** | Off | **On** | **On** | Off | Off | Off | Off | Off |
| Piercing | $O_2$/Air | **On** | Off | Off | **On** | Off | Off | **On** | Off | Off | **On** | Off | **On** | **On** | Off | Off | Off | Off | Off |

| Process IDs: 7001, 7004, 7005, 7007, 7008, 7009, 7010, 7011, 7012, 7013, 7018, 7020 | | | | | | | | | | | | | | | | | | | |
|---|---|---|---|---|---|---|---|---|---|---|---|---|---|---|---|---|---|---|---|
| Block type | Gas | V1 | V4 | V5 | V6 | V7 | V8 | V9 | V10 | V11 | V12 | B1 | B2 | B3 | B4 | B5 | B8 | B9 | B10 |
| Preflow | $N_2$/Air | Off | Off | Off | **On** | Off | Off | **On** | Off | Off | Off | **On** | **On** | Off | Off | Off | Off | Off | Off |
| Cutflow | $O_2$/$O_2$ | **On** | Off | Off | Off | **On** | Off | **On** | Off | **On** | **On** | Off | **On** | **On** | Off | Off | Off | Off | Off |
| Piercing | $O_2$/Air | **On** | Off | Off | **On** | Off | Off | **On** | Off | Off | **On** | Off | **On** | **On** | Off | Off | Off | Off | Off |

| Process IDs: 8001 | | | | | | | | | | | | | | | | | | | |
|---|---|---|---|---|---|---|---|---|---|---|---|---|---|---|---|---|---|---|---|
| Block type | Gas | V1 | V4 | V5 | V6 | V7 | V8 | V9 | V10 | V11 | V12 | B1 | B2 | B3 | B4 | B5 | B8 | B9 | B10 |
| Preflow | $N_2$/$N_2$ | Off | Off | **On** | Off | Off | Off | **On** | Off | Off | Off | **On** | **On** | Off | Off | Off | Off | Off | Off |
| Cutflow | $N_2$/$N_2$ | Off | Off | **On** | Off | Off | Off | **On** | Off | **On** | Off | **On** | **On** | Off | Off | Off | Off | Off | Off |
| Piercing | $N_2$/$N_2$ | Off | Off | **On** | Off | Off | Off | **On** | Off | Off | Off | **On** | **On** | Off | Off | Off | Off | Off | Off |

**Table 36 -** Valve states by process ID (continued)

| Process IDs: 9001, 9010, 9018 | | | | | | | | | | | | | | | | | | |
|---|---|---|---|---|---|---|---|---|---|---|---|---|---|---|---|---|---|---|
| Block type | Gas | V1 | V4 | V5 | V6 | V7 | V8 | V9 | V10 | V11 | V12 | B1 | B2 | B3 | B4 | B5 | B8 | B9 | B10 |
| Preflow | Ar/Air | Off | Off | Off | **On** | Off | **On** | Off | Off | **On** | Off | **On** | **On** | Off | Off | Off | Off | Off | Off |
| Cutflow | Ar/Air | Off | Off | Off | **On** | Off | **On** | Off | Off | **On** | Off | **On** | **On** | Off | Off | Off | Off | Off | Off |
| Piercing | Ar/Air | Off | Off | Off | **On** | Off | **On** | Off | Off | **On** | Off | **On** | **On** | Off | Off | Off | Off | Off | Off |

| Process IDs: 2051, 2054, 2057, 2100, 8004, 8005, 8006 | | | | | | | | | | | | | | | | | | |
|---|---|---|---|---|---|---|---|---|---|---|---|---|---|---|---|---|---|---|
| Block type | Gas | V1 | V4 | V5 | V6 | V7 | V8 | V9 | V10 | V11 | V12 | B1 | B2 | B3 | B4 | B5 | B8 | B9 | B10 |
| Preflow | $N_2/N_2$ | Off | Off | **On** | Off | Off | Off | Off | Off | Off | Off | **On** | **On** | Off | Off | Off | Off | Off | Off |
| Cutflow | $N_2/N_2$ | Off | Off | **On** | Off | Off | Off | Off | Off | Off | Off | **On** | **On** | Off | Off | Off | Off | Off | Off |
| Piercing | $N_2/N_2$ | Off | Off | **On** | Off | Off | Off | Off | Off | Off | Off | **On** | **On** | Off | Off | Off | Off | Off | Off |

| Process IDs: 2010, 2011, 2028, 2029, 2052, 2055, 2058 | | | | | | | | | | | | | | | | | | |
|---|---|---|---|---|---|---|---|---|---|---|---|---|---|---|---|---|---|---|
| Block type | Gas | V1 | V4 | V5 | V6 | V7 | V8 | V9 | V10 | V11 | V12 | B1 | B2 | B3 | B4 | B5 | B8 | B9 | B10 |
| Preflow | $N_2$/H2O | Off | Off | Off | Off | Off | Off | Off | Off | Off | Off | **On** | **On** | Off | Off | **On** | Off | Off | Off |
| Cutflow | $N_2$/H2O | Off | Off | Off | Off | Off | Off | Off | Off | Off | Off | **On** | **On** | Off | Off | **On** | Off | Off | Off |
| Piercing | $N_2$/H2O | Off | Off | Off | Off | Off | Off | Off | Off | Off | Off | **On** | **On** | Off | Off | **On** | Off | Off | Off |

**Table 36 -** Valve states by process ID (continued)

| Process IDs: 2053, 2056, 2059, 2060, 2061, 2062, 2063, 2064, 2065, 2066 | | | | | | | | | | | | | | | | | | | |
|---|---|---|---|---|---|---|---|---|---|---|---|---|---|---|---|---|---|---|---|
| Block type | Gas | V1 | V4 | V5 | V6 | V7 | V8 | V9 | V10 | V11 | V12 | B1 | B2 | B3 | B4 | B5 | B8 | B9 | B10 |
| Preflow | $N_2/N_2$ | Off | Off | **On** | Off | Off | Off | Off | Off | Off | Off | **On** | **On** | Off | Off | Off | Off | Off | Off |
| Cutflow | $Mix/N_2$ | **On** | Off | **On** | Off | Off | Off | Off | **On** | Off | Off | Off | **On** | Off | Off | Off | **On** | **On** | **On** |
| Piercing | $Mix/N_2$ | **On** | Off | **On** | Off | Off | Off | Off | **On** | Off | Off | Off | **On** | Off | Off | Off | **On** | **On** | **On** |

| Process IDs: 1201, 1203, 1206, 1251, 1252, 1253, 1254, 1255, 1281, 1282, 1283, 1284, 1285, 1286, 1287 | | | | | | | | | | | | | | | | | | | |
|---|---|---|---|---|---|---|---|---|---|---|---|---|---|---|---|---|---|---|---|
| Block type | Gas | V1 | V4 | V5 | V6 | V7 | V8 | V9 | V10 | V11 | V12 | B1 | B2 | B3 | B4 | B5 | B8 | B9 | B10 |
| Preflow | $N_2/Air$ | Off | Off | Off | **On** | Off | Off | **On** | Off | Off | Off | **On** | **On** | Off | Off | Off | Off | Off | Off |
| Cutflow | $O_2/Air$ | **On** | Off | Off | **On** | Off | Off | **On** | Off | Off | **On** | Off | **On** | **On** | Off | Off | Off | Off | Off |
| Piercing | $O_2/Air$ | **On** | Off | Off | **On** | Off | Off | **On** | Off | Off | **On** | Off | **On** | **On** | Off | Off | Off | Off | Off |

| Process IDs: 1051, 7014, 7015 | | | | | | | | | | | | | | | | | | | |
|---|---|---|---|---|---|---|---|---|---|---|---|---|---|---|---|---|---|---|---|
| Block type | Gas | V1 | V4 | V5 | V6 | V7 | V8 | V9 | V10 | V11 | V12 | B1 | B2 | B3 | B4 | B5 | B8 | B9 | B10 |
| Preflow | $N_2/O_2$ | Off | Off | Off | Off | **On** | Off | **On** | Off | Off | Off | **On** | **On** | Off | Off | Off | Off | Off | Off |
| Cutflow | $O_2/O_2$ | **On** | Off | Off | Off | **On** | Off | **On** | Off | **On** | **On** | Off | **On** | **On** | Off | Off | Off | Off | Off |
| Piercing | $O_2/O_2$ | **On** | Off | Off | Off | **On** | Off | **On** | Off | Off | **On** | Off | **On** | **On** | Off | Off | Off | Off | Off |

**Table 36 -** Valve states by process ID (continued)

| Process IDs: 1101, 1102 | | | | | | | | | | | | | | | | | | | |
|---|---|---|---|---|---|---|---|---|---|---|---|---|---|---|---|---|---|---|---|
| Block type | Gas | V1 | V4 | V5 | V6 | V7 | V8 | V9 | V10 | V11 | V12 | B1 | B2 | B3 | B4 | B5 | B8 | B9 | B10 |
| Preflow | $N_2$/Air | Off | Off | Off | **On** | Off | Off | **On** | Off | Off | Off | **On** | **On** | Off | Off | Off | Off | Off | Off |
| Cutflow | $O_2$/Air | **On** | Off | Off | **On** | Off | Off | **On** | Off | Off | Off | Off | **On** | **On** | Off | Off | Off | Off | Off |
| Piercing | $O_2$/Air | **On** | Off | Off | **On** | Off | Off | **On** | Off | Off | Off | Off | **On** | **On** | Off | Off | Off | Off | Off |

| Process IDs: 1103, 1104, 1105, 1106, 1107 | | | | | | | | | | | | | | | | | | | |
|---|---|---|---|---|---|---|---|---|---|---|---|---|---|---|---|---|---|---|---|
| Block type | Gas | V1 | V4 | V5 | V6 | V7 | V8 | V9 | V10 | V11 | V12 | B1 | B2 | B3 | B4 | B5 | B8 | B9 | B10 |
| Preflow | $N_2$/Air | Off | Off | Off | **On** | Off | Off | **On** | Off | Off | Off | **On** | **On** | Off | Off | Off | Off | Off | Off |
| Cutflow | $O_2$/Air | **On** | Off | Off | **On** | Off | Off | **On** | Off | **On** | Off | Off | **On** | **On** | Off | Off | Off | Off | Off |
| Piercing | $O_2$/Air | **On** | Off | Off | **On** | Off | Off | **On** | Off | Off | Off | Off | **On** | **On** | Off | Off | Off | Off | Off |

| Process IDs: 7002, 7003, 7006 | | | | | | | | | | | | | | | | | | | |
|---|---|---|---|---|---|---|---|---|---|---|---|---|---|---|---|---|---|---|---|
| Block type | Gas | V1 | V4 | V5 | V6 | V7 | V8 | V9 | V10 | V11 | V12 | B1 | B2 | B3 | B4 | B5 | B8 | B9 | B10 |
| Preflow | $N_2$/Air | Off | Off | Off | **On** | Off | Off | **On** | Off | Off | Off | **On** | **On** | Off | Off | Off | Off | Off | Off |
| Cutflow | $O_2/O_2$ | **On** | Off | Off | Off | **On** | Off | **On** | Off | **On** | Off | Off | **On** | **On** | Off | Off | Off | Off | Off |
| Piercing | $O_2$/Air | **On** | Off | Off | **On** | Off | Off | **On** | Off | Off | Off | Off | **On** | **On** | Off | Off | Off | Off | Off |

**Table 36 -** Valve states by process ID (continued)

| Process IDs: 2001, 2002, 2003, 2004, 2005 | | | | | | | | | | | | | | | | | | | |
|---|---|---|---|---|---|---|---|---|---|---|---|---|---|---|---|---|---|---|---|
| Block type | Gas | V1 | V4 | V5 | V6 | V7 | V8 | V9 | V10 | V11 | V12 | B1 | B2 | B3 | B4 | B5 | B8 | B9 | B10 |
| Preflow | $N_2/N_2$ | Off | Off | **On** | Off | Off | Off | Off | **On** | Off | Off | **On** | **On** | Off | **On** | Off | Off | Off | Off |
| Cutflow | $F5/N_2$ | **On** | Off | **On** | Off | Off | Off | Off | **On** | **On** | Off | Off | **On** | Off | **On** | Off | Off | Off | Off |
| Piercing | $F5/N_2$ | **On** | Off | **On** | Off | Off | Off | Off | **On** | **On** | Off | Off | **On** | Off | **On** | Off | Off | Off | Off |

| Process IDs: 2006, 2007, 2012, 2013, 2014, 2015, 2024, 2025, 2026 | | | | | | | | | | | | | | | | | | | |
|---|---|---|---|---|---|---|---|---|---|---|---|---|---|---|---|---|---|---|---|
| Block type | Gas | V1 | V4 | V5 | V6 | V7 | V8 | V9 | V10 | V11 | V12 | B1 | B2 | B3 | B4 | B5 | B8 | B9 | B10 |
| Preflow | $N_2/N_2$ | Off | Off | **On** | Off | Off | Off | Off | Off | Off | Off | **On** | **On** | Off | Off | Off | Off | Off | Off |
| Cutflow | $N_2/N_2$ | Off | Off | **On** | Off | Off | Off | Off | Off | **On** | Off | **On** | **On** | Off | Off | Off | Off | Off | Off |
| Piercing | $N_2/N_2$ | Off | Off | **On** | Off | Off | Off | Off | Off | **On** | Off | **On** | **On** | Off | Off | Off | Off | Off | Off |

| Process IDs: 2008, 2009 | | | | | | | | | | | | | | | | | | | |
|---|---|---|---|---|---|---|---|---|---|---|---|---|---|---|---|---|---|---|---|
| Block type | Gas | V1 | V4 | V5 | V6 | V7 | V8 | V9 | V10 | V11 | V12 | B1 | B2 | B3 | B4 | B5 | B8 | B9 | B10 |
| Preflow | $N_2/Air$ | Off | Off | Off | **On** | Off | Off | Off | Off | Off | Off | **On** | **On** | Off | Off | Off | Off | Off | Off |
| Cutflow | Air/Air | **On** | Off | Off | **On** | Off | Off | Off | Off | **On** | Off | Off | **On** | **On** | Off | Off | Off | Off | Off |
| Piercing | $Air/N_2$ | **On** | Off | **On** | Off | Off | Off | Off | Off | **On** | Off | Off | **On** | **On** | Off | Off | Off | Off | Off |

**Table 36 -** Valve states by process ID (continued)

| Process IDs: 2016, 2017, 2018, 2019 | | | | | | | | | | | | | | | | | | | |
|---|---|---|---|---|---|---|---|---|---|---|---|---|---|---|---|---|---|---|---|
| Block type | Gas | V1 | V4 | V5 | V6 | V7 | V8 | V9 | V10 | V11 | V12 | B1 | B2 | B3 | B4 | B5 | B8 | B9 | B10 |
| Preflow | $N_2$/Air | Off | Off | Off | **On** | Off | Off | Off | Off | Off | Off | **On** | **On** | Off | Off | Off | Off | Off | Off |
| Cutflow | Air/Air | **On** | Off | Off | **On** | Off | Off | Off | Off | **On** | Off | Off | **On** | **On** | Off | Off | Off | Off | Off |
| Piercing | Air/Air | **On** | Off | Off | **On** | Off | Off | Off | Off | **On** | Off | Off | **On** | **On** | Off | Off | Off | Off | Off |

| Process IDs: 2020, 2021, 2022, 2023 | | | | | | | | | | | | | | | | | | | |
|---|---|---|---|---|---|---|---|---|---|---|---|---|---|---|---|---|---|---|---|
| Block type | Gas | V1 | V4 | V5 | V6 | V7 | V8 | V9 | V10 | V11 | V12 | B1 | B2 | B3 | B4 | B5 | B8 | B9 | B10 |
| Preflow | $N_2/N_2$ | Off | Off | **On** | Off | Off | Off | Off | **On** | Off | Off | **On** | **On** | Off | **On** | Off | Off | Off | Off |
| Cutflow | F5/$N_2$ | **On** | Off | **On** | Off | Off | Off | Off | **On** | Off | Off | Off | **On** | Off | **On** | Off | Off | Off | Off |
| Piercing | F5/$N_2$ | **On** | Off | **On** | Off | Off | Off | Off | **On** | Off | Off | Off | **On** | Off | **On** | Off | Off | Off | Off |

| Process IDs: 9004, 9005, 9006, 9014, 9015, 9016, 9017 | | | | | | | | | | | | | | | | | | | |
|---|---|---|---|---|---|---|---|---|---|---|---|---|---|---|---|---|---|---|---|
| Block type | Gas | V1 | V4 | V5 | V6 | V7 | V8 | V9 | V10 | V11 | V12 | B1 | B2 | B3 | B4 | B5 | B8 | B9 | B10 |
| Preflow | Ar/$N_2$ | Off | Off | **On** | Off | Off | **On** | Off | Off | Off | Off | **On** | **On** | Off | Off | Off | Off | Off | Off |
| Cutflow | Ar/$N_2$ | Off | Off | **On** | Off | Off | **On** | Off | Off | Off | Off | **On** | **On** | Off | Off | Off | Off | Off | Off |
| Piercing | Ar/$N_2$ | Off | Off | **On** | Off | Off | **On** | Off | Off | Off | Off | **On** | **On** | Off | Off | Off | Off | Off | Off |

**Table 36 -** Valve states by process ID (continued)

| Process IDs: 8007, 8010 | | | | | | | | | | | | | | | | | | | |
|---|---|---|---|---|---|---|---|---|---|---|---|---|---|---|---|---|---|---|---|
| Block type | Gas | V1 | V4 | V5 | V6 | V7 | V8 | V9 | V10 | V11 | V12 | B1 | B2 | B3 | B4 | B5 | B8 | B9 | B10 |
| Preflow | $N_2$/Air | Off | Off | Off | **On** | Off | Off | **On** | Off | Off | Off | **On** | **On** | Off | Off | Off | Off | Off | Off |
| Cutflow | $N_2$/Air | Off | Off | Off | **On** | Off | Off | **On** | Off | Off | Off | **On** | **On** | Off | Off | Off | Off | Off | Off |
| Piercing | $N_2$/Air | Off | Off | Off | **On** | Off | Off | **On** | Off | Off | Off | **On** | **On** | Off | Off | Off | Off | Off | Off |

| Process IDs: 9007, 9019 | | | | | | | | | | | | | | | | | | | |
|---|---|---|---|---|---|---|---|---|---|---|---|---|---|---|---|---|---|---|---|
| Block type | Gas | V1 | V4 | V5 | V6 | V7 | V8 | V9 | V10 | V11 | V12 | B1 | B2 | B3 | B4 | B5 | B8 | B9 | B10 |
| Preflow | Ar/Air | Off | Off | Off | **On** | Off | **On** | **On** | Off | **On** | Off | **On** | **On** | Off | Off | Off | Off | Off | Off |
| Cutflow | Ar/Air | Off | Off | Off | **On** | Off | **On** | **On** | Off | **On** | Off | **On** | **On** | Off | Off | Off | Off | Off | Off |
| Piercing | Ar/Air | Off | Off | Off | **On** | Off | **On** | **On** | Off | **On** | Off | **On** | **On** | Off | Off | Off | Off | Off | Off |

| Process IDs: 9008 | | | | | | | | | | | | | | | | | | | |
|---|---|---|---|---|---|---|---|---|---|---|---|---|---|---|---|---|---|---|---|
| Block type | Gas | V1 | V4 | V5 | V6 | V7 | V8 | V9 | V10 | V11 | V12 | B1 | B2 | B3 | B4 | B5 | B8 | B9 | B10 |
| Preflow | Ar/Air | Off | Off | Off | **On** | Off | **On** | Off | Off | Off | Off | **On** | **On** | Off | Off | Off | Off | Off | Off |
| Cutflow | Ar/Air | Off | Off | Off | **On** | Off | **On** | Off | Off | Off | Off | **On** | **On** | Off | Off | Off | Off | Off | Off |
| Piercing | Ar/$N_2$ | Off | Off | **On** | Off | Off | **On** | Off | Off | Off | Off | **On** | **On** | Off | Off | Off | Off | Off | Off |

**Table 36 -** Valve states by process ID (continued)

| Process IDs: 9002, 9003, 9009 | | | | | | | | | | | | | | | | | | | |
|---|---|---|---|---|---|---|---|---|---|---|---|---|---|---|---|---|---|---|---|
| Block type | Gas | V1 | V4 | V5 | V6 | V7 | V8 | V9 | V10 | V11 | V12 | B1 | B2 | B3 | B4 | B5 | B8 | B9 | B10 |
| Preflow | $Ar/N_2$ | Off | Off | **On** | Off | Off | **On** | Off | Off | **On** | Off | **On** | **On** | Off | Off | Off | Off | Off | Off |
| Cutflow | $Ar/N_2$ | Off | Off | **On** | Off | Off | **On** | Off | Off | **On** | Off | **On** | **On** | Off | Off | Off | Off | Off | Off |
| Piercing | $Ar/N_2$ | Off | Off | **On** | Off | Off | **On** | Off | Off | **On** | Off | **On** | **On** | Off | Off | Off | Off | Off | Off |

| Process IDs: 1202, 1204 | | | | | | | | | | | | | | | | | | | |
|---|---|---|---|---|---|---|---|---|---|---|---|---|---|---|---|---|---|---|---|
| Block type | Gas | V1 | V4 | V5 | V6 | V7 | V8 | V9 | V10 | V11 | V12 | B1 | B2 | B3 | B4 | B5 | B8 | B9 | B10 |
| Preflow | $N_2/N_2$ | Off | Off | **On** | Off | Off | Off | **On** | Off | Off | Off | **On** | **On** | Off | Off | Off | Off | Off | Off |
| Cutflow | $O_2/N_2$ | **On** | Off | **On** | Off | Off | Off | **On** | Off | Off | **On** | Off | **On** | **On** | Off | Off | Off | Off | Off |
| Piercing | $O_2/N_2$ | **On** | Off | **On** | Off | Off | Off | **On** | Off | Off | **On** | Off | **On** | **On** | Off | Off | Off | Off | Off |

| Process IDs: 2027, 2101 | | | | | | | | | | | | | | | | | | | |
|---|---|---|---|---|---|---|---|---|---|---|---|---|---|---|---|---|---|---|---|
| Block type | Gas | V1 | V4 | V5 | V6 | V7 | V8 | V9 | V10 | V11 | V12 | B1 | B2 | B3 | B4 | B5 | B8 | B9 | B10 |
| Preflow | $N_2$/Air | Off | Off | Off | **On** | Off | Off | Off | Off | Off | Off | **On** | **On** | Off | Off | Off | Off | Off | Off |
| Cutflow | Air/Air | **On** | Off | Off | **On** | Off | Off | Off | Off | **On** | Off | Off | **On** | **On** | Off | Off | Off | Off | Off |
| Piercing | Air/Air | **On** | Off | Off | **On** | Off | Off | Off | Off | Off | Off | Off | **On** | **On** | Off | Off | Off | Off | Off |

**Table 36 -** Valve states by process ID (continued)

| Process IDs: 8002 | | | | | | | | | | | | | | | | | | | |
|---|---|---|---|---|---|---|---|---|---|---|---|---|---|---|---|---|---|---|---|
| Block type | Gas | V1 | V4 | V5 | V6 | V7 | V8 | V9 | V10 | V11 | V12 | B1 | B2 | B3 | B4 | B5 | B8 | B9 | B10 |
| Preflow | $N_2/N_2$ | Off | Off | **On** | Off | Off | Off | Off | Off | **On** | Off | **On** | **On** | Off | Off | Off | Off | Off | Off |
| Cutflow | $N_2/N_2$ | Off | Off | **On** | Off | Off | Off | Off | Off | **On** | Off | **On** | **On** | Off | Off | Off | Off | Off | Off |
| Piercing | $N_2/N_2$ | Off | Off | **On** | Off | Off | Off | Off | Off | **On** | Off | **On** | **On** | Off | Off | Off | Off | Off | Off |

| Process IDs: 1205 | | | | | | | | | | | | | | | | | | | |
|---|---|---|---|---|---|---|---|---|---|---|---|---|---|---|---|---|---|---|---|
| Block type | Gas | V1 | V4 | V5 | V6 | V7 | V8 | V9 | V10 | V11 | V12 | B1 | B2 | B3 | B4 | B5 | B8 | B9 | B10 |
| Preflow | $N_2/N_2$ | Off | Off | **On** | Off | Off | Off | **On** | Off | Off | Off | **On** | **On** | Off | Off | Off | Off | Off | Off |
| Cutflow | $O_2/N_2$ | **On** | Off | **On** | Off | Off | Off | **On** | Off | Off | **On** | Off | **On** | **On** | Off | Off | Off | Off | Off |
| Piercing | $O_2/Ar$ | **On** | **On** | Off | Off | Off | Off | **On** | Off | Off | **On** | Off | **On** | **On** | Off | Off | Off | Off | Off |

| Process IDs: 1207 | | | | | | | | | | | | | | | | | | | |
|---|---|---|---|---|---|---|---|---|---|---|---|---|---|---|---|---|---|---|---|
| Block type | Gas | V1 | V4 | V5 | V6 | V7 | V8 | V9 | V10 | V11 | V12 | B1 | B2 | B3 | B4 | B5 | B8 | B9 | B10 |
| Preflow | $N_2/Air$ | Off | Off | Off | **On** | Off | Off | **On** | Off | Off | Off | **On** | **On** | Off | Off | Off | Off | Off | Off |
| Cutflow | $O_2/Air$ | **On** | Off | Off | **On** | Off | Off | **On** | Off | Off | **On** | Off | **On** | **On** | Off | Off | Off | Off | Off |
| Piercing | $O_2/N_2$ | **On** | Off | **On** | Off | Off | Off | **On** | Off | Off | **On** | Off | **On** | **On** | Off | Off | Off | Off | Off |

**Table 36 -** Valve states by process ID (continued)

| Process IDs: 9011, 9012, 9013 | | | | | | | | | | | | | | | | | | | |
|---|---|---|---|---|---|---|---|---|---|---|---|---|---|---|---|---|---|---|---|
| Block type | Gas | V1 | V4 | V5 | V6 | V7 | V8 | V9 | V10 | V11 | V12 | B1 | B2 | B3 | B4 | B5 | B8 | B9 | B10 |
| Preflow | $Ar/N_2$ | Off | Off | **On** | Off | Off | **On** | Off | Off | **On** | Off | **On** | **On** | Off | Off | Off | Off | Off | Off |
| Cutflow | $Ar/N_2$ | Off | Off | **On** | Off | Off | **On** | Off | Off | Off | Off | **On** | **On** | Off | Off | Off | Off | Off | Off |
| Piercing | $Ar/N_2$ | Off | Off | **On** | Off | Off | **On** | Off | Off | Off | Off | **On** | **On** | Off | Off | Off | Off | Off | Off |

| Process IDs: 1060, 1061, 7016, 7017 | | | | | | | | | | | | | | | | | | | |
|---|---|---|---|---|---|---|---|---|---|---|---|---|---|---|---|---|---|---|---|
| Block type | Gas | V1 | V4 | V5 | V6 | V7 | V8 | V9 | V10 | V11 | V12 | B1 | B2 | B3 | B4 | B5 | B8 | B9 | B10 |
| Preflow | $N_2/Air$ | Off | Off | Off | **On** | Off | Off | **On** | Off | **On** | Off | **On** | **On** | Off | Off | Off | Off | Off | Off |
| Cutflow | $O_2/Air$ | **On** | Off | Off | **On** | Off | Off | **On** | Off | **On** | **On** | Off | **On** | **On** | Off | Off | Off | Off | Off |
| Piercing | $O_2/Air$ | **On** | Off | Off | **On** | Off | Off | **On** | Off | **On** | **On** | Off | **On** | **On** | Off | Off | Off | Off | Off |

| Process IDs: 1157 | | | | | | | | | | | | | | | | | | | |
|---|---|---|---|---|---|---|---|---|---|---|---|---|---|---|---|---|---|---|---|
| Block type | Gas | V1 | V4 | V5 | V6 | V7 | V8 | V9 | V10 | V11 | V12 | B1 | B2 | B3 | B4 | B5 | B8 | B9 | B10 |
| Preflow | $N_2/Air$ | Off | Off | Off | **On** | Off | Off | **On** | Off | Off | Off | **On** | **On** | Off | Off | Off | Off | Off | Off |
| Cutflow | $O_2/Air$ | **On** | Off | Off | **On** | Off | Off | **On** | Off | **On** | **On** | Off | **On** | **On** | Off | Off | Off | Off | Off |
| Piercing | $O_2/Ar$ | **On** | **On** | Off | Off | Off | Off | **On** | Off | Off | **On** | Off | **On** | **On** | Off | Off | Off | Off | Off |

**Table 36 -** Valve states by process ID (continued)

| Process IDs: 7019 | | | | | | | | | | | | | | | | | | | |
|---|---|---|---|---|---|---|---|---|---|---|---|---|---|---|---|---|---|---|---|
| Block type | Gas | V1 | V4 | V5 | V6 | V7 | V8 | V9 | V10 | V11 | V12 | B1 | B2 | B3 | B4 | B5 | B8 | B9 | B10 |
| Preflow | $N_2/O_2$ | Off | Off | Off | Off | **On** | Off | **On** | Off | **On** | Off | **On** | **On** | Off | Off | Off | Off | Off | Off |
| Cutflow | $O_2/O_2$ | **On** | Off | Off | Off | **On** | Off | **On** | Off | **On** | **On** | Off | **On** | **On** | Off | Off | Off | Off | Off |
| Piercing | $O_2$/Air | **On** | Off | Off | **On** | Off | Off | **On** | Off | Off | **On** | Off | **On** | **On** | Off | Off | Off | Off | Off |

| Process IDs: 1288 | | | | | | | | | | | | | | | | | | | |
|---|---|---|---|---|---|---|---|---|---|---|---|---|---|---|---|---|---|---|---|
| Block type | Gas | V1 | V4 | V5 | V6 | V7 | V8 | V9 | V10 | V11 | V12 | B1 | B2 | B3 | B4 | B5 | B8 | B9 | B10 |
| Preflow | $N_2$/Air | Off | Off | Off | **On** | Off | Off | **On** | Off | Off | Off | **On** | **On** | Off | Off | Off | Off | Off | Off |
| Cutflow | $O_2$/Air | **On** | Off | Off | **On** | Off | Off | **On** | Off | Off | **On** | Off | **On** | **On** | Off | Off | Off | Off | Off |
| Piercing | $O_2$/Ar | **On** | **On** | Off | Off | Off | Off | **On** | Off | Off | **On** | Off | **On** | **On** | Off | Off | Off | Off | Off |

| Process IDs: 1289 | | | | | | | | | | | | | | | | | | | |
|---|---|---|---|---|---|---|---|---|---|---|---|---|---|---|---|---|---|---|---|
| Block type | Gas | V1 | V4 | V5 | V6 | V7 | V8 | V9 | V10 | V11 | V12 | B1 | B2 | B3 | B4 | B5 | B8 | B9 | B10 |
| Preflow | $N_2$/Air | Off | Off | Off | **On** | Off | Off | **On** | Off | Off | Off | **On** | **On** | Off | Off | Off | Off | Off | Off |
| Cutflow | $O_2$/Ar | **On** | **On** | Off | Off | Off | Off | **On** | Off | Off | **On** | Off | **On** | **On** | Off | Off | Off | Off | Off |
| Piercing | $O_2$/Ar | **On** | **On** | Off | Off | Off | Off | **On** | Off | Off | **On** | Off | **On** | **On** | Off | Off | Off | Off | Off |

**Table 36 -** Valve states by process ID (continued)

| Process IDs: 2071, 2073, 2075 | | | | | | | | | | | | | | | | | | | |
|---|---|---|---|---|---|---|---|---|---|---|---|---|---|---|---|---|---|---|---|
| Block type | Gas | V1 | V4 | V5 | V6 | V7 | V8 | V9 | V10 | V11 | V12 | B1 | B2 | B3 | B4 | B5 | B8 | B9 | B10 |
| Preflow | $N_2/N_2$ | Off | Off | **On** | Off | Off | Off | Off | **On** | Off | Off | **On** | **On** | Off | Off | Off | **On** | **On** | **On** |
| Cutflow | Mix/$N_2$ | **On** | Off | **On** | Off | Off | Off | Off | **On** | Off | **On** | Off | **On** | Off | Off | Off | **On** | **On** | **On** |
| Piercing | Mix/$N_2$ | **On** | Off | **On** | Off | Off | Off | Off | **On** | Off | **On** | Off | **On** | Off | Off | Off | **On** | **On** | **On** |

| Process IDs: 2072, 2074 | | | | | | | | | | | | | | | | | | | |
|---|---|---|---|---|---|---|---|---|---|---|---|---|---|---|---|---|---|---|---|
| Block type | Gas | V1 | V4 | V5 | V6 | V7 | V8 | V9 | V10 | V11 | V12 | B1 | B2 | B3 | B4 | B5 | B8 | B9 | B10 |
| Preflow | $N_2/N_2$ | Off | Off | **On** | Off | Off | Off | Off | **On** | Off | Off | **On** | **On** | Off | Off | Off | **On** | **On** | **On** |
| Cutflow | Mix/$N_2$ | **On** | Off | **On** | Off | Off | Off | Off | **On** | Off | **On** | Off | **On** | Off | Off | Off | **On** | **On** | **On** |
| Piercing | Mix/Ar | **On** | Off | **On** | Off | Off | Off | Off | **On** | Off | **On** | Off | **On** | Off | Off | Off | **On** | **On** | **On** |

| Process IDs: 2076 | | | | | | | | | | | | | | | | | | | |
|---|---|---|---|---|---|---|---|---|---|---|---|---|---|---|---|---|---|---|---|
| Block type | Gas | V1 | V4 | V5 | V6 | V7 | V8 | V9 | V10 | V11 | V12 | B1 | B2 | B3 | B4 | B5 | B8 | B9 | B10 |
| Preflow | $N_2$/Ar | Off | Off | **On** | Off | Off | Off | Off | **On** | Off | Off | **On** | **On** | Off | Off | Off | **On** | **On** | **On** |
| Cutflow | Mix/Ar | **On** | Off | **On** | Off | Off | Off | Off | **On** | Off | **On** | Off | **On** | Off | Off | Off | **On** | **On** | **On** |
| Piercing | Mix/Ar | **On** | Off | **On** | Off | Off | Off | Off | **On** | Off | **On** | Off | **On** | Off | Off | Off | **On** | **On** | **On** |

**Table 36 -** Valve states by process ID (continued)

| | | | | | | | | | | | | | | | | | | | | |
|---|---|---|---|---|---|---|---|---|---|---|---|---|---|---|---|---|---|---|---|---|
| | Process IDs: 8011 | | | | | | | | | | | | | | | | | | | |
| | Block type | Gas | V1 | V4 | V5 | V6 | V7 | V8 | V9 | V10 | V11 | V12 | B1 | B2 | B3 | B4 | B5 | B8 | B9 | B10 |
| | Preflow | $N_2/N_2$ | Off | Off | **On** | Off | Off | Off | Off | Off | **On** | Off | **On** | **On** | Off | Off | Off | Off | Off | Off |
| | Cutflow | $N_2/N_2$ | Off | Off | **On** | Off | Off | Off | Off | Off | **On** | Off | **On** | **On** | Off | Off | Off | Off | Off | Off |
| | Piercing | $N_2/N_2$ | Off | Off | **On** | Off | Off | Off | Off | Off | Off | Off | **On** | **On** | Off | Off | Off | Off | Off | Off |
| | | | | | | | | | | | | | | | | | | | | |
| | Process IDs: 9020, 9021 | | | | | | | | | | | | | | | | | | | |
| | Block type | Gas | V1 | V4 | V5 | V6 | V7 | V8 | V9 | V10 | V11 | V12 | B1 | B2 | B3 | B4 | B5 | B8 | B9 | B10 |
| | Preflow | $Ar/N_2$ | Off | Off | **On** | Off | Off | **On** | Off | Off | **On** | Off | **On** | **On** | Off | Off | Off | Off | Off | Off |
| | Cutflow | $Ar/N_2$ | Off | Off | **On** | Off | Off | **On** | Off | Off | **On** | Off | **On** | **On** | Off | Off | Off | Off | Off | Off |
| | Piercing | $Ar/N_2$ | Off | Off | **On** | Off | Off | **On** | Off | Off | Off | Off | **On** | **On** | Off | Off | Off | Off | Off | Off |

# Overview (Sheet 1 of 25)

This page is blank.

This page is blank.

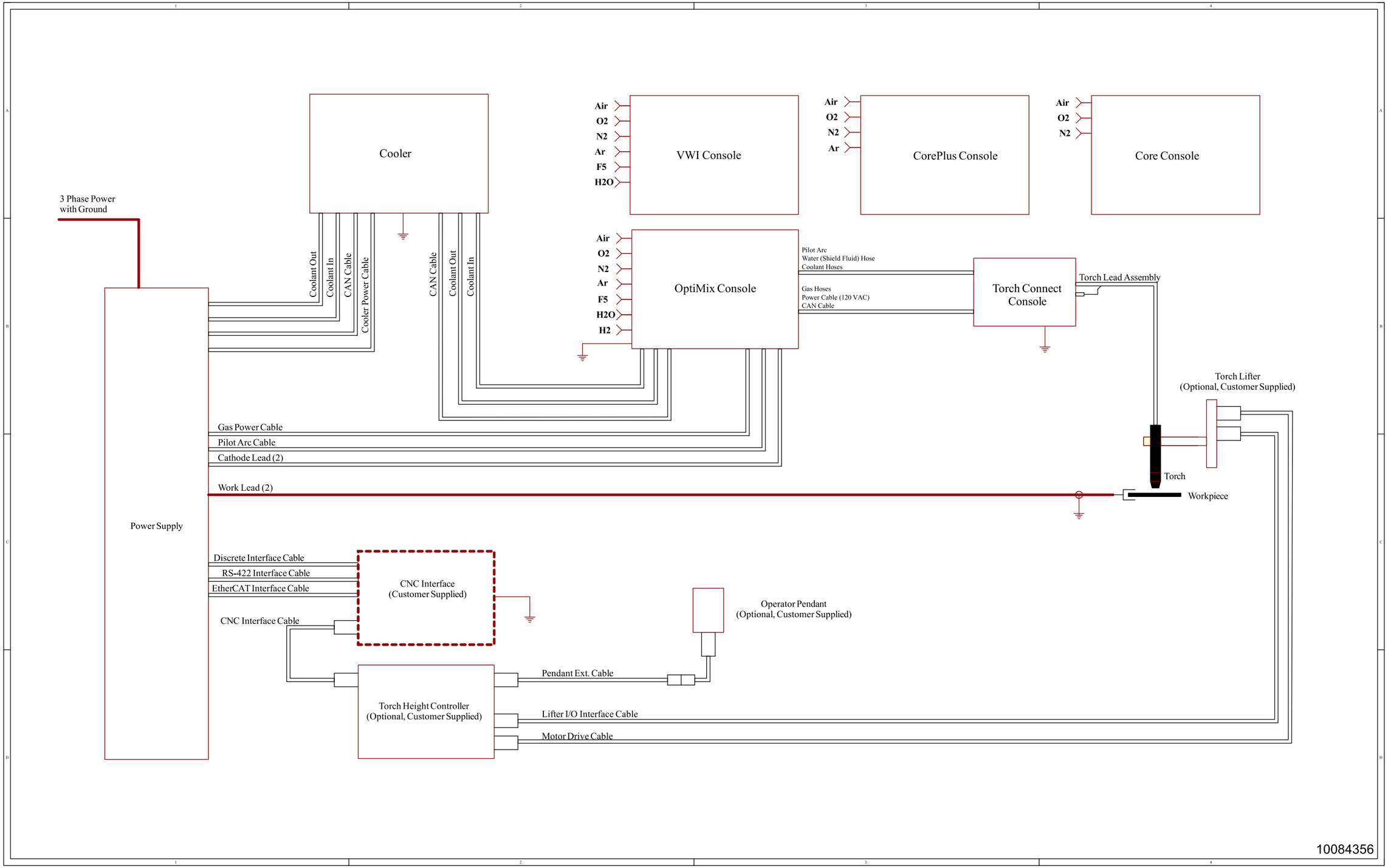
Cooler
Air
O2
N2
Ar
F5
H2O
VWI Console
Air
O2
N2
Ar
CorePlus Console
Air
O2
N2
Core Console
3 Phase Power
with Ground
Coolant Out
Coolant In
CAN Cable
Cooler Power Cable
CAN Cable
Coolant Out
Coolant In
Air
O2
N2
Ar
F5
H2O
H2
OptiMix Console
Pilot Arc
Water (Shield Fluid) Hose
Coolant Hoses
Gas Hoses
Power Cable (120 VAC)
CAN Cable
Torch Connect
Console
Torch Lead Assembly
Torch Lifter
(Optional, Customer Supplied)
Torch
Workpiece
Gas Power Cable
Pilot Arc Cable
Cathode Lead (2)
Work Lead (2)
Power Supply
Discrete Interface Cable
RS-422 Interface Cable
EtherCAT Interface Cable
CNC Interface
(Customer Supplied)
CNC Interface Cable
Operator Pendant
(Optional, Customer Supplied)
Pendant Ext. Cable
Torch Height Controller
(Optional, Customer Supplied)
Lifter I/O Interface Cable
Motor Drive Cable
10084356

# Plasma power supply 1 (Sheet 2 of 25)

This page is blank.

This page is blank.

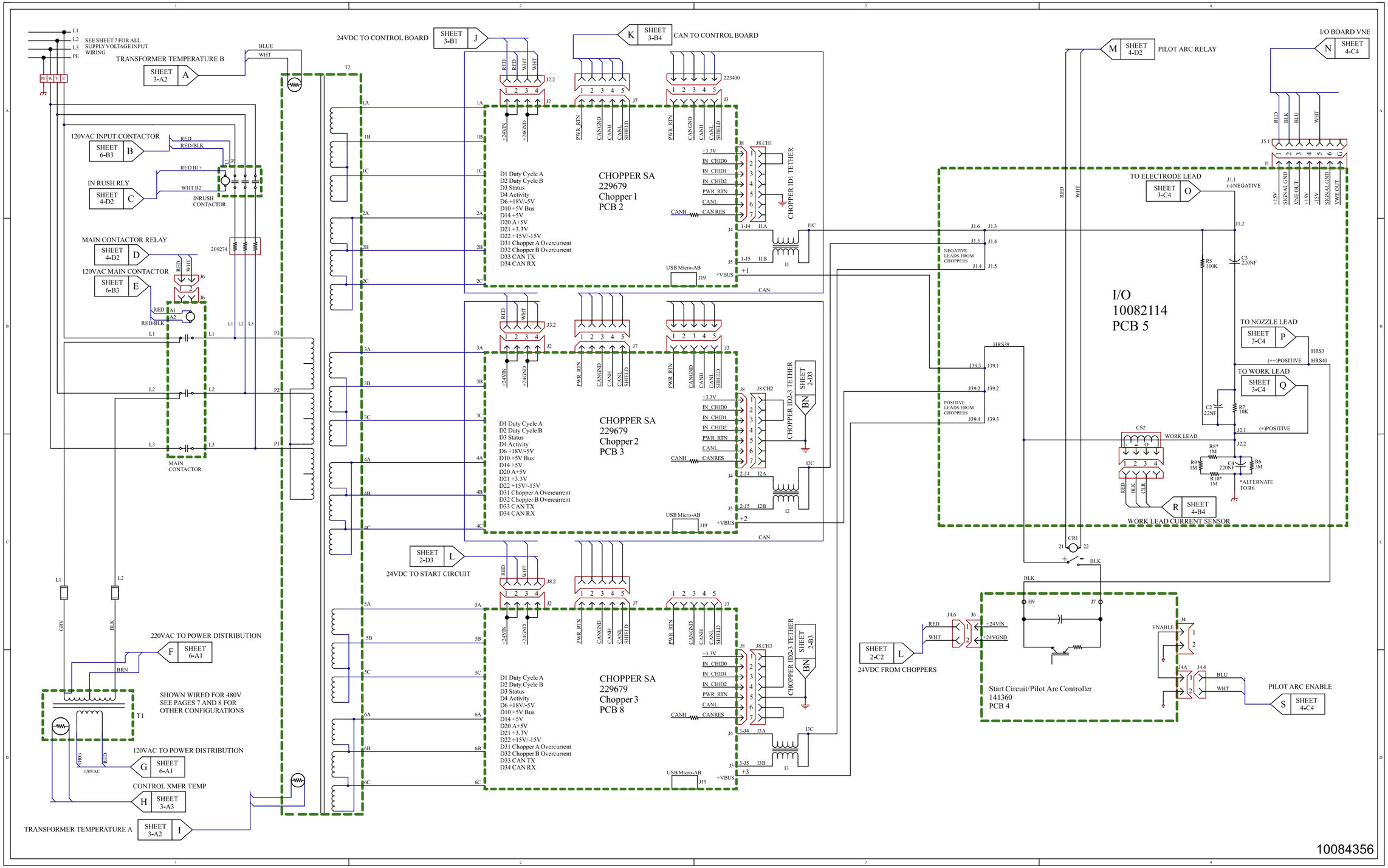
SEE SHEET 7 FOR ALL SUPPLY VOLTAGE INPUT WIRING
TRANSFORMER TEMPERATURE B
SHEET 3-A2
24VDC TO CONTROL BOARD
SHEET 3-B1
CAN TO CONTROL BOARD
SHEET 3-B4
PILOT ARC RELAY
SHEET 4-D2
I/O BOARD VNE
SHEET 4-C4
120VAC INPUT CONTACTOR
SHEET 6-B3
IN RUSH RLY
SHEET 4-D2
INRUSH CONTACTOR
MAIN CONTACTOR RELAY
SHEET 4-D2
120VAC MAIN CONTACTOR
SHEET 6-B3
MAIN CONTACTOR
CHOPPER SA 229679 Chopper 1 PCB 2
CHOPPER SA 229679 Chopper 2 PCB 3
CHOPPER SA 229679 Chopper 3 PCB 8
D1 Duty Cycle A
D2 Duty Cycle B
D3 Status
D4 Activity
D6 +18V/-5V
D10 +5V Bus
D14 +5V
D20 A+5V
D21 +3.3V
D22 +15V/-15V
D31 Chopper A Overcurrent
D32 Chopper B Overcurrent
D33 CAN TX
D34 CAN RX
CHOPPER ID1 TETHER
CHOPPER ID2-3 TETHER
SHEET 2-D3
SHEET 2-B3
24VDC TO START CIRCUIT
TO ELECTRODE LEAD
SHEET 3-C4
TO NOZZLE LEAD
SHEET 3-C4
TO WORK LEAD
SHEET 3-C4
WORK LEAD
WORK LEAD CURRENT SENSOR
SHEET 4-B4
*ALTERNATE TO R6
NEGATIVE LEADS FROM CHOPPERS
POSITIVE LEADS FROM CHOPPERS
I/O 10082114 PCB 5
220VAC TO POWER DISTRIBUTION
SHEET 6-A1
SHOWN WIRED FOR 480V SEE PAGES 7 AND 8 FOR OTHER CONFIGURATIONS
120VAC TO POWER DISTRIBUTION
SHEET 6-A1
CONTROL XMFR TEMP
SHEET 3-A3
TRANSFORMER TEMPERATURE A
SHEET 3-A2
24VDC FROM CHOPPERS
SHEET 2-C2
Start Circuit/Pilot Arc Controller 141360 PCB 4
PILOT ARC ENABLE
SHEET 4-C4
10084356

# Plasma power supply 2 (Sheet 3 of 25)

This page is blank.

This page is blank.

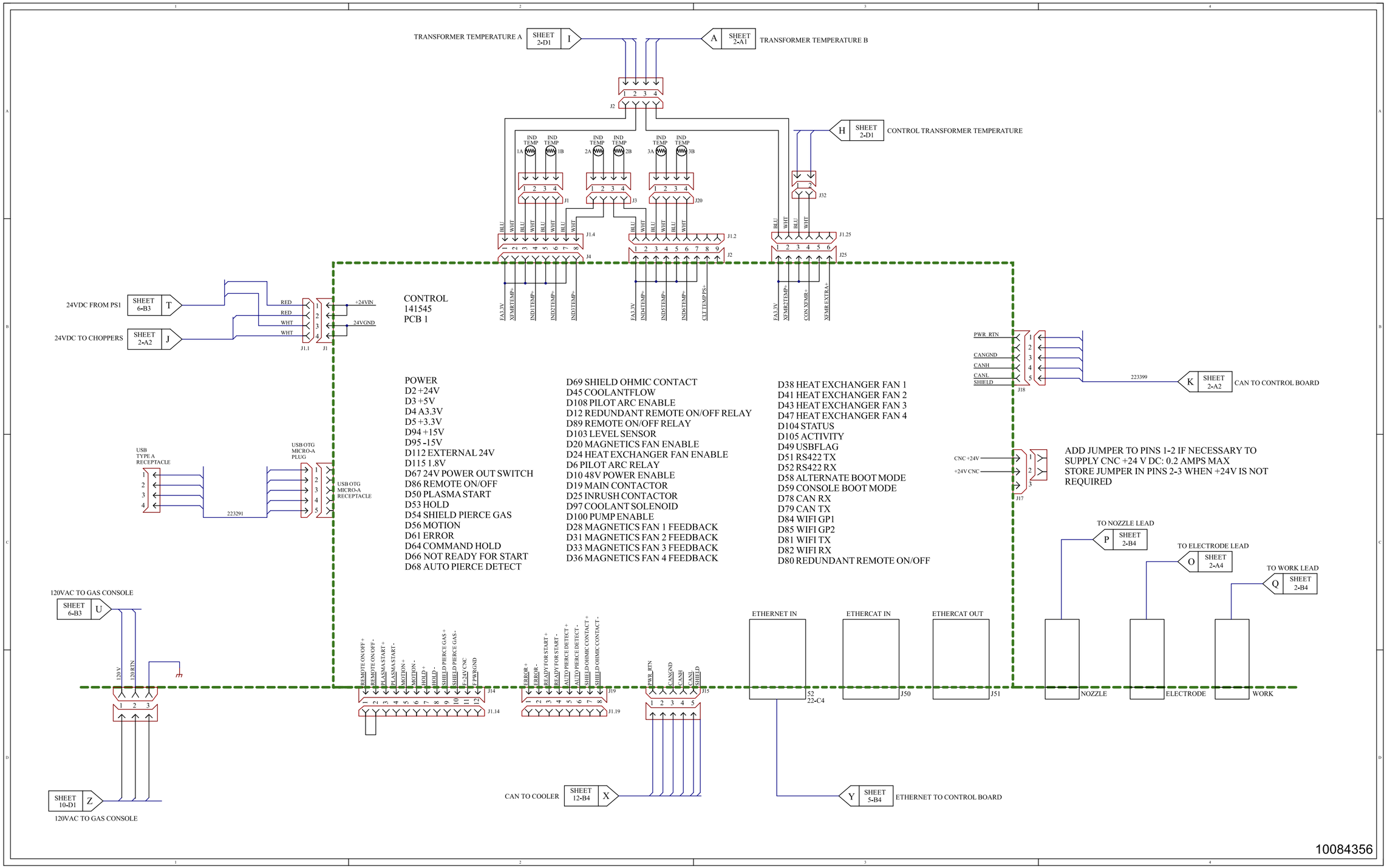
TRANSFORMER TEMPERATURE A
SHEET 2-D1
I
A
SHEET 2-A1
TRANSFORMER TEMPERATURE B
J2
H
SHEET 2-D1
CONTROL TRANSFORMER TEMPERATURE
IND TEMP
1A
1B
2A
2B
3A
3B
J1
J3
J20
J32
J1.4
J1.2
J1.25
J4
J2
J25
24VDC FROM PS1
SHEET 6-B3
T
24VDC TO CHOPPERS
SHEET 2-A2
J
RED
WHT
+24VIN
24VGND
J1.1
J1
CONTROL
141545
PCB 1
POWER
D2 +24V
D3 +5V
D4 A3.3V
D5 +3.3V
D94 +15V
D95 -15V
D112 EXTERNAL 24V
D115 1.8V
D67 24V POWER OUT SWITCH
D86 REMOTE ON/OFF
D50 PLASMA START
D53 HOLD
D54 SHIELD PIERCE GAS
D56 MOTION
D61 ERROR
D64 COMMAND HOLD
D66 NOT READY FOR START
D68 AUTO PIERCE DETECT
D69 SHIELD OHMIC CONTACT
D45 COOLANTFLOW
D108 PILOT ARC ENABLE
D12 REDUNDANT REMOTE ON/OFF RELAY
D89 REMOTE ON/OFF RELAY
D103 LEVEL SENSOR
D20 MAGNETICS FAN ENABLE
D24 HEAT EXCHANGER FAN ENABLE
D6 PILOT ARC RELAY
D10 48V POWER ENABLE
D19 MAIN CONTACTOR
D25 INRUSH CONTACTOR
D97 COOLANT SOLENOID
D100 PUMP ENABLE
D28 MAGNETICS FAN 1 FEEDBACK
D31 MAGNETICS FAN 2 FEEDBACK
D33 MAGNETICS FAN 3 FEEDBACK
D36 MAGNETICS FAN 4 FEEDBACK
D38 HEAT EXCHANGER FAN 1
D41 HEAT EXCHANGER FAN 2
D43 HEAT EXCHANGER FAN 3
D47 HEAT EXCHANGER FAN 4
D104 STATUS
D105 ACTIVITY
D49 USBFLAG
D51 RS422 TX
D52 RS422 RX
D58 ALTERNATE BOOT MODE
D59 CONSOLE BOOT MODE
D78 CAN RX
D79 CAN TX
D84 WIFI GP1
D85 WIFI GP2
D81 WIFI TX
D82 WIFI RX
D80 REDUNDANT REMOTE ON/OFF
PWR RTN
CANGND
CANH
CANL
SHIELD
J18
223399
K
SHEET 2-A2
CAN TO CONTROL BOARD
USB TYPE A RECEPTACLE
USB OTG MICRO-A PLUG
USB OTG MICRO-A RECEPTACLE
223291
CNC +24V
+24V CNC
J17
ADD JUMPER TO PINS 1-2 IF NECESSARY TO SUPPLY CNC +24 V DC: 0.2 AMPS MAX
STORE JUMPER IN PINS 2-3 WHEN +24V IS NOT REQUIRED
TO NOZZLE LEAD
P
SHEET 2-B4
TO ELECTRODE LEAD
O
SHEET 2-A4
TO WORK LEAD
Q
SHEET 2-B4
120VAC TO GAS CONSOLE
SHEET 6-B3
U
120V
120RTN
J14
J1.14
J19
J1.19
J15
ETHERNET IN
ETHERCAT IN
ETHERCAT OUT
52
22-C4
J50
J51
NOZZLE
ELECTRODE
WORK
SHEET 10-D1
Z
120VAC TO GAS CONSOLE
CAN TO COOLER
SHEET 12-B4
X
Y
SHEET 5-B4
ETHERNET TO CONTROL BOARD
10084356

# Plasma power supply 3 (Sheet 4 of 25)

This page is blank.

This page is blank.

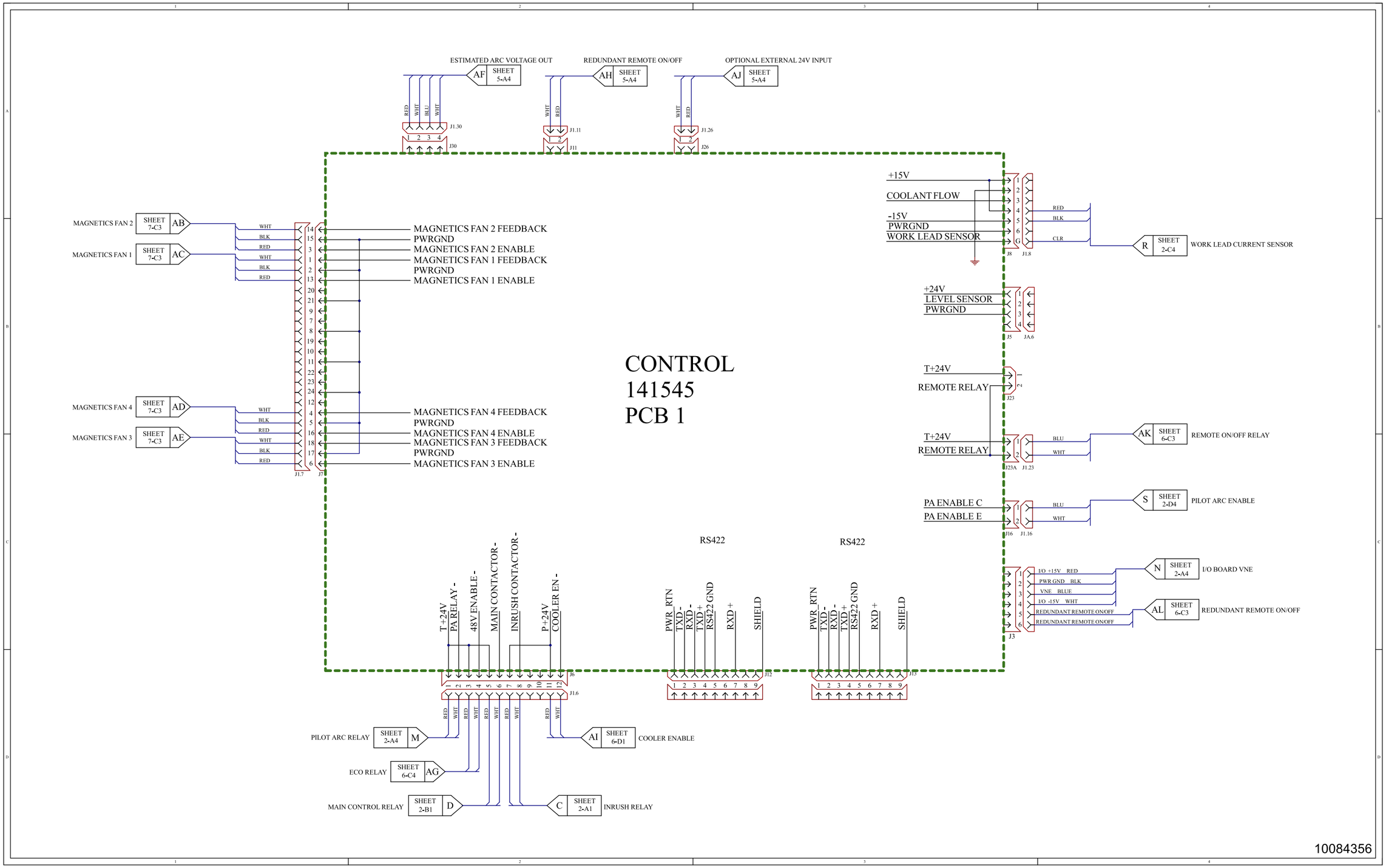
ESTIMATED ARC VOLTAGE OUT
AF SHEET 5-A4
REDUNDANT REMOTE ON/OFF
AH SHEET 5-A4
OPTIONAL EXTERNAL 24V INPUT
AJ SHEET 5-A4
MAGNETICS FAN 2
SHEET 7-C3 AB
MAGNETICS FAN 1
SHEET 7-C3 AC
MAGNETICS FAN 4
SHEET 7-C3 AD
MAGNETICS FAN 3
SHEET 7-C3 AE
MAGNETICS FAN 2 FEEDBACK
PWRGND
MAGNETICS FAN 2 ENABLE
MAGNETICS FAN 1 FEEDBACK
PWRGND
MAGNETICS FAN 1 ENABLE
MAGNETICS FAN 4 FEEDBACK
PWRGND
MAGNETICS FAN 4 ENABLE
MAGNETICS FAN 3 FEEDBACK
PWRGND
MAGNETICS FAN 3 ENABLE
CONTROL
141545
PCB 1
+15V
COOLANT FLOW
-15V
PWRGND
WORK LEAD SENSOR
WORK LEAD CURRENT SENSOR
SHEET 2-C4
+24V
LEVEL SENSOR
PWRGND
T+24V
REMOTE RELAY
REMOTE ON/OFF RELAY
AK SHEET 6-C3
PA ENABLE C
PA ENABLE E
PILOT ARC ENABLE
S SHEET 2-D4
I/O +15V RED
PWR GND BLK
VNE BLUE
I/O -15V WHT
REDUNDANT REMOTE ON/OFF
REDUNDANT REMOTE ON/OFF
I/O BOARD VNE
N SHEET 2-A4
REDUNDANT REMOTE ON/OFF
AL SHEET 6-C3
T+24V
PA RELAY -
48V ENABLE -
MAIN CONTACTOR -
INRUSH CONTACTOR -
P+24V
COOLER EN -
RS422
PWR_RTN
TXD -
RXD -
TXD +
RS422 GND
RXD +
SHIELD
RS422
PWR_RTN
TXD -
RXD -
TXD +
RS422 GND
RXD +
SHIELD
PILOT ARC RELAY
SHEET 2-A4 M
COOLER ENABLE
AI SHEET 6-D1
ECO RELAY
SHEET 6-C4 AG
MAIN CONTROL RELAY
SHEET 2-B1 D
C SHEET 2-A1
INRUSH RELAY
10084356

# Plasma power supply 4 (Sheet 5 of 25)

This page is blank.

This page is blank.

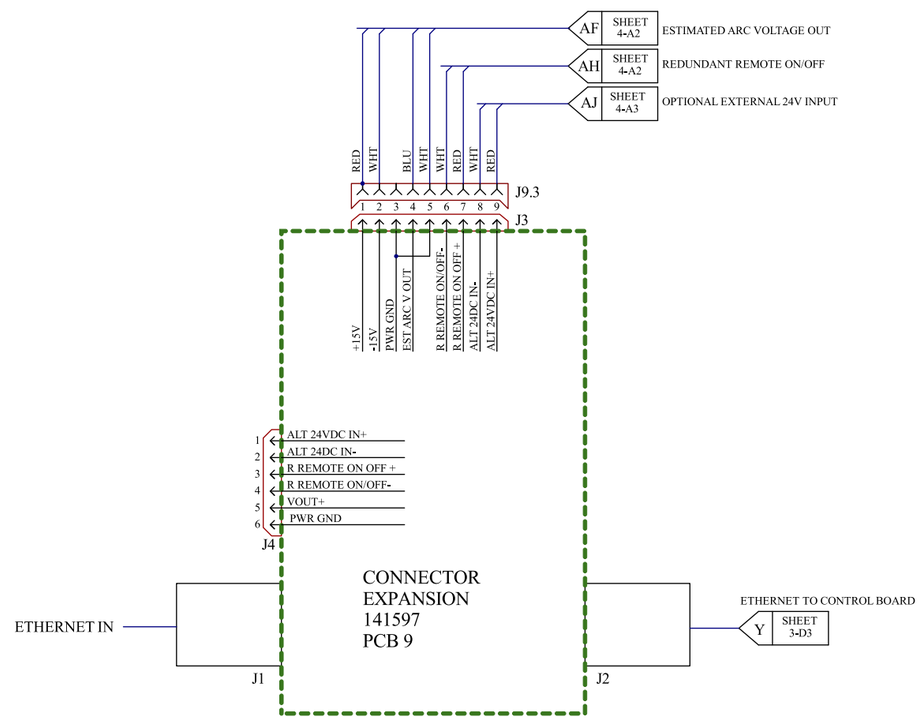
AF
SHEET 4-A2
ESTIMATED ARC VOLTAGE OUT
AH
SHEET 4-A2
REDUNDANT REMOTE ON/OFF
AJ
SHEET 4-A3
OPTIONAL EXTERNAL 24V INPUT
RED
WHT
BLU
WHT
WHT
RED
WHT
RED
J9.3
1 2 3 4 5 6 7 8 9
J3
+15V
-15V
PWR GND
EST ARC V OUT
R REMOTE ON/OFF-
R REMOTE ON OFF +
ALT 24DC IN-
ALT 24VDC IN+
1 ALT 24VDC IN+
2 ALT 24DC IN-
3 R REMOTE ON OFF +
4 R REMOTE ON/OFF-
5 VOUT+
6 PWR GND
J4
CONNECTOR
EXPANSION
141597
PCB 9
ETHERNET IN
J1
J2
ETHERNET TO CONTROL BOARD
Y
SHEET 3-D3

10084356

# Plasma power supply 5 (Sheet 6 of 25)

This page is blank.

This page is blank.

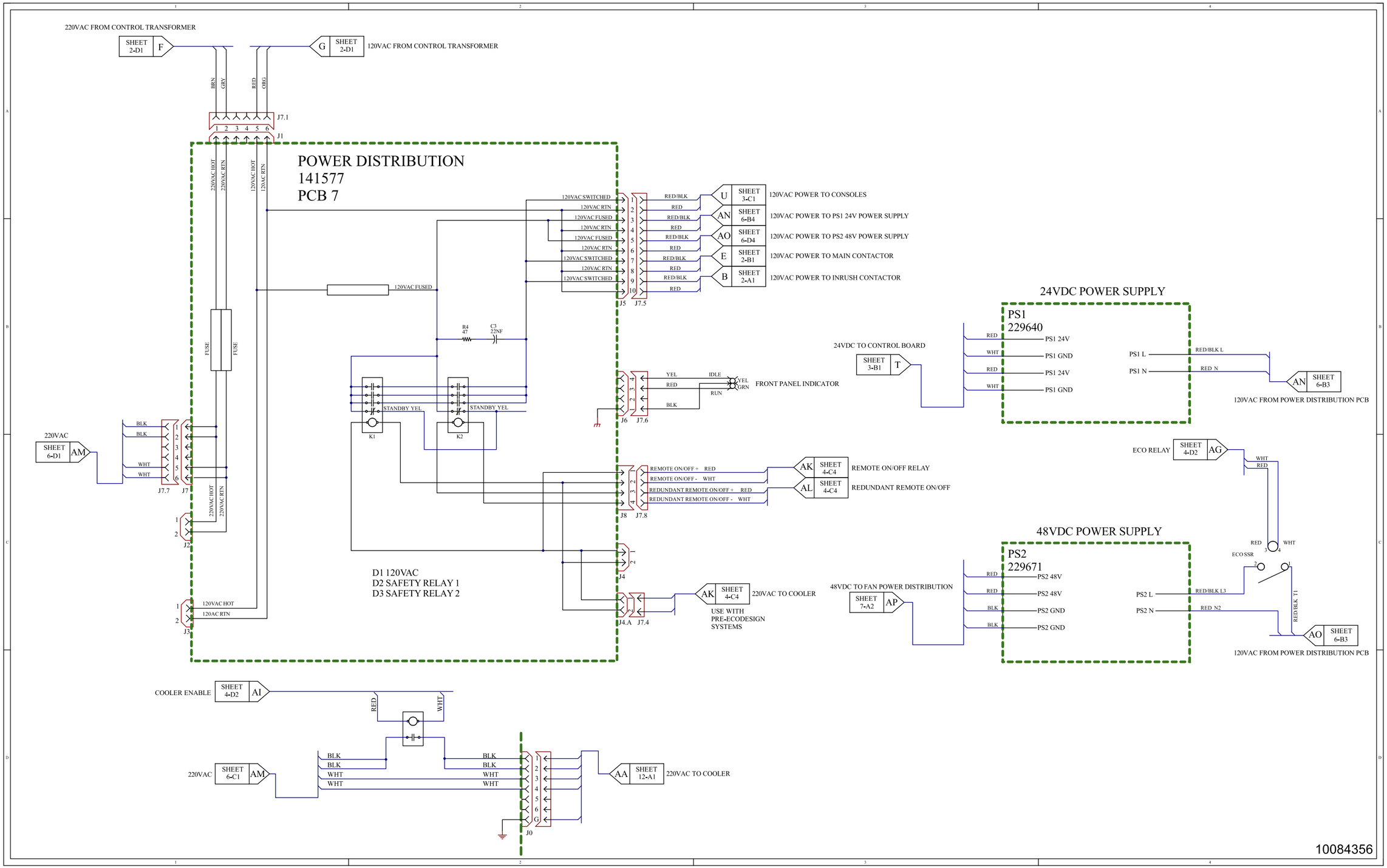
220VAC FROM CONTROL TRANSFORMER
SHEET 2-D1 F
G SHEET 2-D1 120VAC FROM CONTROL TRANSFORMER
BRN GRY RED ORG
J7.1
1 2 3 4 5 6
J1
POWER DISTRIBUTION
141577
PCB 7
220VAC HOT 220VAC RTN 120VAC HOT 120AC RTN
120VAC SWITCHED
120VAC RTN
120VAC FUSED
120VAC RTN
120VAC FUSED
120VAC RTN
120VAC SWITCHED
120VAC RTN
120VAC SWITCHED
RED/BLK
RED
RED/BLK
RED
RED/BLK
RED
RED/BLK
RED
RED/BLK
RED
J5 J7.5
U SHEET 3-C1 120VAC POWER TO CONSOLES
AN SHEET 6-B4 120VAC POWER TO PS1 24V POWER SUPPLY
AO SHEET 6-D4 120VAC POWER TO PS2 48V POWER SUPPLY
E SHEET 2-B1 120VAC POWER TO MAIN CONTACTOR
B SHEET 2-A1 120VAC POWER TO INRUSH CONTACTOR
120VAC FUSED
R4 47
C3 22NF
FUSE
FUSE
STANDBY YEL
STANDBY YEL
K1
K2
YEL IDLE
RED
RUN
BLK
J6 J7.6
YEL GRN
FRONT PANEL INDICATOR
24VDC POWER SUPPLY
PS1
229640
24VDC TO CONTROL BOARD
SHEET 3-B1 T
RED PS1 24V
WHT PS1 GND
RED PS1 24V
WHT PS1 GND
PS1 L RED/BLK L
PS1 N RED N
AN SHEET 6-B3
120VAC FROM POWER DISTRIBUTION PCB
220VAC
SHEET 6-D1 AM
BLK
BLK
WHT
WHT
J7.7 J7
220VAC HOT 220VAC RTN
J2
REMOTE ON/OFF + RED
REMOTE ON/OFF - WHT
REDUNDANT REMOTE ON/OFF + RED
REDUNDANT REMOTE ON/OFF - WHT
J8 J7.8
AK SHEET 4-C4 REMOTE ON/OFF RELAY
AL SHEET 4-C4 REDUNDANT REMOTE ON/OFF
ECO RELAY SHEET 4-D2 AG
WHT
RED
48VDC POWER SUPPLY
PS2
229671
RED PS2 48V
RED PS2 48V
BLK PS2 GND
BLK PS2 GND
PS2 L RED/BLK L3
PS2 N RED N2
RED WHT
ECO SSR
RED/BLK T1
AO SHEET 6-B3
120VAC FROM POWER DISTRIBUTION PCB
J4
D1 120VAC
D2 SAFETY RELAY 1
D3 SAFETY RELAY 2
120VAC HOT
120AC RTN
J3
J4.A J7.4
AK SHEET 4-C4 220VAC TO COOLER
USE WITH
PRE-ECODESIGN
SYSTEMS
48VDC TO FAN POWER DISTRIBUTION
SHEET 7-A2 AP
COOLER ENABLE SHEET 4-D2 AI
RED WHT
220VAC SHEET 6-C1 AM
BLK BLK WHT WHT
BLK BLK WHT WHT
J0
AA SHEET 12-A1 220VAC TO COOLER
10084356

# Plasma power supply 6 (Sheet 7 of 25)

This page is blank.

This page is blank.

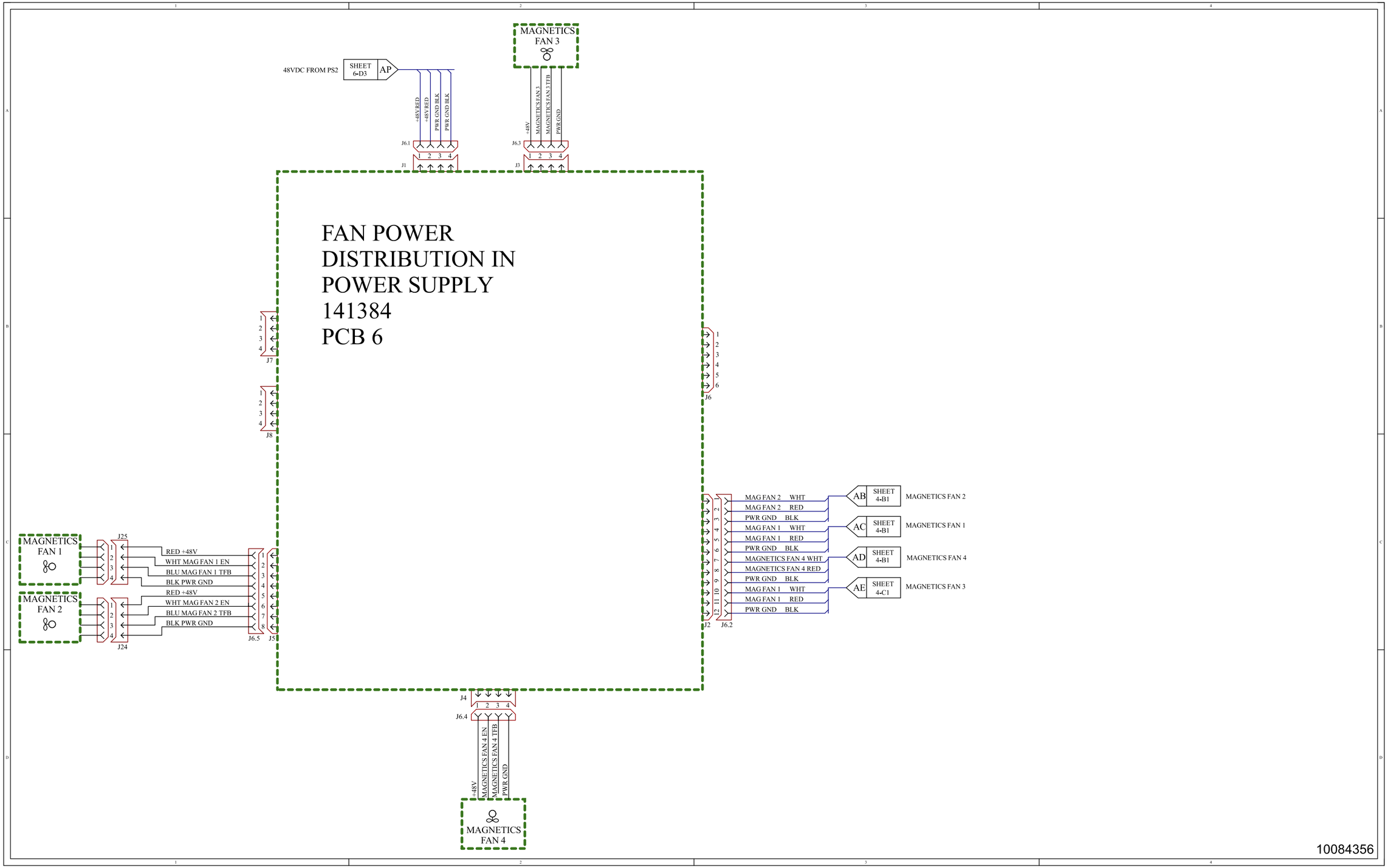
MAGNETICS FAN 3
48VDC FROM PS2
SHEET 6-D3
AP
+48V RED
+48V RED
PWR GND BLK
PWR GND BLK
J6.1
J1
+48V
MAGNETICS FAN 3
MAGNETICS FAN 3 TFB
PWR GND
J6.3
J3
FAN POWER DISTRIBUTION IN POWER SUPPLY 141384 PCB 6
J7
J8
J6
MAGNETICS FAN 1
MAGNETICS FAN 2
J25
J24
RED +48V
WHT MAG FAN 1 EN
BLU MAG FAN 1 TFB
BLK PWR GND
RED +48V
WHT MAG FAN 2 EN
BLU MAG FAN 2 TFB
BLK PWR GND
J6.5
J5
J2
J6.2
MAG FAN 2 WHT
MAG FAN 2 RED
PWR GND BLK
MAG FAN 1 WHT
MAG FAN 1 RED
PWR GND BLK
MAGNETICS FAN 4 WHT
MAGNETICS FAN 4 RED
PWR GND BLK
MAG FAN 1 WHT
MAG FAN 1 RED
PWR GND BLK
AB SHEET 4-B1 MAGNETICS FAN 2
AC SHEET 4-B1 MAGNETICS FAN 1
AD SHEET 4-B1 MAGNETICS FAN 4
AE SHEET 4-C1 MAGNETICS FAN 3
J4
J6.4
+48V
MAGNETICS FAN 4 EN
MAGNETICS FAN 4 TFB
PWR GND
MAGNETICS FAN 4
10084356

# Plasma power supply 7 (Sheet 8 of 25)

This page is blank.

This page is blank.

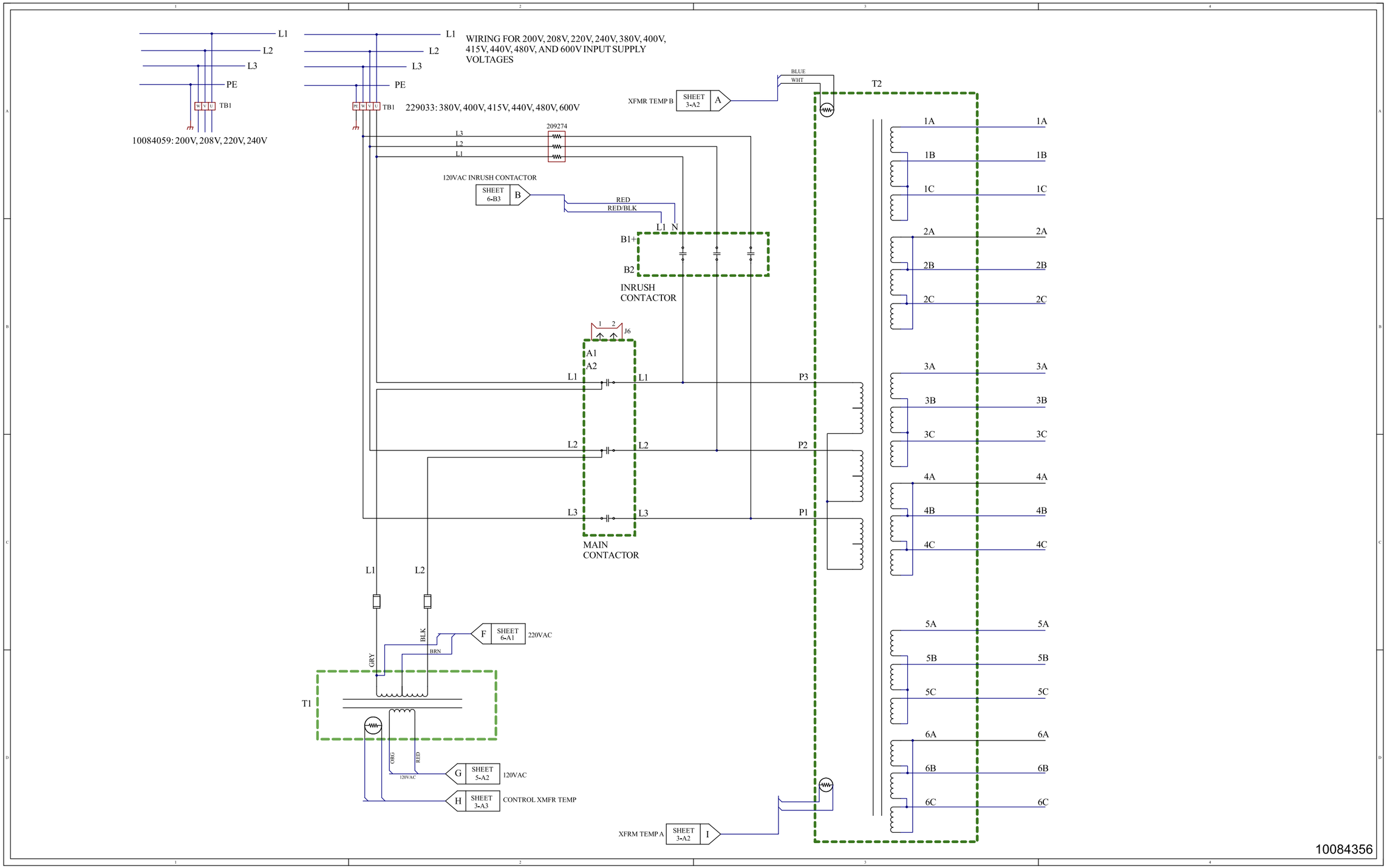
WIRING FOR 200V, 208V, 220V, 240V, 380V, 400V, 415V, 440V, 480V, AND 600V INPUT SUPPLY VOLTAGES
L1
L2
L3
PE
TB1
10084059: 200V, 208V, 220V, 240V
229033: 380V, 400V, 415V, 440V, 480V, 600V
209274
XFMR TEMP B
SHEET 3-A2
A
BLUE
WHT
T2
120VAC INRUSH CONTACTOR
SHEET 6-B3
B
RED
RED/BLK
L1 N
B1+
B2
INRUSH CONTACTOR
J6
A1
A2
P3
P2
P1
MAIN CONTACTOR
BLK
BRN
GRY
F
SHEET 6-A1
220VAC
T1
ORG
RED
120VAC
G
SHEET 5-A2
120VAC
H
SHEET 3-A3
CONTROL XMFR TEMP
XFRM TEMP A
SHEET 3-A2
I
1A
1B
1C
2A
2B
2C
3A
3B
3C
4A
4B
4C
5A
5B
5C
6A
6B
6C
10084356

# Gas connect console 1 (Sheet 9 of 25)

This page is blank.

This page is blank.

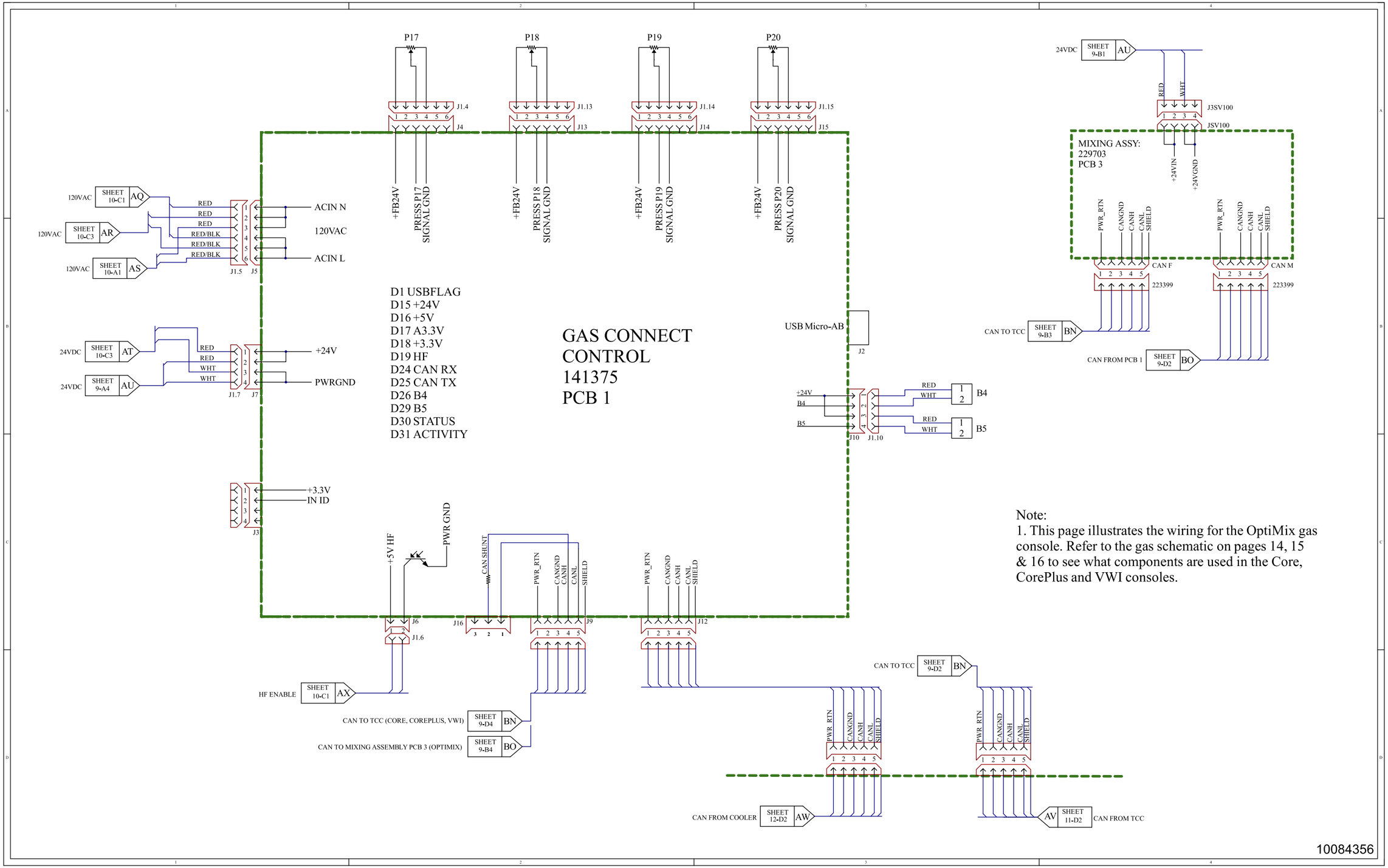


Note:
1. This page illustrates the wiring for the OptiMix gas console. Refer to the gas schematic on pages 14, 15 & 16 to see what components are used in the Core, CorePlus and VWI consoles.

# Gas connect console 2 (Sheet 10 of 25)

This page is blank.

This page is blank.

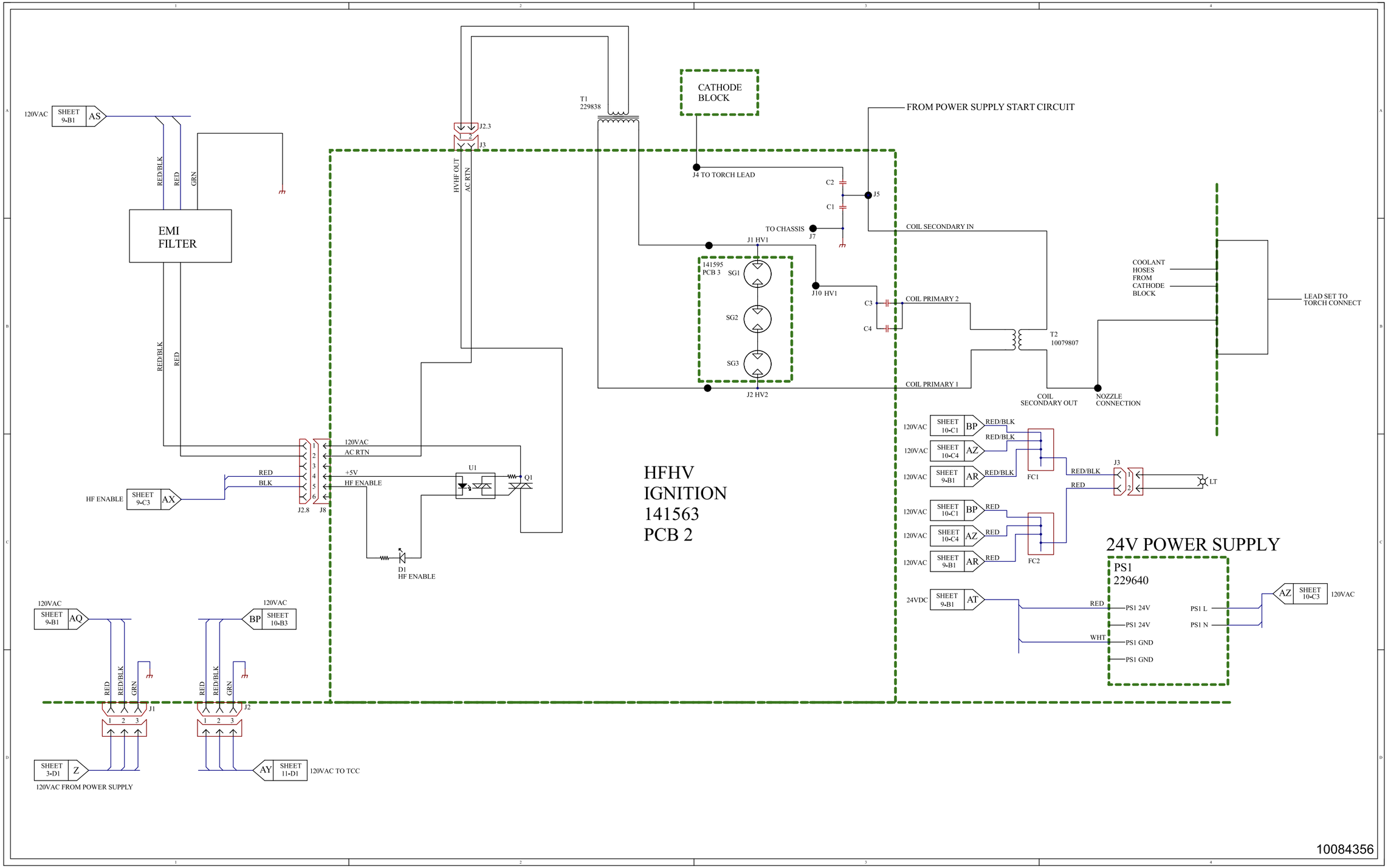
120VAC
SHEET 9-B1
AS
RED/BLK
RED
GRN
EMI FILTER
RED/BLK
RED
T1 229838
J2.3
J3
HVHF OUT
AC RTN
CATHODE BLOCK
FROM POWER SUPPLY START CIRCUIT
J4 TO TORCH LEAD
C2
C1
J5
TO CHASSIS
J7
J1 HV1
COIL SECONDARY IN
141595 PCB 3
SG1
SG2
SG3
J10 HV1
C3
C4
COIL PRIMARY 2
T2 10079807
COOLANT HOSES FROM CATHODE BLOCK
LEAD SET TO TORCH CONNECT
COIL PRIMARY 1
J2 HV2
COIL SECONDARY OUT
NOZZLE CONNECTION
120VAC
AC RTN
+5V
HF ENABLE
U1
Q1
RED
BLK
HF ENABLE
SHEET 9-C3
AX
J2.8
J8
D1 HF ENABLE
HFHV IGNITION 141563 PCB 2
120VAC
SHEET 10-C1
BP
RED/BLK
120VAC
SHEET 10-C4
AZ
RED/BLK
120VAC
SHEET 9-B1
AR
RED/BLK
FC1
RED/BLK
RED
J3
LT
120VAC
SHEET 10-C1
BP
RED
120VAC
SHEET 10-C4
AZ
RED
120VAC
SHEET 9-B1
AR
RED
FC2
24V POWER SUPPLY
PS1 229640
24VDC
SHEET 9-B1
AT
RED
WHT
PS1 24V
PS1 24V
PS1 GND
PS1 GND
PS1 L
PS1 N
AZ
SHEET 10-C3
120VAC
120VAC
SHEET 9-B1
AQ
RED
RED/BLK
GRN
J1
120VAC
BP
SHEET 10-B3
RED
RED/BLK
GRN
J2
SHEET 3-D1
Z
120VAC FROM POWER SUPPLY
AY
SHEET 11-D1
120VAC TO TCC
10084356

# TorchConnect console (Sheet 11 of 25)

This page is blank.

This page is blank.

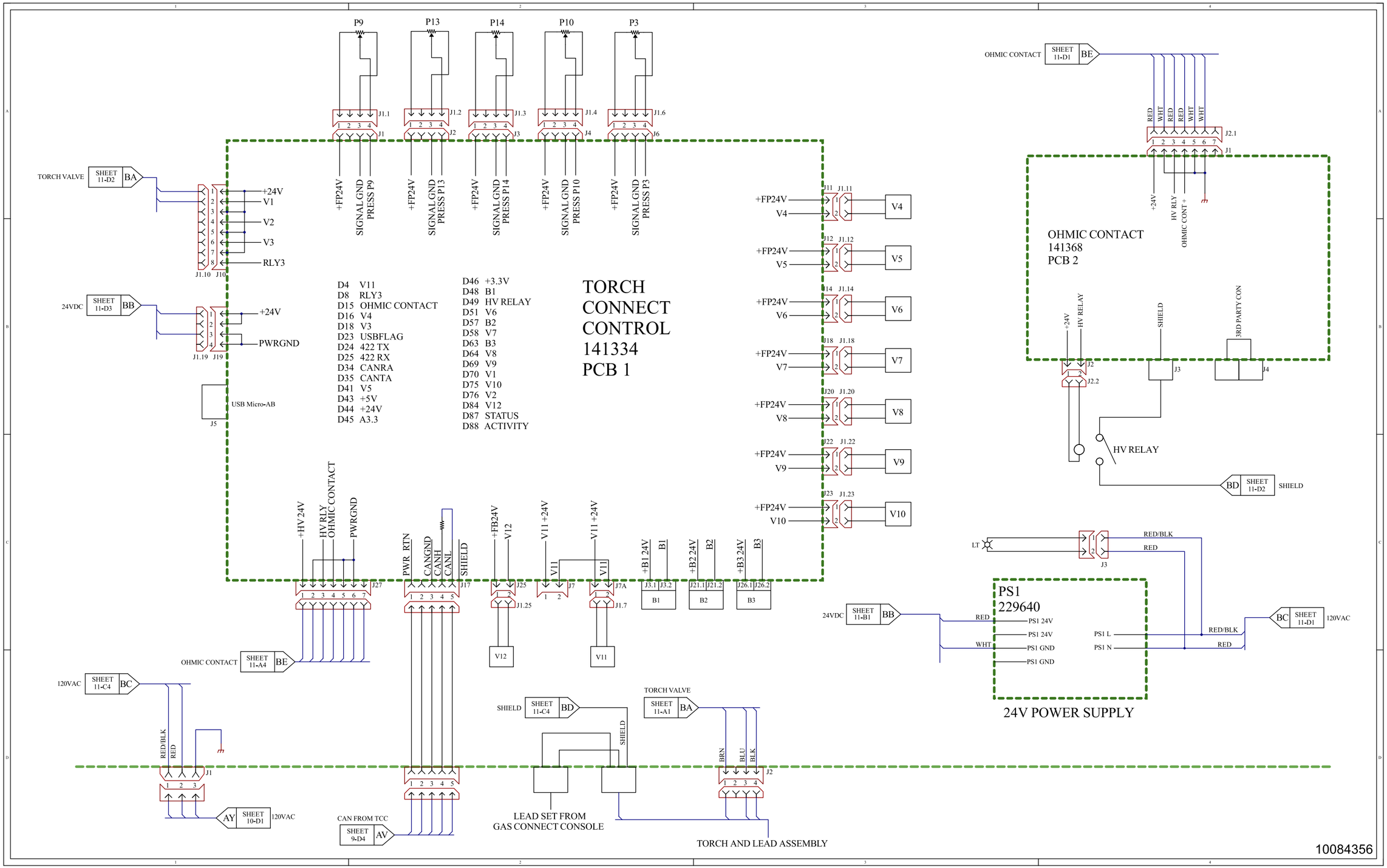
TORCH CONNECT CONTROL
141334
PCB 1
D4 V11
D8 RLY3
D15 OHMIC CONTACT
D16 V4
D18 V3
D23 USBFLAG
D24 422 TX
D25 422 RX
D34 CANRA
D35 CANTA
D41 V5
D43 +5V
D44 +24V
D45 A3.3
D46 +3.3V
D48 B1
D49 HV RELAY
D51 V6
D57 B2
D58 V7
D63 B3
D64 V8
D69 V9
D70 V1
D75 V10
D76 V2
D84 V12
D87 STATUS
D88 ACTIVITY
OHMIC CONTACT
141368
PCB 2
PS1
229640
24V POWER SUPPLY
HV RELAY
LEAD SET FROM
GAS CONNECT CONSOLE
TORCH AND LEAD ASSEMBLY
10084356

# Cooler (Sheet 12 of 25)

This page is blank.

This page is blank.

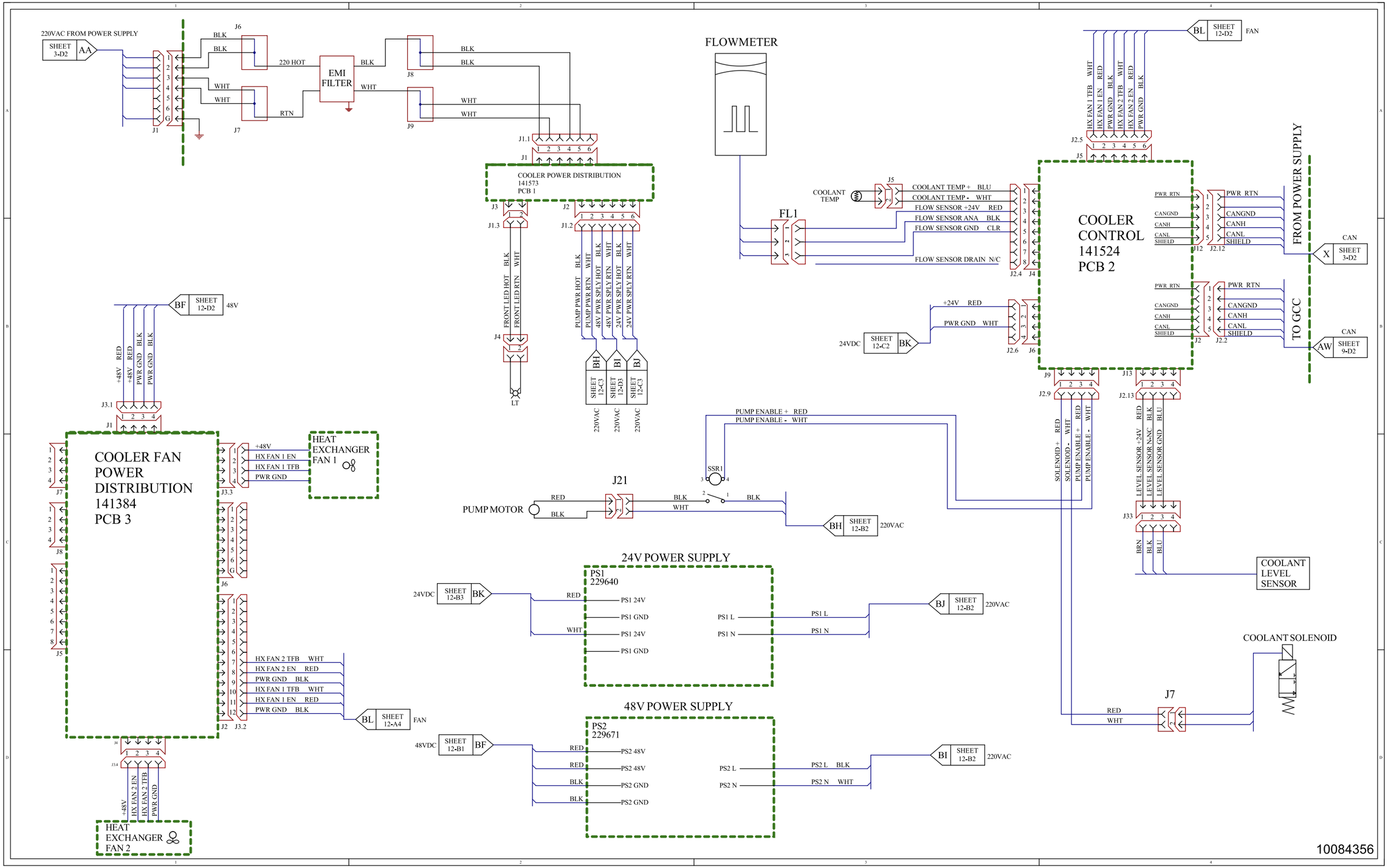
220VAC FROM POWER SUPPLY
SHEET 3-D2
AA
J1
J6
J7
BLK
BLK
WHT
WHT
220 HOT
RTN
EMI FILTER
BLK
WHT
J8
J9
BLK
BLK
WHT
WHT
J1.1
J1
COOLER POWER DISTRIBUTION
141573
PCB 1
J3
J2
J1.3
J1.2
FRONT LED HOT BLK
FRONT LED RTN WHT
PUMP PWR HOT BLK
PUMP PWR RTN WHT
48V PWR SPLY HOT BLK
48V PWR SPLY RTN WHT
24V PWR SPLY HOT BLK
24V PWR SPLY RTN WHT
J4
LT
BH
BI
BJ
SHEET 12-C3
SHEET 12-D3
SHEET 12-C3
220VAC
220VAC
220VAC
BF
SHEET 12-D2
48V
+48V RED
+48V RED
PWR GND BLK
PWR GND BLK
J3.1
J1
COOLER FAN POWER DISTRIBUTION
141384
PCB 3
J7
J8
J5
J6
J2
J3.2
J3.3
+48V
HX FAN 1 EN
HX FAN 1 TFB
PWR GND
HEAT EXCHANGER FAN 1
HX FAN 2 TFB WHT
HX FAN 2 EN RED
PWR GND BLK
HX FAN 1 TFB WHT
HX FAN 1 EN RED
PWR GND BLK
BL
SHEET 12-A4
FAN
J4
J34
+48V
HX FAN 2 EN
HX FAN 2 TFB
PWR GND
HEAT EXCHANGER FAN 2
FLOWMETER
FL1
COOLANT TEMP
J5
COOLANT TEMP + BLU
COOLANT TEMP - WHT
FLOW SENSOR +24V RED
FLOW SENSOR ANA BLK
FLOW SENSOR GND CLR
FLOW SENSOR DRAIN N/C
J2.4
J4
+24V RED
PWR GND WHT
24VDC
SHEET 12-C2
BK
J2.6
J6
PUMP ENABLE + RED
PUMP ENABLE - WHT
SSR1
J21
PUMP MOTOR
RED
BLK
BLK
WHT
BLK
BH
SHEET 12-B2
220VAC
24V POWER SUPPLY
PS1
229640
24VDC
SHEET 12-B3
BK
RED
WHT
PS1 24V
PS1 GND
PS1 24V
PS1 GND
PS1 L
PS1 N
PS1 L
PS1 N
BJ
SHEET 12-B2
220VAC
48V POWER SUPPLY
PS2
229671
48VDC
SHEET 12-B1
BF
RED
RED
BLK
BLK
PS2 48V
PS2 48V
PS2 GND
PS2 GND
PS2 L
PS2 N
PS2 L BLK
PS2 N WHT
BI
SHEET 12-B2
220VAC
BL
SHEET 12-D2
FAN
HX FAN 1 TFB WHT
HX FAN 1 EN RED
PWR GND BLK
HX FAN 2 TFB WHT
HX FAN 2 EN RED
PWR GND BLK
J2.5
J5
COOLER CONTROL
141524
PCB 2
PWR RTN
CANGND
CANH
CANL
SHIELD
J12
J2.12
PWR RTN
CANGND
CANH
CANL
SHIELD
J2
J2.2
FROM POWER SUPPLY
TO GCC
CAN
X
SHEET 3-D2
CAN
AW
SHEET 9-D2
J9
J2.9
J13
J2.13
SOLENOID + RED
SOLENOID - WHT
PUMP ENABLE + RED
PUMP ENABLE - WHT
LEVEL SENSOR +24V RED
LEVEL SENSOR NNC BLK
LEVEL SENSOR GND BLU
J33
BRN
BLK
BLU
COOLANT LEVEL SENSOR
COOLANT SOLENOID
J7
RED
WHT
10084356

# Coolant system 1 (Sheet 13 of 25)

This page is blank.

This page is blank.

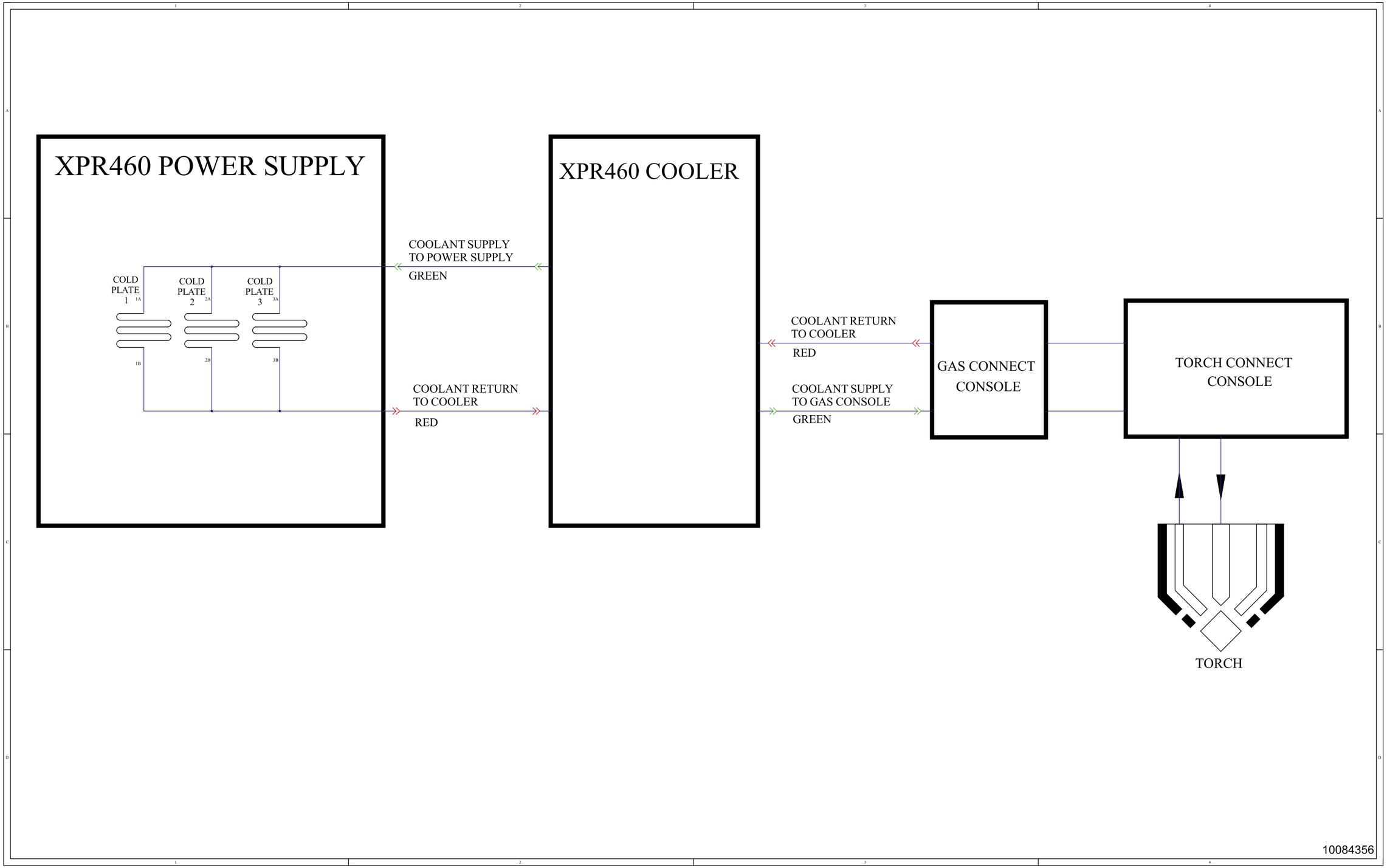
XPR460 POWER SUPPLY
COLD PLATE 1
1A
1B
COLD PLATE 2
2A
2B
COLD PLATE 3
3A
3B
COOLANT SUPPLY TO POWER SUPPLY
GREEN
COOLANT RETURN TO COOLER
RED
XPR460 COOLER
COOLANT RETURN TO COOLER
RED
COOLANT SUPPLY TO GAS CONSOLE
GREEN
GAS CONNECT CONSOLE
TORCH CONNECT CONSOLE
TORCH
10084356

# Coolant system 2 (Sheet 14 of 25)

This page is blank.

This page is blank.

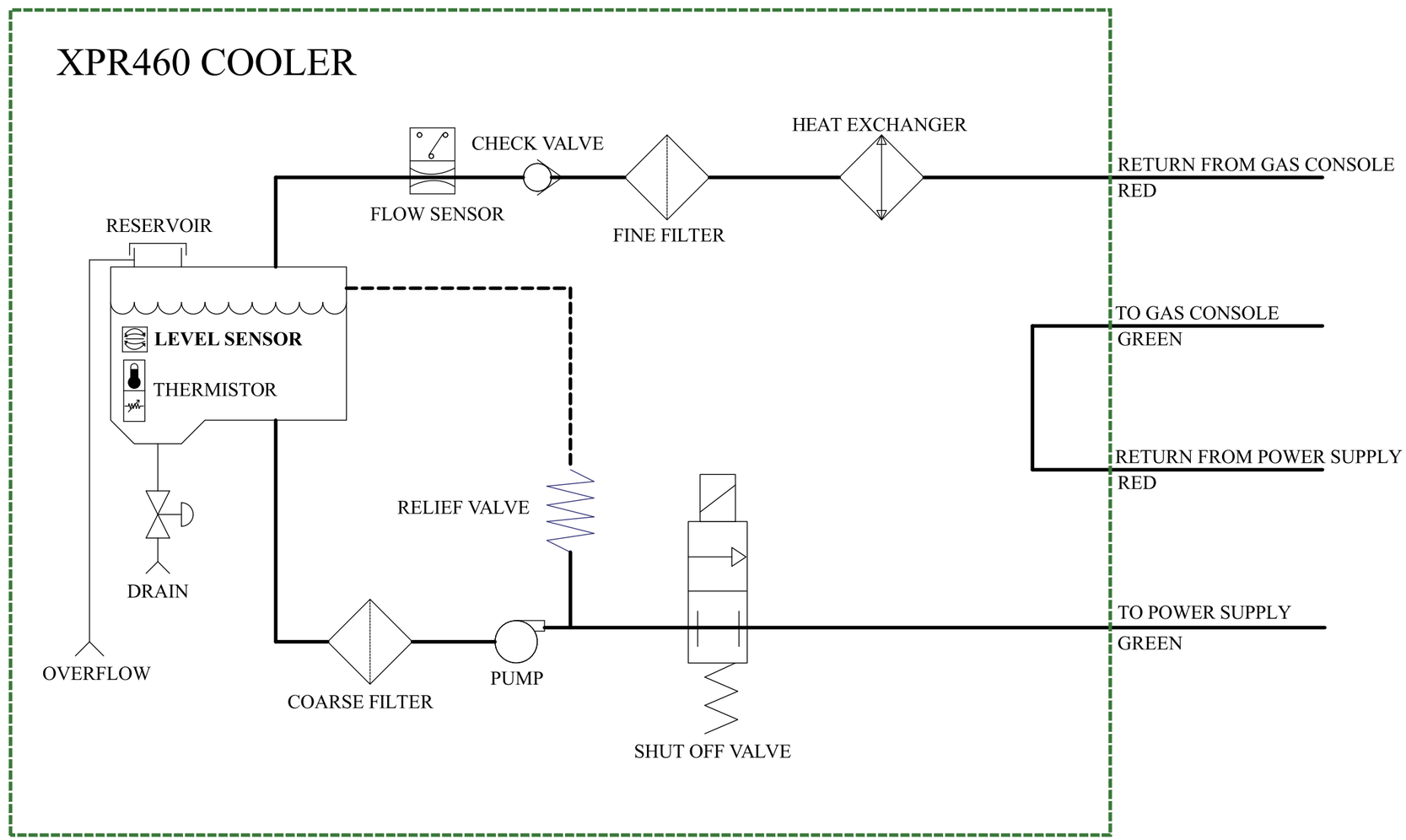
XPR460 COOLER
CHECK VALVE
HEAT EXCHANGER
RETURN FROM GAS CONSOLE
RED
FLOW SENSOR
FINE FILTER
RESERVOIR
LEVEL SENSOR
THERMISTOR
TO GAS CONSOLE
GREEN
RETURN FROM POWER SUPPLY
RED
RELIEF VALVE
DRAIN
TO POWER SUPPLY
GREEN
OVERFLOW
PUMP
COARSE FILTER
SHUT OFF VALVE

10084356

# Gas system 1 Core (Sheet 15 of 25)

This page is blank.

This page is blank.

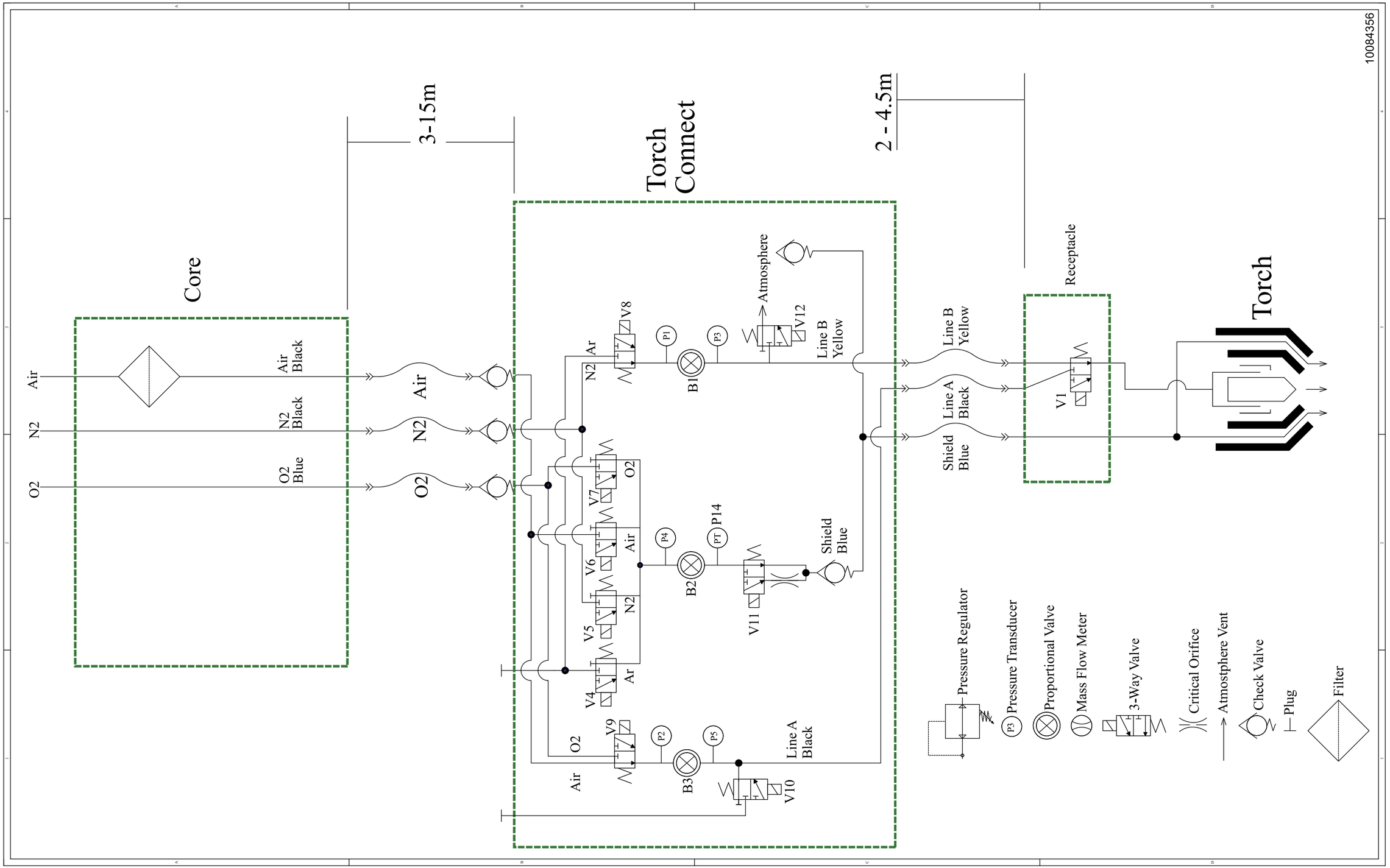
10084356
Core
Air
N2
O2
Air Black
N2 Black
O2 Blue
3-15m
Air
N2
O2
Torch Connect
V8
Ar
N2
P1
B1
P3
Atmosphere
V12
Line B Yellow
V7
O2
V6
Air
P4
B2
PT
P14
V11
Shield Blue
V5
N2
V4
Ar
V9
O2
Air
P2
B3
P5
V10
Line A Black
2 - 4.5m
Line B Yellow
Line A Black
Shield Blue
Receptacle
V1
Torch
Pressure Regulator
Pressure Transducer
Proportional Valve
Mass Flow Meter
3-Way Valve
Critical Orifice
Atmostphere Vent
Check Valve
Plug
Filter

# Gas system 2 CorePlus (Sheet 16 of 25)

This page is blank.

This page is blank.

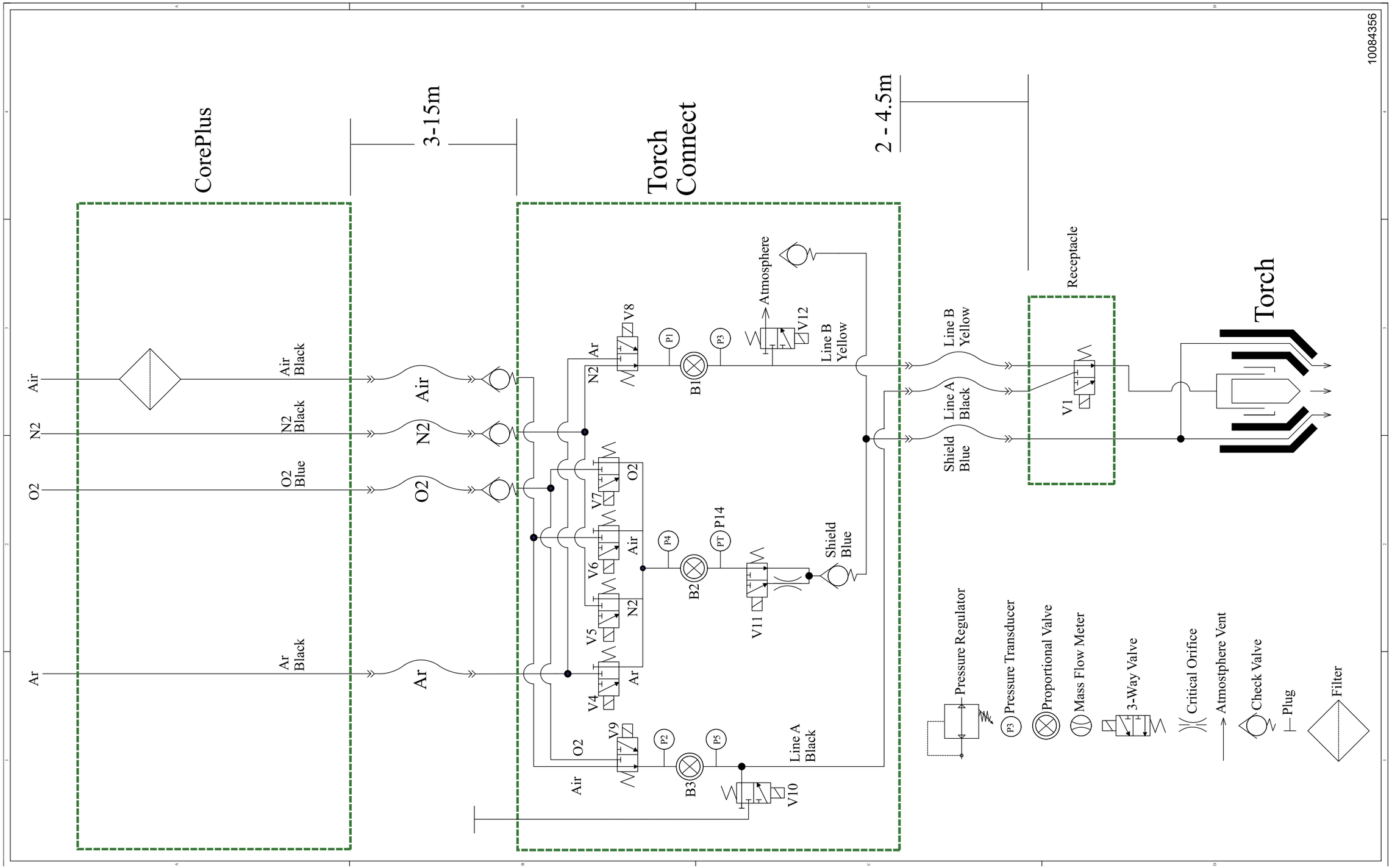
10084356
CorePlus
3-15m
Torch Connect
2 - 4.5m
Receptacle
Torch
Air
N2
O2
Ar
Air Black
N2 Black
O2 Blue
Ar Black
V1
V4
V5
V6
V7
V8
V9
V10
V11
V12
B1
B2
B3
P1
P2
P3
P4
P5
PT
P14
Atmosphere
Line B Yellow
Line A Black
Shield Blue
Pressure Regulator
Pressure Transducer
Proportional Valve
Mass Flow Meter
3-Way Valve
Critical Orifice
Atmostphere Vent
Check Valve
Plug
Filter

# Gas system 3 VWI (Sheet 17 of 25)

This page is blank.

This page is blank.

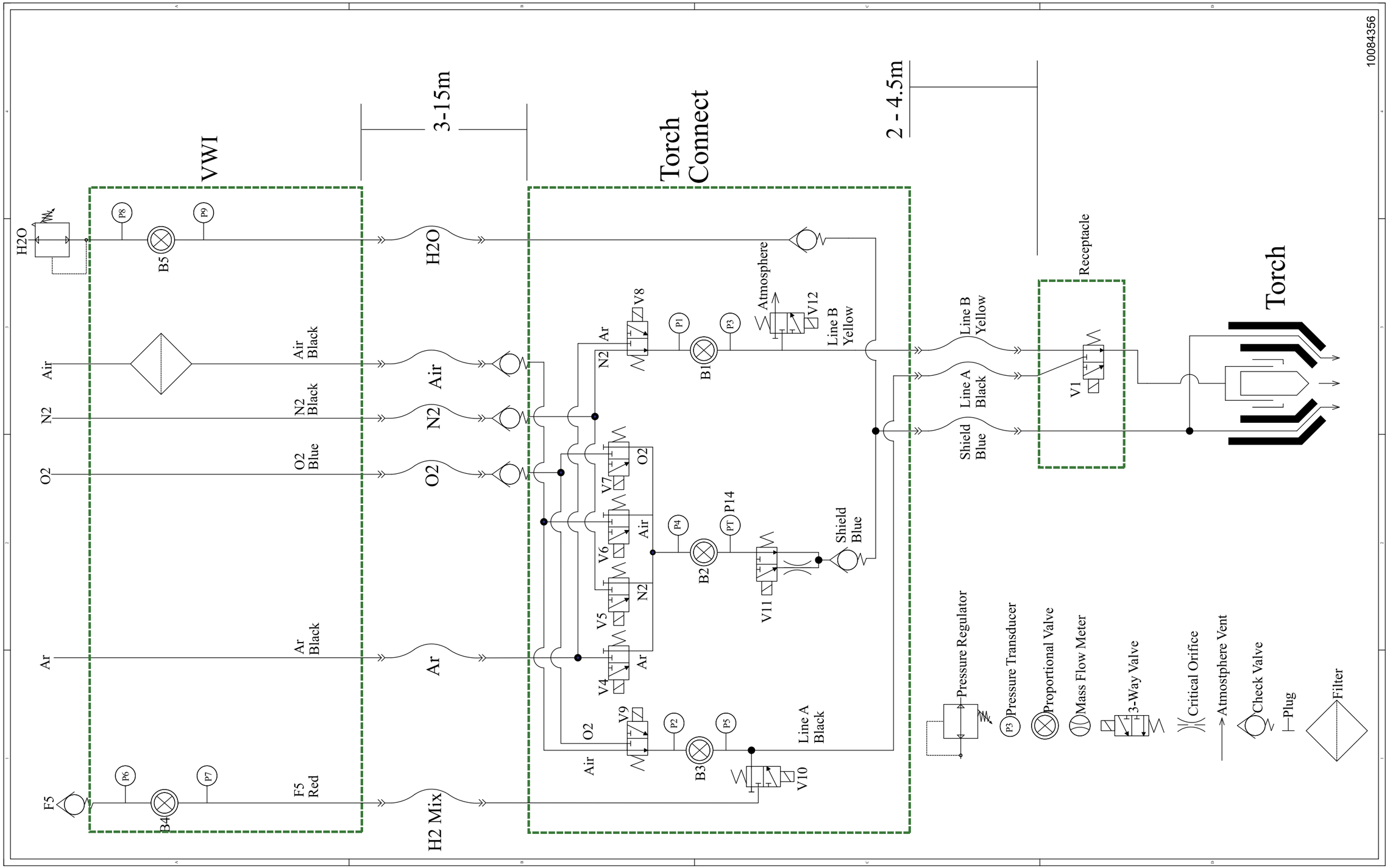
10084356
VWI
3-15m
Torch Connect
2 - 4.5m
Receptacle
Torch
H2O
B5
P8
P9
Air
N2
O2
Ar
F5
B4
P6
P7
Air Black
N2 Black
O2 Blue
Ar Black
F5 Red
H2O
Air
N2
O2
Ar
H2 Mix
V8
V12
V7
V6
V5
V4
V9
V11
V10
B1
B2
B3
P1
P2
P3
P4
P5
P14
PT
Atmosphere
Line B Yellow
Line A Black
Shield Blue
V1
Pressure Regulator
Pressure Transducer
Proportional Valve
Mass Flow Meter
3-Way Valve
Critical Orifice
Atmostphere Vent
Check Valve
Plug
Filter

# Gas system 4 OptiMix (Sheet 18 of 25)

This page is blank.

This page is blank.

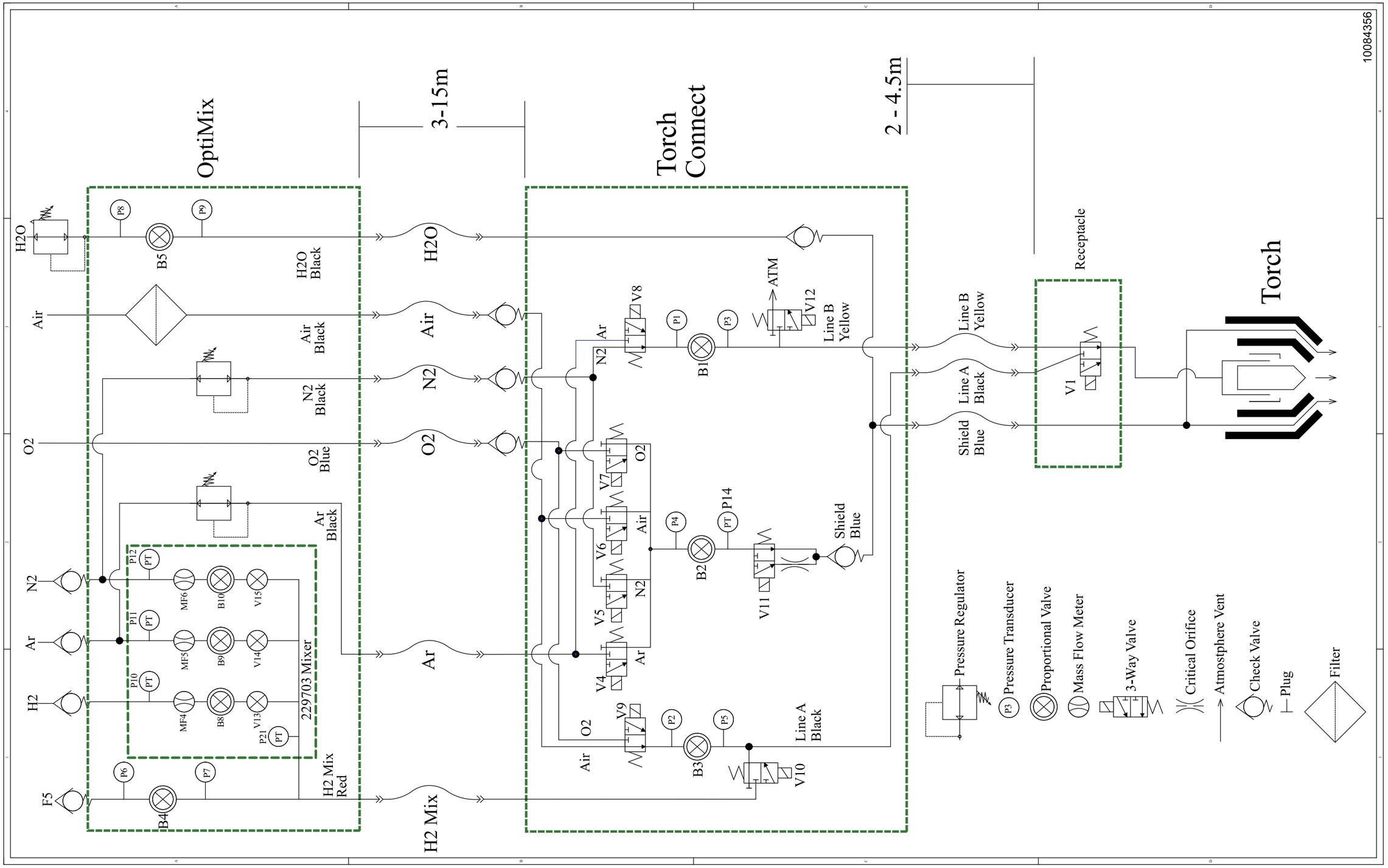
10084356
OptiMix
3-15m
Torch Connect
2 - 4.5m
Receptacle
Torch
H2O
Air
N2
O2
Ar
H2
F5
P8
P9
B5
H2O Black
Air Black
N2 Black
O2 Blue
Ar Black
P12
P11
P10
P21
PT
MF6
MF5
MF4
B10
B9
B8
V15
V14
V13
229703 Mixer
P6
P7
B4
H2 Mix Red
H2O
Air
N2
O2
Ar
H2 Mix
Ar
N2
V8
P1
B1
P3
ATM
V12
Line B Yellow
V7
V6
V5
V4
P4
B2
PT
P14
V11
Shield Blue
V9
P2
B3
P5
V10
Line A Black
Line B Yellow
Line A Black
Shield Blue
V1
Pressure Regulator
Pressure Transducer
Proportional Valve
Mass Flow Meter
3-Way Valve
Critical Orifice
Atmostphere Vent
Check Valve
Plug
Filter

# EtherCAT multi-drop (multi-system) interface (Sheet 19 of 25)

This page is blank.

This page is blank.

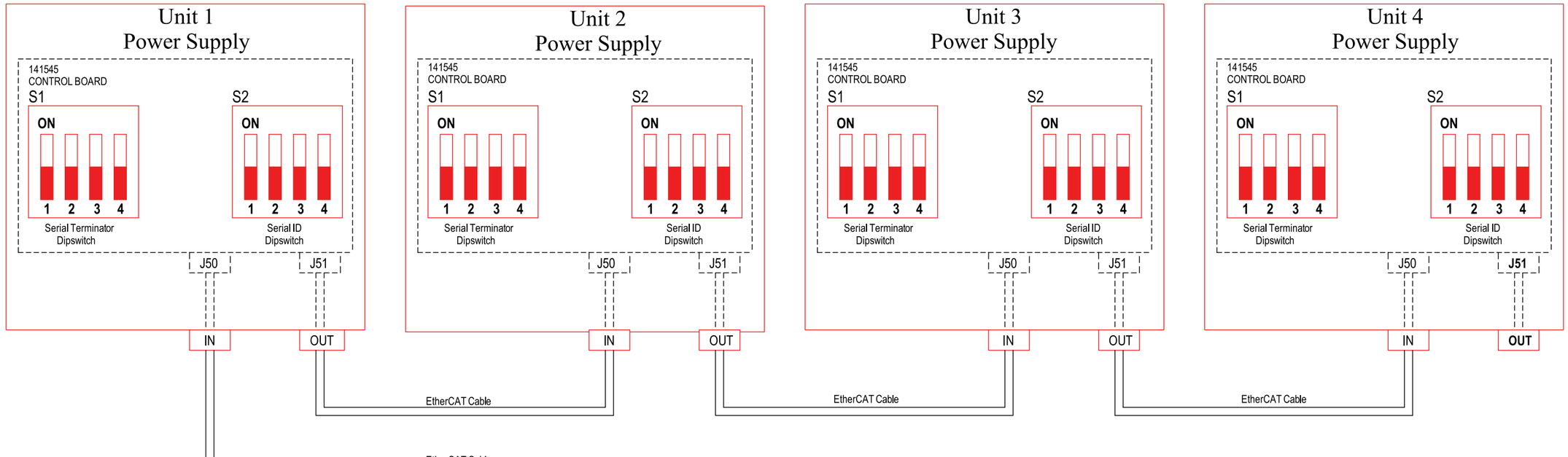


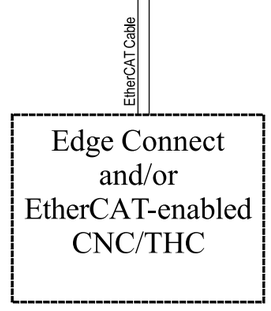


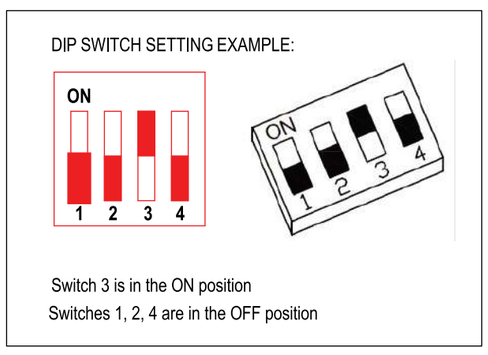


Notes:
1) Serial Terminators (S1) and Serial IDs (S2) are not used for EtherCAT connections to Edge Conect installations.
2) Serial Terminators (S1) and Serial IDs (S2) are not used for EtherCAT connections to EtherCAT-enabled CNC and/or THC installations.

10084356

# Serial RS-422 and discrete multi-drop (multi-system) interface (Sheet 20 of 25)

This page is blank.

This page is blank.

# Serial RS-422 and Discrete Multi-System Interface

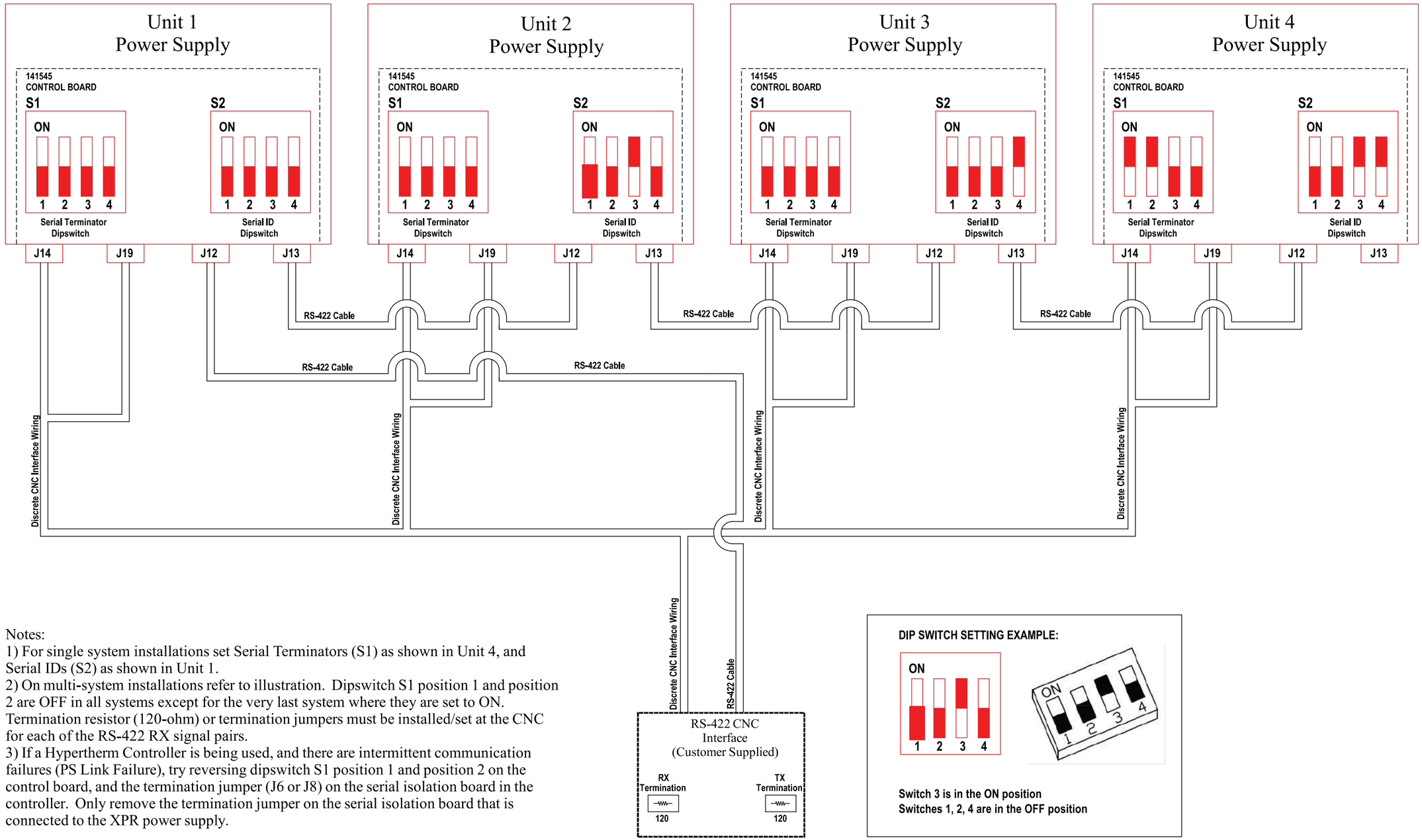


Notes:
1) For single system installations set Serial Terminators (S1) as shown in Unit 4, and Serial IDs (S2) as shown in Unit 1.
2) On multi-system installations refer to illustration. Dipswitch S1 position 1 and position 2 are OFF in all systems except for the very last system where they are set to ON. Termination resistor (120-ohm) or termination jumpers must be installed/set at the CNC for each of the RS-422 RX signal pairs.
3) If a Hypertherm Controller is being used, and there are intermittent communication failures (PS Link Failure), try reversing dipswitch S1 position 1 and position 2 on the control board, and the termination jumper (J6 or J8) on the serial isolation board in the controller. Only remove the termination jumper on the serial isolation board that is connected to the XPR power supply.

# Discrete multi-drop (multi-system) interface (Sheet 21 of 25)

This page is blank.

This page is blank.

# Discrete Multi-System Interface

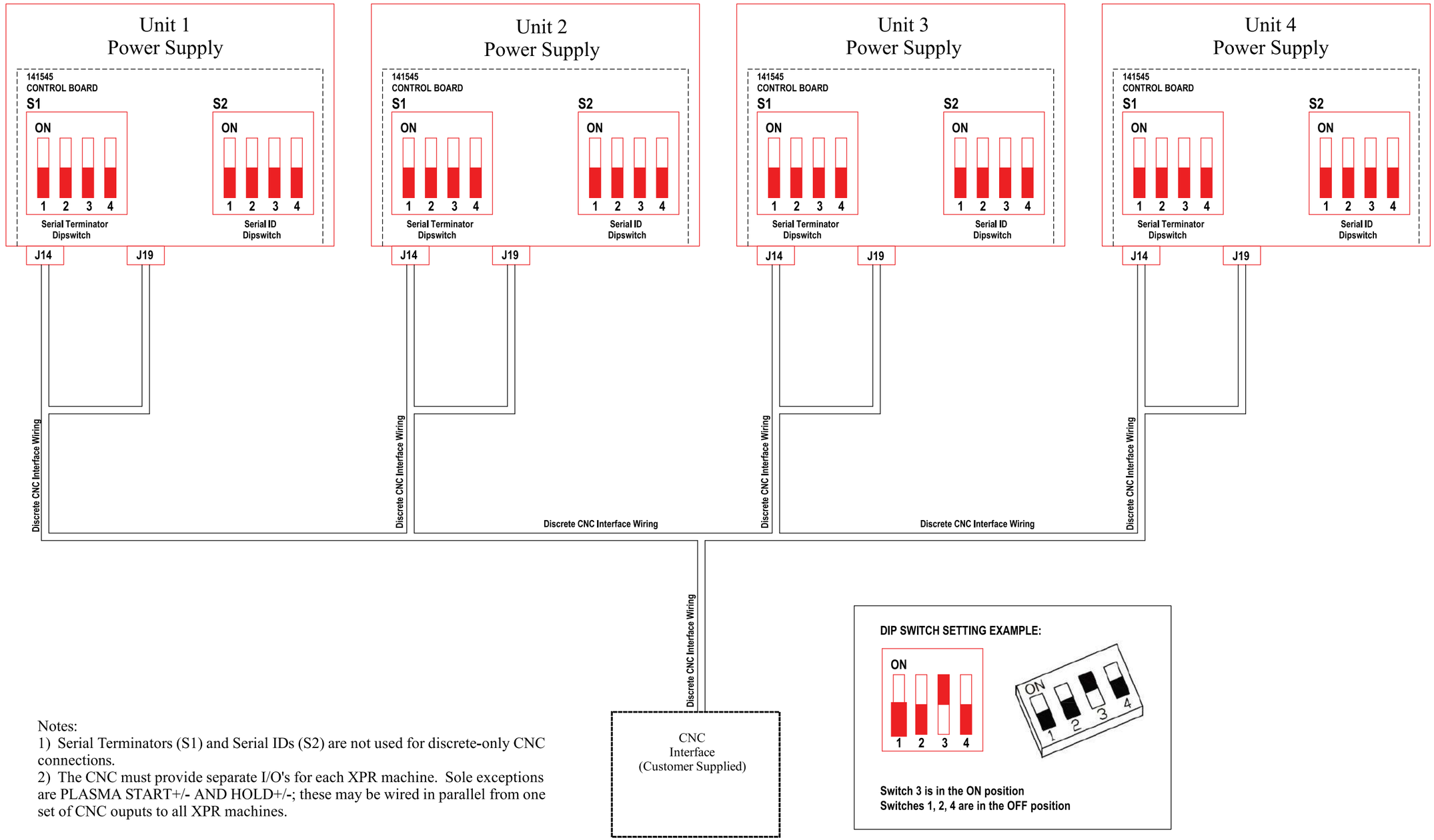


Notes:
1) Serial Terminators (S1) and Serial IDs (S2) are not used for discrete-only CNC connections.
2) The CNC must provide separate I/O's for each XPR machine. Sole exceptions are PLASMA START+/- AND HOLD+/-; these may be wired in parallel from one set of CNC ouputs to all XPR machines.

# EtherCAT connection to EDGE Connect (Sheet 22 of 25)

This page is blank.

This page is blank.

# EtherCAT Connection to Edge Connect

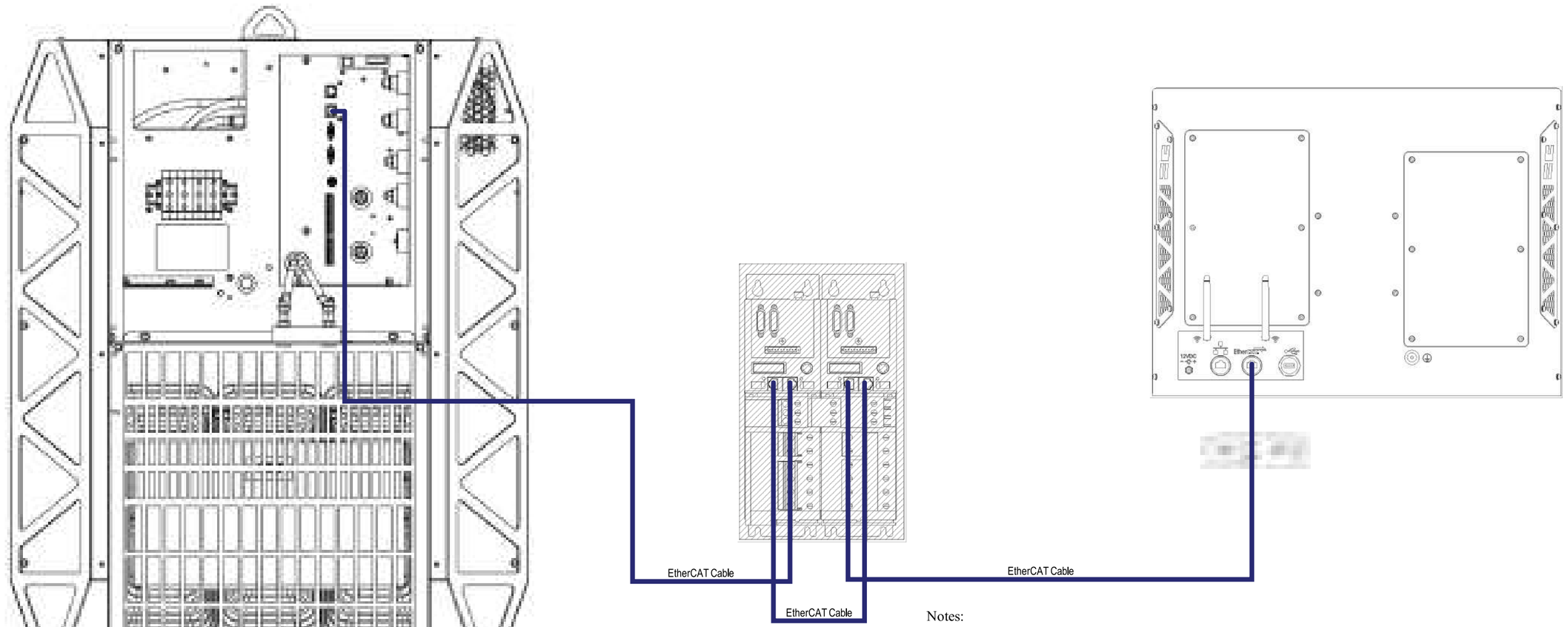


Notes:

1) Hypertherm EDGE Connect CNC examples shown with EtherCAT drives. Please see CNC documentation for installation and connection details.
2) Torch Height Controller not shown. Please see THC documentation for voltage divider installation and connection details.

10084356

# Discrete and serial RS-422 CNC connections (Sheet 23 of 25)

This page is blank.

This page is blank.

# Discrete CNC I/O and RS-422 Serial Connections

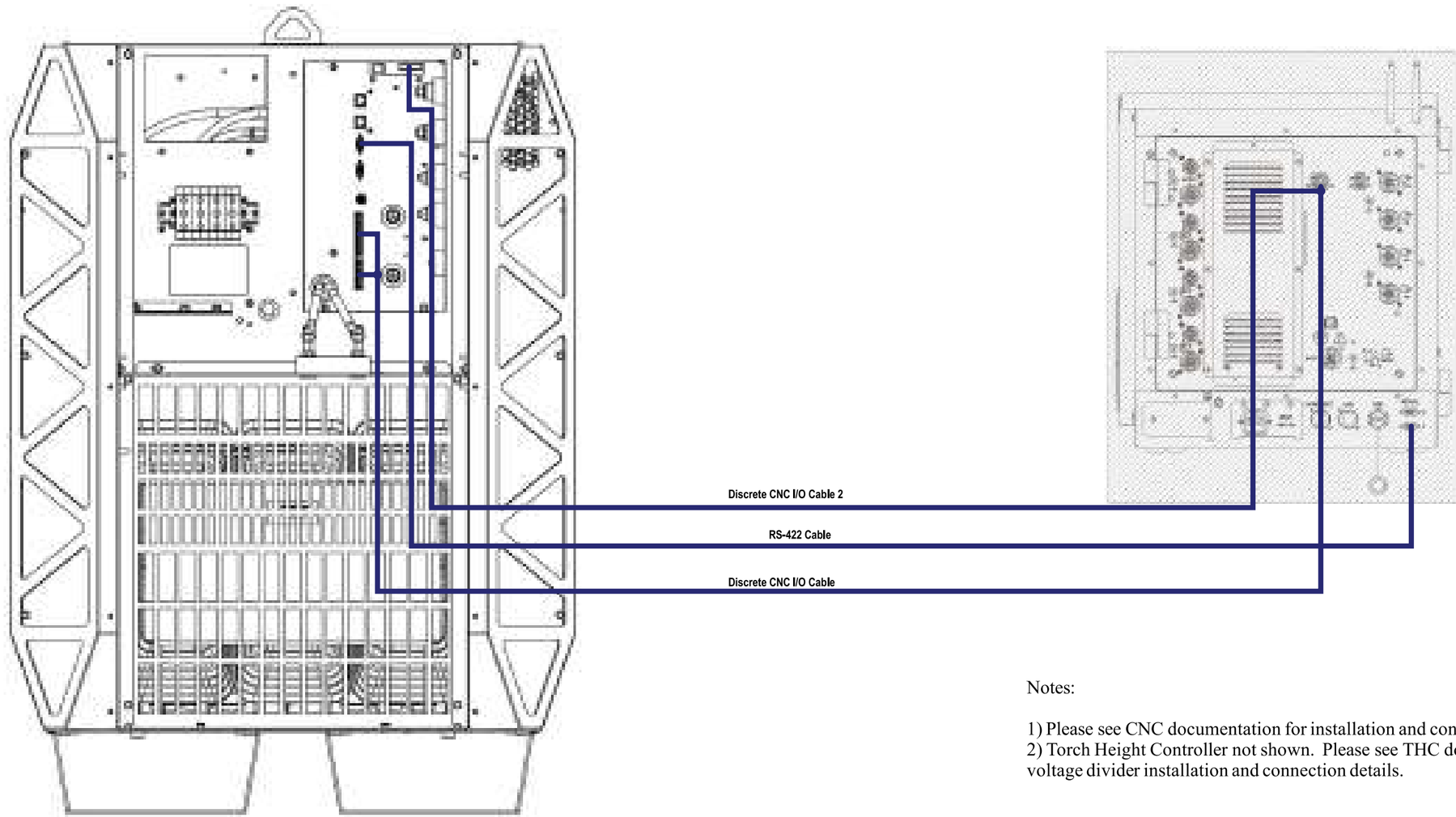


Notes:

1) Please see CNC documentation for installation and connection details.
2) Torch Height Controller not shown. Please see THC documentation for voltage divider installation and connection details.

10084356

# Discrete CNC connections (Sheet 24 of 25)

This page is blank.

This page is blank.

# Discrete CNC I/O Connections

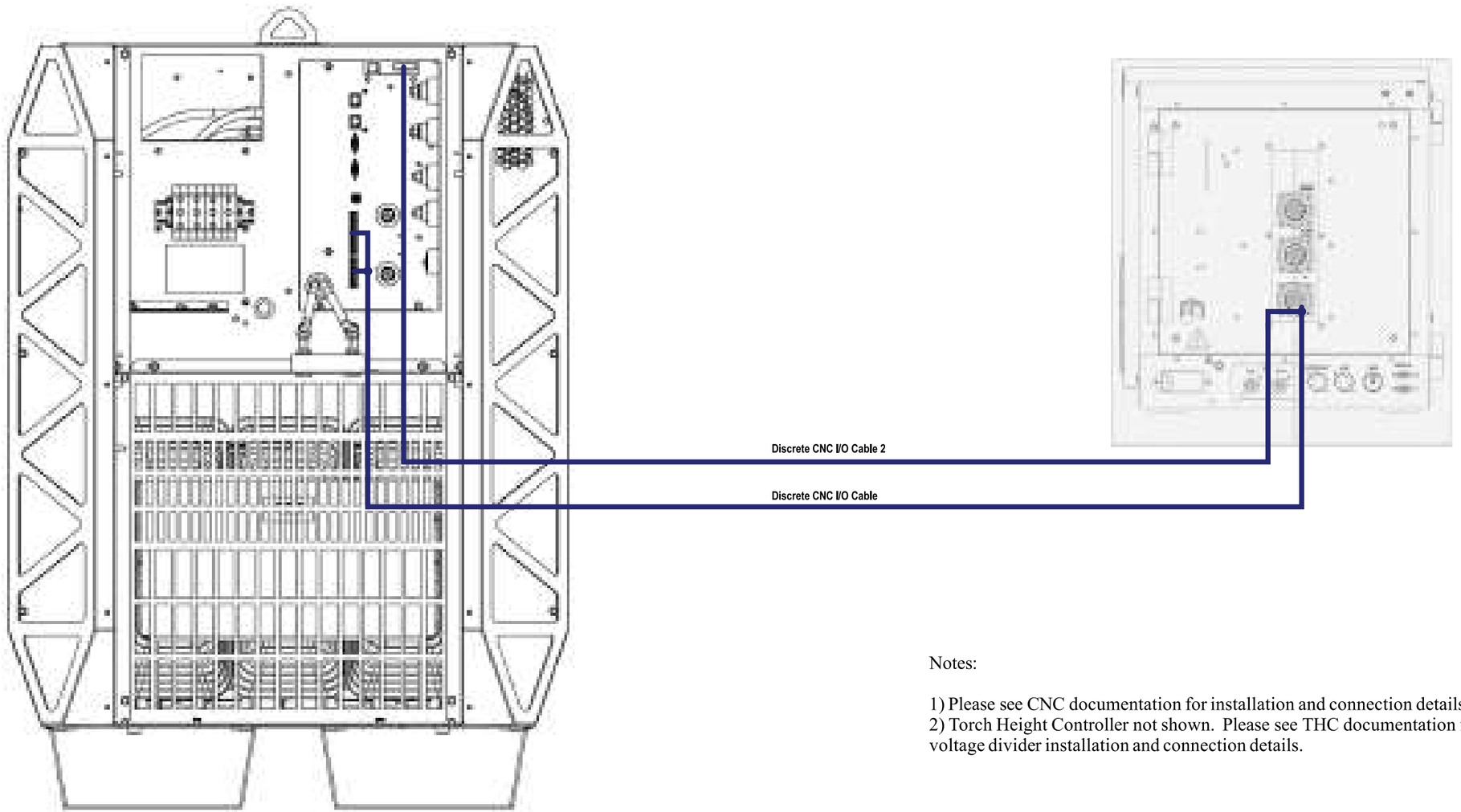


Notes:

1) Please see CNC documentation for installation and connection details.
2) Torch Height Controller not shown. Please see THC documentation for voltage divider installation and connection details.

10084356

# Wireless subsystem block diagram (Sheet 25 of 25)

This page is blank.

This page is blank.

# WiFi Subsystem Block Diagram

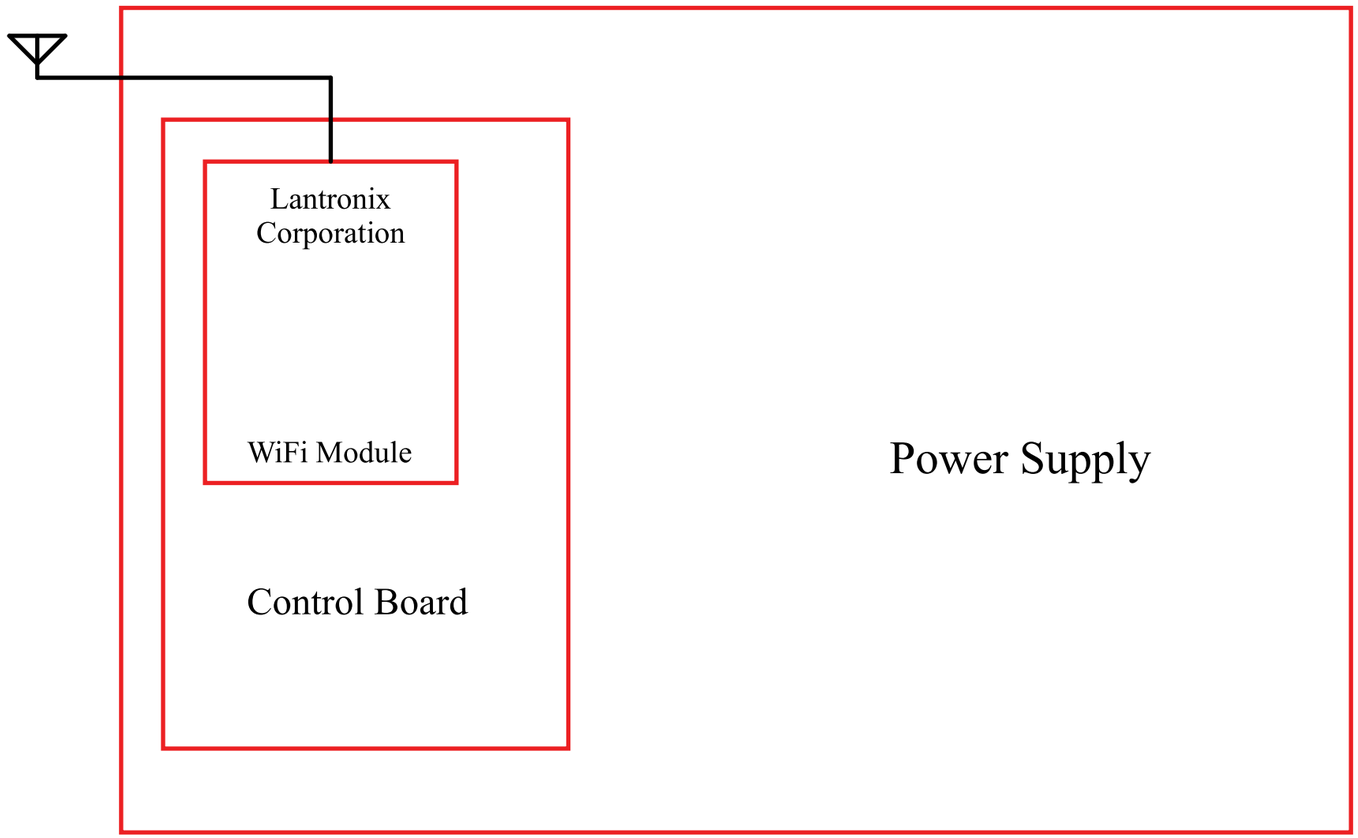


10084356

This page is blank.

This page is blank.